106010101-EQ0005, Revision 11

Equipment Specification

SNS Mercury Target Module

NEUTRON SCIENCES

DOCUMENT TITLE		DOC. NO.
SNS Mercury Target Module		106010101-EQ0005-R11
LABORATORY	**DIVISION / GROUP**	**ISSUE DATE**
ORNL / SNS	ISD / Source Dev. and Engr.	7/2016

	Signature / Date					
	REV. 9	**DATE**	**REV. 10**	**DATE**	**REV. 11**	**DATE**
Prepared by:	D. Winder	1/17/16	D. Winder	5/12/16	Drew Winder 2016.08.02 07:23:55 -04'00'	
Design Engineer:	D. Winder	1/17/16	D. Winder	5/12/16	Drew Winder 2016.08.02 07:24:10 -04'00'	
Team Lead:			M. Wendel	5/12/16	wendelmw@ornl.gov 2016.08.04 13:41:08 -04'00'	
Group Leader:			M. Wendel	5/12/16	wendelmw@ornl.gov 2016.08.04 13:41:20 -04'00'	
Engineering Manager:						
QA Representative						
Other approvals as required:	S. Parson	1/25/16	J. Janney	5/12/16	Jim Janney 2016.08.03 13:04:57 -04'00'	

REV NO.	REVISION DESCRIPTION
A	Released for solicitation and quote
B	Fixed grammatical errors and other inconsistencies
00	Issued for Construction
01	General revision, see 106010101-CR0011
02	-Added a statement in section 5.2.1 allowing for 95 RMS surface finish in A235 slots. -Modified section 5.7.1 to clearly define electropolish / passivation testing locations. Added electropolish on A234 and A222-03 -Removed eliminated part A238 from section 5.7.2 and added new part A222-03.
03	General revision, combined updated original target module specification (106010101-EQ0006), see 106010101-CR0014
04	See 106010101-CR0017.
05	See 106010101-CR0018.
06	See 106010101-CR0019.
07	See 106010101-CN0003.
08	See 106010101-CN0006.
09	See 106010101-CN0009.
10	See 106010101-CN0011. Revised for water shroud fabrication
11	See 106010101-CN0015. Revised for updated original target fabrication.

1. SCOPE

This specification defines the requirements for materials of construction, fabrication, inspection, testing, and delivery to the Company of the SNS Mercury Target Module(s), which may also be referred to as “the target module,” “the target,” or simply “the module”. There are two versions of the SNS Mercury Target Module covered by this specification, the Jet Flow Target Module (106010101-M8U-8700-A221) and the Updated Original Target Module (106010101-M8U-8700-A321). Seller shall refer to all parties responsible for providing the target module. Any minor part not specifically defined, but required for a complete module, shall be considered included herein, unless specifically excluded.

The Seller shall be responsible for the manufacturing and delivery of the target module in full compliance with this specification and supporting media. There are three forms of media which define the requirements for the module:

1. This specification,
2. A 2-D drawing package (parts, subassemblies and the full assembly), some of which include 3-D CAD models of individual parts or subassemblies, and
3. A complete 3-D CAD model.

Section 11 of this specification provides a complete list of applicable drawings.

Requirements for manufacturing, testing, geometry, inspection, materials, etc. overlap among this specification, the drawing package, and the overall 3-D CAD model. However, the requirements of all three media shall be satisfied. Therefore, conflicts between any of these media shall be submitted to the Company for resolution.

The Company will separately procure and deliver the following items to the Seller who will be responsible for installing them in the proper position on the module:

1. The pneumatic seal shown on drawing 106010101-M8U-8700-A224, which becomes part of the Water Cooled Shroud Weldment (106010101-M8U-8700-A223).
2. A Leak Detection Instrument Assembly (106010101-M8E-8700-A247) consisting of special MI cables to be mounted on the lower side of the mercury vessel and a Conductivity Probe to be mounted in a hole in the Water Cooled Shroud Mounting Flange (106010101-M8U-8700-A233).

The Company will provide electro-slag remelt (ESR) 316L stock material for use in fabricating some components which are subjected to the most intensive beam heating. The Seller will be responsible for creating the needed components from the stock material.

The Company will contract with Stony Brook University for the application of the water shroud nose coating (106010101-M8U-8700-A223). The nose coating is sprayed on at the Center for Thermal Spray Research at Stony Brook University, and was developed to luminesce in response to the proton beam to allow its measurement and alignment relative to the target. The hardware for the flame spraying operation was originally developed to spray the water shroud nose while it was mounted on a mercury vessel which was installed in a MXF3825 target shipping frame. The Seller will be responsible for mounting the water shroud in a Company supplied MXF3825 shipping frame such that it is located as it would be when installed on a target. The Company will be responsible for shipping from the Seller's site to Stony Brook and back. For scheduling purposes, the Seller shall assume this process takes one calendar week. After application, the coating must be protected from damage, dirt, cutting fluids, and other contaminants which would interfere with its ability to function.

The Company will separately procure the Detector Assembly (106010101-M8U-8700-A259), which becomes part of the Burst Disk Target Leak Detector (106010101-M8U-8700-A250). The Burst Disk Target Leak Detector is the responsibility of the Seller, but the Company will install the Detector Assembly at SNS after receipt of the Target Module.

The Company will install sensors onto the mercury vessel before the assembly with the water shroud. These sensors are used to measure the performance of the target, and will vary from target to target. The Seller will be responsible for mounting the mercury vessel in a suitable shipping frame for shipment to the Company site for installation of the sensors. The Company will be responsible for shipping from the Seller's site to the Company's site and back. For scheduling purposes, the Seller shall assume this process takes two calendar weeks. After installation, the sensors must be protected from damage, dirt, cutting fluids, and other contaminants.

If any of these components or material need to be replaced as a result of damage inflicted by the Seller;

1. The replacement parts must be obtained from the Company, and
2. The Seller shall be responsible for all cost incurred by the Company in supplying the replacement parts to the Seller.

Any exceptions to this specification shall be clearly noted as such in Seller's quotation.

2. INTRODUCTION

The Spallation Neutron Source (SNS) produces neutrons by the injecting a high energy proton beam into a mercury target. The complete SNS target assembly is comprised of 1) a target module which is mounted on 2) a target carriage that moves on and is propelled by 3) the

carriage transport system; and 4) process loops for supplying mercury, water, nitrogen, helium, and vacuum pumping to the target module. The target module is subjected to the highest level of nuclear activity and therefore must be replaced periodically.

As shown on Drawing 106010101-M8U-8700-A221 (Jet Flow) or 106010101-M8U-8700-A321 (Updated Original), the target module is an assembly of stainless steel vessels approximately 85 inches long weighing approximately 2600 lbs. (without fluids) extending in both directions from a flange approximately 25 inches in diameter. To function efficiently, the target module must be installed with small clearance gaps to surrounding components. As a consequence, the target module must be manufactured and assembled with a great degree of precision to insure that its external shape is within allowed dimensional tolerances while preserving the size of the internal channels and components. No feature shall be considered inconsequential to the ability of the module to perform as required.

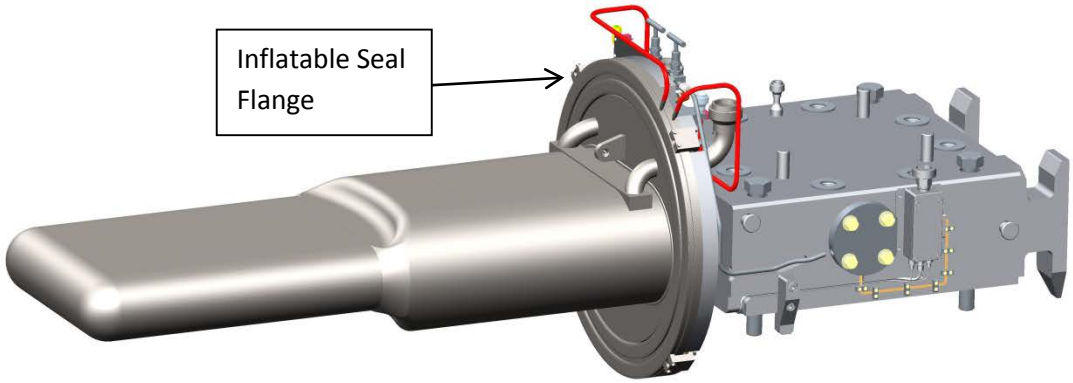

Figure 1 – Target Module

In front of the inflatable seal flange, the module is comprised of two concentric vessels, an inner vessel for containing the target mercury and an outer vessel for containing mercury that may leak from the inner vessel. These vessels are formed by welding together a series of components as identified on drawings A222/A322 and A223 (unless otherwise shown, the drawing numbers used hereon in this Specification are preceded by “106010101-M8U-8700-” on the referenced drawing). Upon completion, the Water Cooled Shroud (A223) is bolted to the Mercury Vessel (A222/A322). The Water Cooled Shroud is sealed to the Mercury Vessel with an all metal seal, called the Bolt on Shroud Seal (A243). In previous target module designs, the Water Cooled Shroud was welded to the Mercury Vessel.

The Jet Flow and Updated Original Target Modules are externally nearly identical; however, the internal passages of the mercury vessel are different for the two target modules to allow the Jet Flow to produce an extra jet of mercury wrapping around the inside of the mercury vessel inner window. The Water Cooled Shroud is identical for both target module designs. Analogous parts between the two designs are differentiated only by the 2 (Jet Flow) or 3 (Updated Original)

following the A in the drawing number. As in the previous paragraph, analogous parts referenced in this specification shall include both drawing numbers in the following format: A2XX/A3XX.

The forward–most section of both vessels receives a high nuclear heating load from the incident proton beam and the neutrons which are produced by proton beam interactions with the mercury. Consequently, these sections are constructed with double walls so that coolant flow can be provided in the gaps between the walls. The walls of the inner vessel, referred to as "the mercury (Hg) vessel", are cooled by flowing mercury while the outer vessel is cooled by water, resulting in it being named the "water cooled shroud". The mercury used to cool the walls of the mercury vessel is supplied separately from that in the main flow, but unites with the main flow at a point inside the module for the return to the cooling loop. In addition, the Jet Flow design (A221) adds an additional supply of mercury to the base of the inner Hg vessel window. This flow is designed to cool and protect the inner window from cavitation damage.

The jet-flow targets also include a gas injection system which provides gas from a supply port on the back of the target into the mercury flow. The gas bubbles in the mercury flow are intended to reduce the severity of the pressure pulse experienced by the mercury vessel in response to the near instantaneous beam loading.

The Company supplied gas actuated inflatable seal shown on drawing A224 is attached to the front face of the flange for sealing the target module to an entrance hole in the vacuum vessel when the module is in its operational position inside the vessel. The rear section of the module is a block of stainless with machined internal passages that direct the flowing mercury into the respective passages in the forward mercury vessel. Concentric knife edges are machined into the lower surface of the rear sections for sealing mercury passages with soft iron gaskets.

The water and gas lines on the module as well as the nitrogen, helium, and vacuum lines needed to operate the seals are connected to the respective utility lines on the carriage by demountable jumpers. Other jumpers connect the carriage to points on the target module used for venting the mercury lines during filling and for interfacing to instrumentation installed on the target module. As such, all connectors on the target module must be properly positioned per the drawings so that the jumpers will interface properly.

3. APPLICABLE SPECIFICATIONS, STANDARDS, CODES, AND DEFINITIONS

The following documents and addenda are a part of this specification to the extent specified herein. The issue of a document in effect on the date of the request for proposal, including any amendments also in effect on that date, shall apply unless otherwise specified. Where the

specification appears to conflict with the requirements of a reference document, such conflicts shall be brought to the attention of the Company for resolution.

3.1 American Society for Testing and Materials (ASTM)

ASTM A182, Standard Specification for Forged or Rolled Alloy-Steel Pipe Flanges, Forged Fittings, and Valves and Parts for High-Temperature Services.

ASTM A193, Standard Specification for Alloy-Steel and Stainless Steel Bolting Materials for High-Temperature Service ASTM A 193/194 (Bolts & Nuts for high temperature service)

ASTM A194, Standard Specification for Carbon and Alloy Steel Nuts for Bolts for High Pressure or High Temperature Service, or Both.

ASTM A213, Standard Specification for Seamless Ferritic and Austenitic Alloy-Steel Boiler, Superheater, and Heat Exchanger Tubes.

ASTM A240, Standard Specification for Heat-Resisting Chromium and Chromium-Nickel Stainless Steel Plate, Sheet, and Strip for Pressure Vessels.

ASTM A262, Practices for Detecting Susceptibility to Intergranular Attack in Austenitic Stainless Steels.

ASTM A276, Specification for Stainless Steel Bars and Shapes.

ASTM A312, Standard Specification for Seamless and Welded Austenitic Stainless Steel Pipes.

ASTM A380, Standard Practice for Cleaning, Descaling, and Passivation of Stainless Steel Parts, Equipment, and Systems.

ASTM A473, Standard Specification for Stainless Steel Forgings.

ASTM A479, Standard Specification for Stainless Steel Bars and Shapes for Use in Boilers and Other Pressure Vessels.

ASTM A480, Standard Specification for General Requirements for Flat-Rolled Stainless and Heat Resisting Steel Plate, Sheet, and Strip.

ASTM A484, Standard Specification for General Requirements for Stainless Steel Bars, Billets, and Forgings.

ASTM A666, Standard Specification for Annealed or Cold Worked Austenitic Stainless Steel Sheet, Strip, and Flat Bar.

ASTM A745, Standard Practice for Ultrasonic Examination of Austenitic Steel Forgings.

ASTM E165, Test Method for Liquid Penetrant Examination.

ASTM E493, Standard Practice for Leaks Using the Mass Spectrometer Leak Detector in the Inside-Out Testing Mode.

ASTM E498, Standard Practice for Leaks Using the Mass Spectrometer Leak Detector or Residual Gas Analyzer in the Tracer Probe Mode.

ASTM E499, Standard Practice for Leaks Using the Mass Spectrometer Leak Detector in the Detector Probe Mode.

ASTM B912 Standard Specification for Passivation of Stainless Steels using Electropolishing.

3.2 American Society of Mechanical Engineers (ASME)

ASME Boiler and Pressure Vessel Code, Section II, (Latest Edition), Material Specifications.

ASME Boiler and Pressure Vessel Code, Section VIII, Division 2 (Latest Edition), Pressure Vessel.

ASME Boiler and Pressure Vessel Code, Section V, (Latest Edition), Nondestructive Testing.

ASME Boiler and Pressure Vessel Code, Section IX, (Latest Edition), Welding and Brazing Qualifications.

ASME B18.2.1, Square and Hex Bolts and Screws, Inch Series

ASME B1.1, Unified Inch Screw Threads

ASME SA-240, Standard Specification for Heat-Resisting Chromium and Chromium-Nickel Stainless Steel Plate, Sheet, and Strip for Pressure Vessels.

ASME SA-965, Standard Specification for Steel Forgings, Austenitic, for Pressure and High-Temperature Parts.

3.3 American Society for Nondestructive Testing (ASNT)

SNT-TC-1A, Personnel Qualification and Certification in Nondestructive Testing.

3.4 American Welding Society (AWS)

AWS Specification A5.9, Specification for Bare Stainless Steel Welding Electrodes and Rods.

AWS QC1, Standard for AWS Certification of Welding Inspectors.

3.5 SAE International

AMS2759, Heat Treatment of Steel Parts, General Requirements

AMS2759/4, Heat Treatment Austenitic Corrosion-Resistant Steel Parts

4. TECHNICAL REQUIREMENTS

4.1 General

4.1.1 As discussed in the scope section, the requirements for the target module are defined by 2-D drawings, 3-D CAD models, and this specification. Any discrepancy between these media shall be presented to the company for resolution prior to proceeding.

4.1.2 It is understood that the Seller will make manufacturing and process drawings for various machining and welding stages required to complete the target module. In many cases, finish machining must not be completed until a subsequent operation (i.e. welding) is completed. Specific directions for where and when to leave stock material is not specified by the Company, but rather left to the Seller to determine the best process.

4.2 Materials of Construction

4.2.1 Target Module Materials

Except as specified on Engineering Drawings, the target module shall be constructed of 316L stainless steel. All stainless steel materials shall be in accordance with Section II of the ASME Code and the following specifications. The 2-D drawings specify the type of material for each component (plate, forging, tube, pipe, etc.).

Full documentation of the, Certified Material Test Reports (CMTR), and the Manufacturer's Certification of Solution Anneal shall be submitted to the Company in accordance with Specification Section 9 for all target module materials. Materials shall be completely traceable to the parts made from them.
Where material is shown on drawings as 316/316L material, the material shall be dual certified as both 316 and 316L.

4.2.2 316L Finished Plate Material

Components specified as 316L plate per ASME SA-240 shall also conform to ASTM A480 and ASTM A666.

4.2.3 Electro Slag Re-melt Material, Supplied by the Company

The inner and outer windows of the mercury vessel (A222-02/A322-02 and A227/A337) and water cooled shroud (A229 and A230) and the mercury vessel front body (A235/A335) shall be made from ASTM A240 plate material that has undergone an electro slag re-melt procedure. This process is specified in order to improve the quality of material and eliminate inclusions. Post-irradiation examination of early target modules has revealed significant inclusions in plate material that affect material properties (ductility and strength) and susceptibility to cavitation damage.

Due to difficulty in obtaining appropriate quantities of this material for individual target modules, the plate material for these four components will be supplied by the Company.

4.2.4 Low Sulfur Plate Material

The water cooled shroud front sleeve (A228) shall be made from ASME SA-240 plate material specifically selected to have low sulfur content (.005% max.). Low sulfur content plate reduces the severity of inclusions in the plate.

4.2.5 Grain Orientation

The grain orientation (rolling direction) of plate material is critical for the front section of the Mercury Vessel. Specifically, the Mercury Vessel Front Body (A235/A335), Inner Window (A222-02/A322-02), and Outer Window (A237/A337) parts require a specific grain orientation. For these three parts, the rolling direction of raw plate material must be parallel to the majority of the part's thin walls. Figures 2 and 3 demonstrate the required rolling direction for these parts. Certification of the grain orientation requirement shall be included with CMTRs for affected parts and submitted per section 9.

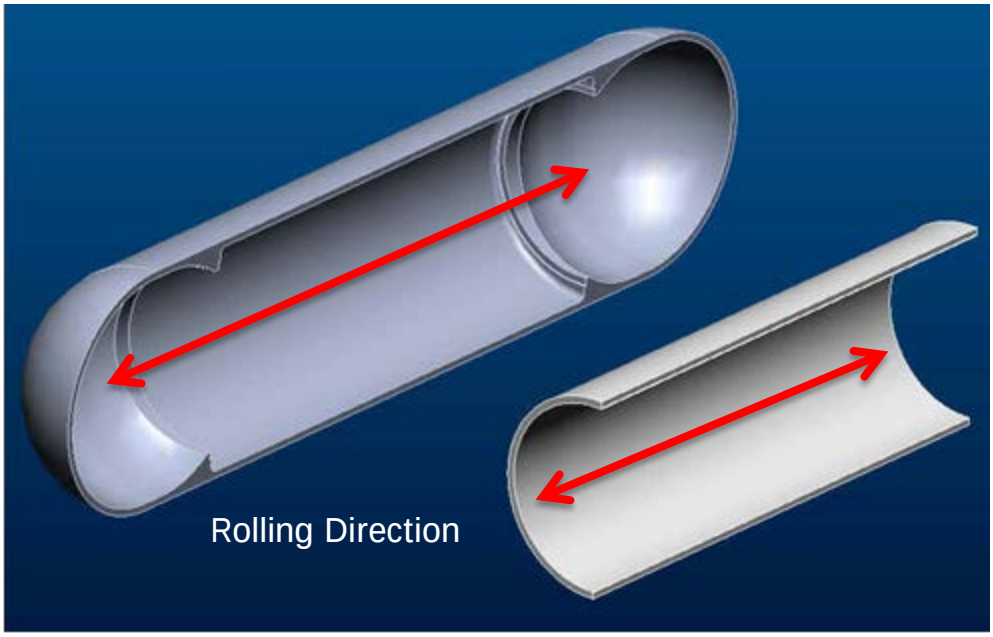

Figure 2 – Rolling Direction for Mercury Vessel Windows (A237/A337 and A222-02/A322-02)

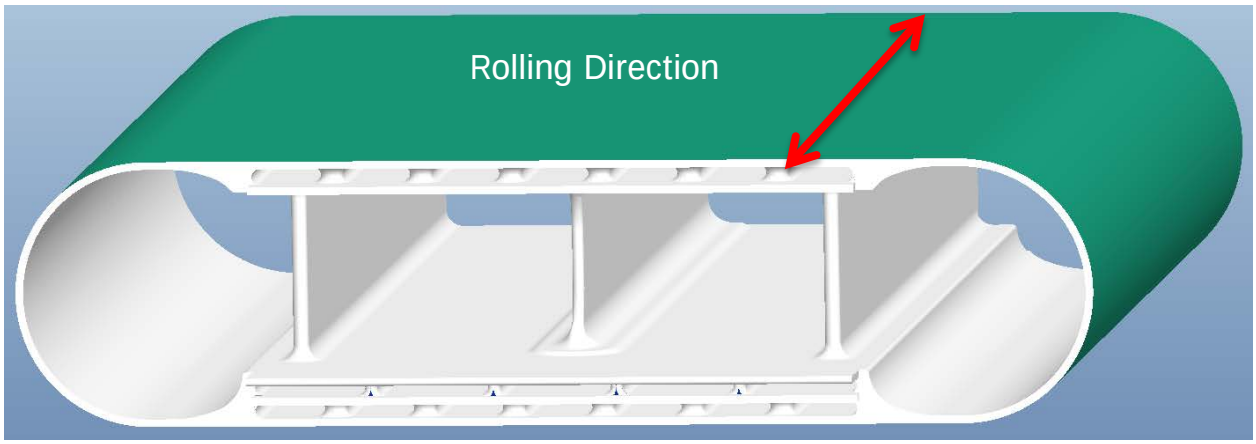

Figure 3 – Rolling Direction for Mercury Vessel Front Body (A235/A335)

4.2.6 Hot Iso-static Pressing

Plate material that finished the rolling process at 4 inches thick or greater shall be Hot Iso-static Pressed (HIPed) prior to final machining. Experience gained in the production of early target modules has shown that this thickness of plate is subject to porosity on the central plane. Testing conducted by the company has shown that this porosity can be removed by HIPing the plate at 2,075 +/-25 degrees Fahrenheit at 15,000 +/- 500 psi for 3-5 hours provided a minimum of 0.25" sacrificial stock (i.e. stock that is to be removed after HIPing) is provided on all surfaces during the HIPing process.

Coupons from each batch of HIPed material shall be provided. A batch shall be considered each heat of material in each furnace heating. Two coupons each shall be taken from the top 1/3, center 1/3, and bottom 1/3 of the plate material. One set of coupons shall be from before HIP to provide a baseline, and the other shall be from the material after HIP. The size of each sample shall be not less than a 1/2-inch cube. Samples must be suitable for mounting and polishing to allow examination with an optical microscope at 50x to 100x magnification.

Unless otherwise approved by the Company, only plate material used to make the Hg Vessel Front Body (A235/A335) and the Water Shroud Front Body (A228) shall be HIPed. The beam entrance window plate material shall not be HIPed. If plate material is used for larger section parts that are otherwise produced from forgings, approval by the Company is required.

The Seller shall submit a plan for the HIPing prior to use. Alternate process or HIPing parameters shall be submitted to the Company for approval.

4.2.7 Bar, Shape, and Forged Material

Components manufactured from forged material shall be grade F-316L conforming with ASTM A182, ASTM A473, ASTM A479, ASTM A484, ASME SA-965.

All forgings shall be ultrasonically inspected in accordance with ASTM Standard Practice A745, Ultrasonic Examination of Austenitic Steel Forgings. The quality level of

examination shall be QL-1 and QA-1, for straight beam and angle beam, respectively. Test documentation shall be submitted to the Company in accordance with Specification Section 9.

4.2.8 Tube and Pipe Material

The tubes shall be manufactured from 316L stainless steel conforming to ASTM A213. The piping shall be manufactured from 316L stainless steel conforming to ASTM A312.

4.2.9 Elastomeric, Polymeric, and Resin Materials

Elastomeric, polymeric and resin materials shall not be used.

4.2.10 Fasteners

The target jacking bolts will require manipulation after installation and are subject to galling. They shall be produced from Nitronic 60 material ASTM A193, Grade B8S; ASTM A194, Grade 8S; or ASTM A479, UNS S21800.

Alternative non-galling stainless steel alloys may be proposed, subject to approval by the Company. All mechanical components, fasteners, and associated hardware shall be completely free of scale and have a bright finish.

4.2.11 Seal Ring Material

The seal rings shall be made of ARMCO® pure iron in the fully annealed condition. Per the 2-D drawing, minimum iron content is 98%, although it will likely be much higher.

4.2.12 Corrosion Evaluated Material

All stainless steel materials which will be wetted by mercury or water during operation shall be Corrosion Evaluated Material (CEM). Herein, CEM refers to materials that have been subjected to oxalic acid testing per ASTM A262 Practice A. Two specimens, taken from representative samples from each size and heat number of finished product, shall be evaluated.

Specimen preparation shall conform to the applicable section of ASTM A262 for each test. Each test specimen shall be marked for identification prior to removal from the parent material. Specimens shall pass Practice A if the results are as defined as acceptable in Table 3 of ASTM A262 for 316L. Material that does not pass Practice A as defined here will not be accepted by the Company.

(CEM) corrosion test reports accompanied by two sets of microscope image photographs representing areas on each specimen shall be submitted to the Company in accordance with Specification Section 9.2.

4.2.13 Lubricants

Oil and grease lubricants shall not be used except where specifically allowed on drawings. Graphite or molybdenum disulfide dry film lubricants are acceptable.

4.2.14 Tooling & Inspection Fixture Materials

Tooling and fixtures may be manufactured from a combination of carbon, aluminum, and stainless steel. All areas in contact with surfaces of the fixtured part shall be stainless steel or aluminum. Carbon steel surfaces shall be completely sealed with two coats of epoxy resin paint or Company approved equivalent. Care shall be taken to protect all stainless steel surfaces from iron contamination. (Reference Specification Section 5.4)

4.2.15 Serialization

Each target module mercury vessel and water shroud shall be assigned a unique serial number assigned by the company at the start of the contract. Assembled targets (A221/A321) shall use the mercury vessel serial numbers. The serial numbers shall be used for traceability of all activities related the production of that particular component, including procurement of raw material, manufacturing, and results of testing, and inspections. The serial number(s) of affected items shall be included on all documents submitted to the company.

4.2.16 Archive Material

A piece of archive material (at least ½ inch by 3 inch by 4 inch) shall be provided for future reference from each heat of material used to create the components below. It may be obtained from an EDM drop or other process, but it must be subjected to the same heat treating, dimensional stabilization, or HIPing processes as the final part. This archive material piece shall be marked with the heat number. The pieces of archive material shall be delivered to the Company.

1. Water-cooled shroud transition piece (A227)
2. Water-cooled shroud front sleeve (A228)
3. Mercury vessel transition body (A234/A334)

5. MANUFACTURING

5.1 Machining

Some of the target module assembly parts have complex surface contours that may be difficult to understand using the engineering drawings only. Therefore, to aid in understanding of the target module components and weldment/assemblies, the 3-D models will be available for use by the Sellers. For manufacturing of parts with complex surface contours, use of CNC machining using the 3-D models as the input file is acceptable. However, the Seller must be cognizant that it may be necessary to leave material stock on several surfaces during individual part and subassembly machining in order to maintain post weld assembly dimensional tolerances. The Company does not specify where and when to leave stock material. This process is the Seller's responsibility. The only exception to this is for final mating surfaces controlling the fit-up of the mercury vessels and water-cooled shrouds. When the vendor is responsible for providing only these individual components and not the completed target modules, the planned range of stock material be left shall be submitted for approval per Section 9.2 and the actual amount of stock shall be submitted as certified data per Section 9.3.

5.2 Surface Finish / Machining Techniques

5.2.1 Surface Finish

The global surface finish requirement across the target module is 64 RMS or better. However, a 32 RMS or better finish is required for the following part regions:

1. All surfaces of the four (4) large passages in the HG Vessel Front Body (A235/A335). The interior surfaces of the .240” tall slots in this part do not require mechanical polishing following wire EDM. However, care should be taken in the wire EDM process to achieve the best possible surface finish.
2. All surfaces of the Hg Vessel Inner Window (A222-02/A322-02)
3. The mercury facing surfaces of the Hg Vessel Outer Window (A237/A337)

A surface finish of 95 RMS is acceptable in the (19 or 14) .240” tall slots in the mercury vessel front body.

5.2.2 Electrical Discharge Machining (EDM)

Wire and Plunge EDM machining is allowed on target module internal and external parts within the Target Module. No further surface treatment is required on wire EDM parts, except as noted in this section and in sections 5.2.1 and 5.7. However, EDM shall not be used as the final pass machining technique in the three (3) locations listed below. EDM may be used for rough machining in these locations, but it must be followed by a conventional technique such that the EDM heat affected zone (HAZ) is eliminated from the finished surface.

1. Either side of the Hg Front Body (A235/A335) center baffle as shown below in red.

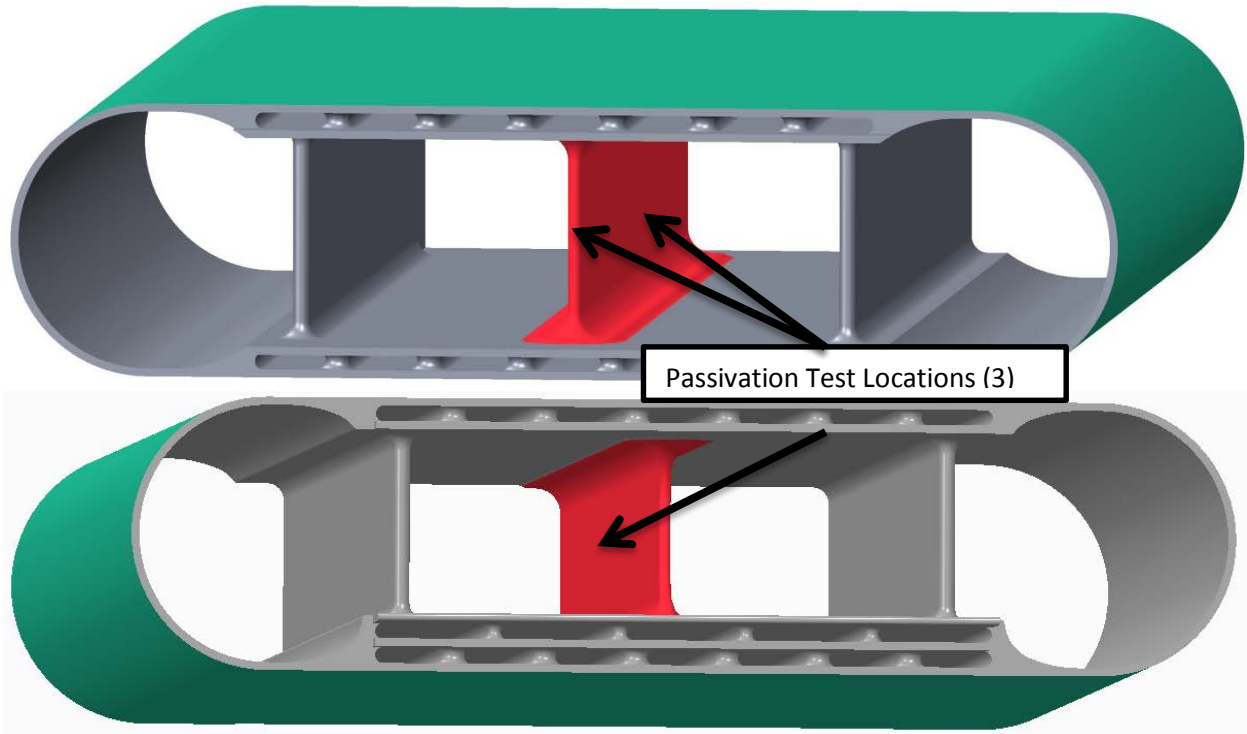

2. The outer surface of the Inner Hg Vessel Inner Window (A222-02/A322-02) as shown below in red.

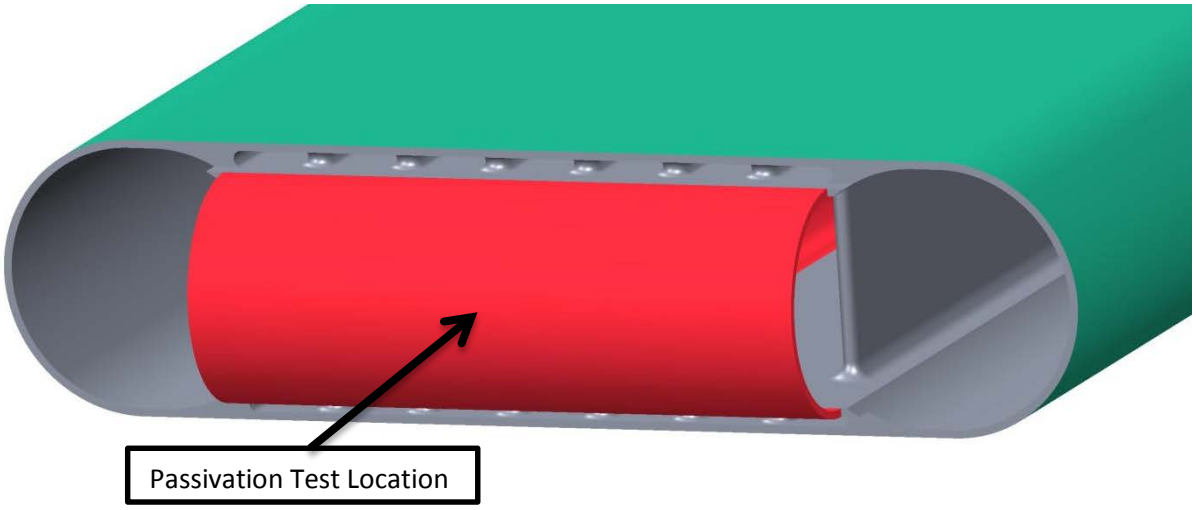

3. The inner surface of the Inner Hg Vessel Inner Window (A222-02/A322-02) to a height of 2.4 inches as shown below in red.

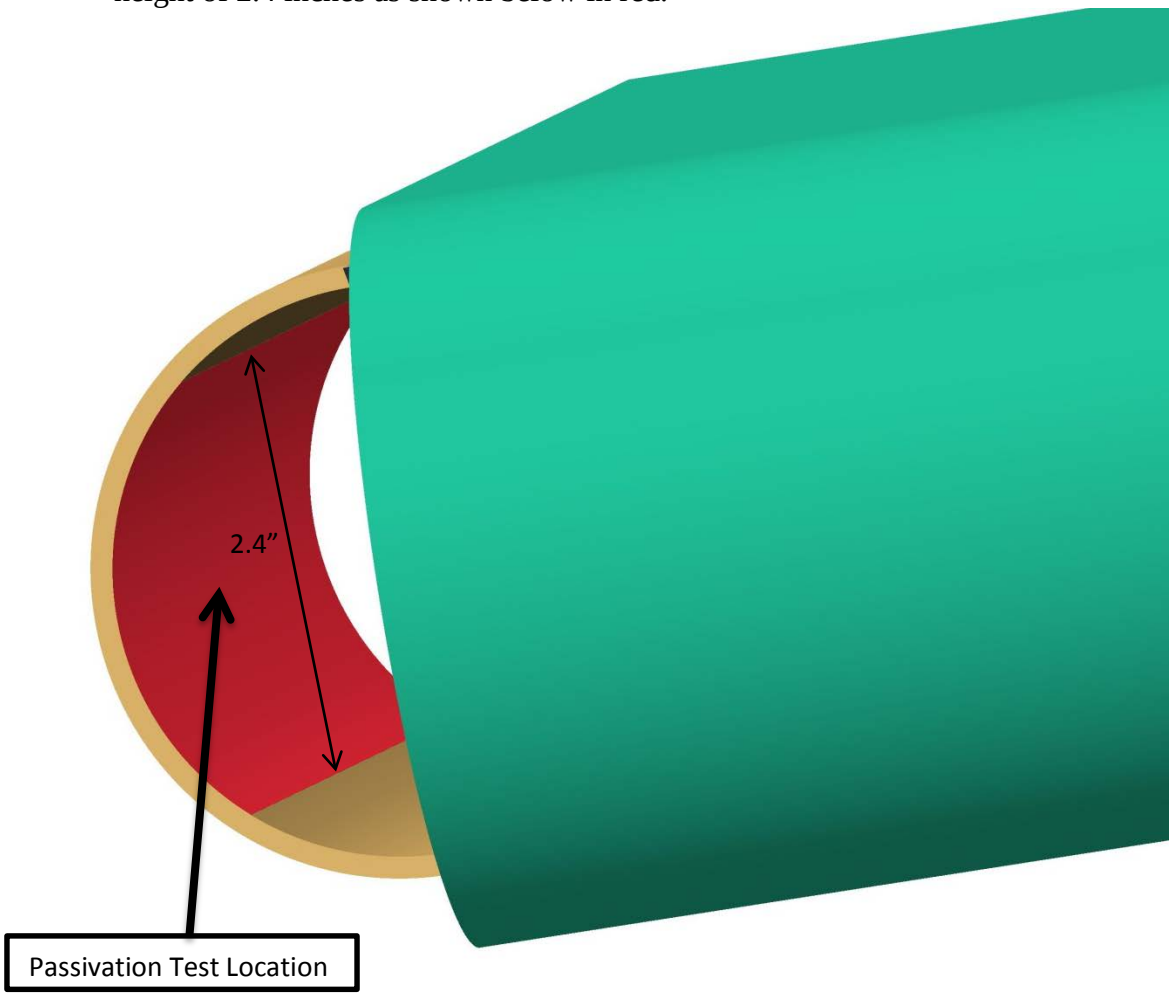

5.3 Welding

5.3.1 General

The Sellers welding program, job specific welding procedures and job specific procedure qualification records shall be submitted in accordance with Section 9.

The Company reserves the right to establish hold points for inspection and to witness all welding operations.

5.3.2 Target Module Welding

All welding on the target module shall be performed using procedures qualified per ASME Boiler and Pressure Vessel Code, Sect. VIII Division 2, except the following:

- Resistance spot welds on drawings 106010101-8700-M8U-A222/A322,
- 106010101-M8U-8700-A203 welds may be by ASME BPVC or AWS D1.6,
- 106010101-M8U-8700-A204 welds may be by ASME BPVC or AWS D1.6,
- 106010101-M8U-8700-A209 welds may be by ASME BPVC or AWS D1.6,
- 106010101-M8U-8700-A217 welds may be by ASME BPVC or AWS D1.6, and
- 106010101-M8U-8700-A222 tack welds shown in Section P-P to aid assembly need not be qualified.

The 2-D drawing package specifies weld joint type, geometry, size, and finishing. The Seller may modify the detailed weld joint configuration as required per its preferred manufacturing technique. However, all weld joint configuration modifications must be submitted to the Company per Section 8.2.

Electron beam weld specifications on the engineering drawings shall not be replaced with other welding process without approval of the Company. Electron beam welding is the preferred choice for welding of the critical precision target module components.

Electron beam welds are critical to the reliable life of the target. As such, they are subject to strict control. The welding process used shall be documented, with the actual location of tacks, weld pass direction, starts, stops, and overlaps recorded, documented, and provided with the examination report for each weld.

The joint fit-up for the electron beam welds are also critical. The max gap of the square groove butt joints shall not exceed the values shown below (based on AWS D17.1). For welds of varying thickness or double wall welds, the thickness used for determining the allowable gap for the entire weld joint shall be the smallest of the minimum thickness of any point of the weld or thinnest individual wall. The gap opening shall be measured after any tack welding and provided with the examination report for each weld.

Base Metal Thickness (inches)	*Max Gap (inches)*
≤0.200	0.005
0.201-0.400	0.008
>0.400	0.010

The offset of the joint shall also be measured after tacking but before electron beam welding. The measurements of offset shall be provided with the examination report of each weld.

The maximum mismatch of the electron beam square groove butt joints after welding shall not exceed the values below. The thickness is based on the thinner member. The mismatch shall be measured before any post-weld benching or smoothing and provided with the examination report for each weld.

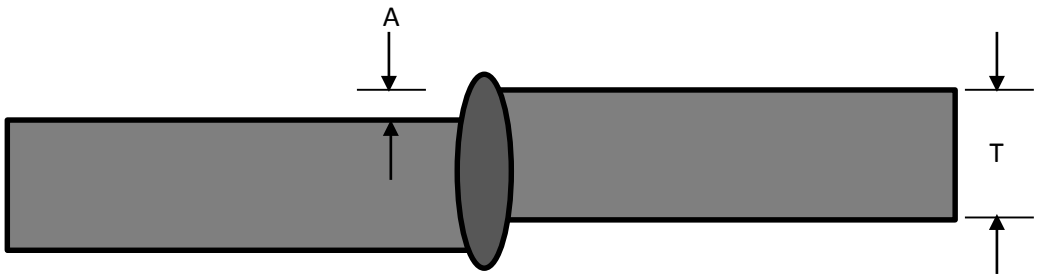

Base Metal Thickness, T (inches)	*Max Mismatch, A (inches)*
≤0.125	0.013
0.126-0.250	0.025
>0.250	0.030

Underfill of EB welds may be corrected by GTAW welding without completing the NCR process of Section 8.3; however, initial and final amounts of underfill and locations of GTAW welding shall be documented on the weld inspection submittal.

The target module is subjected to cyclic loading. Post welding, the accessible surfaces of electron beam welds shall be ground smooth. Transitions must have a minimum 3:1 taper. Concavity of accessible EB butt weld surfaces is not acceptable. Post welding smoothing of such welds shall not reduce the thickness at any point beyond the value of the minimum material thickness – maximum mismatch. For example, for a weld with member thicknesses 0.120 inch ± 0.005 inch, the minimum material thickness after smoothing is 0.102 inch (0.120 - .005 - .013 inch). GTAW welding may be used to provide additional material if needed.

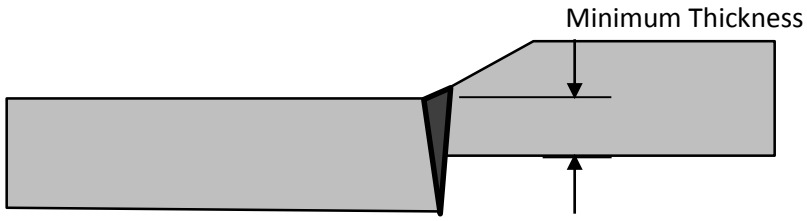

The Shielded Metal Arc Welding (SMAW) process and the short circuit Gas Metal Arc Welding (GMAW) process shall not be used.

All grooved or butt type pressure boundary welds shall be full penetration as defined on the engineering drawings. The minimum weld size of all fillet welds that are pressure boundary welds shall be no less than the specified dimension on the drawings. Consumable inserts shall not be used. Backing strips shall not be used.

Where material is cut using a high temperature process, edge material shall be removed past the heat affected (sensitized) zone by mechanical means (e.g. grinding) to achieve final dimensions before welding. Mechanical removal shall be performed in a manner to minimize the heating of the metal.

5.3.3 Weld Filler Metal

Weld filler metal used for welding 316L shall conform to the following requirements:

SPECIFICATION REQUIREMENTS:

-Bare Stainless Steel Welding Electrodes and Rods per AWS A5.9.
-Lot Classification: S4 (per AWS A5.01 or ASME SFA-5.01)
-Level of Testing: Schedule I (per AWS A5.01 or ASME SFA-5.01)
-Material Test Report (MTR): On each Purchase Order the Vendor shall supply a MTR for each heat of filler material supplied.
-Delta Ferrite: Minimum delta ferrite of 5 ferrite number.
-10CFR21 reporting requirements.

MANUFACTURER/SUPPLIER TEST AND CERTIFICATION REQUIREMENTS:
The MTR shall include Item descriptions as noted in Specification Requirements above and results of tests specified in AWS A5.01 or ASME SFA-5.01 for Schedule I level of testing. The report shall be signed by a representative of the material manufacturer, material supplier, or agency conducting the actual tests.

PACKAGING/IDENTIFICATION/HANDLING REQUIREMENTS: Packaging and identification shall be per the requirements of AWS A5.9. In addition, each straight length of welding rod, 1/16” diameter and larger, shall be marked with the material classification. The heat number shall be marked on each unit package of welding materials. Each unit package shall be delivered in the manufacturers unopened packaging. Damaged packaging, other than minor scratches and dents that would not affect the welding materials, will not be accepted.

Weld Filler Material Certification documentation shall be submitted to the Company in accordance with Specification Section 9.2.14.

5.3.4 Qualification of Welders

Welding personnel performing work on the target module shall be qualified in accordance with ASME Boiler and Pressure Vessel Code Section IX. Welder performance qualification certifications shall be submitted in accordance with Specification Section 9.2.5. The Seller shall provide documentation to the Company that identifies the welders responsible for work on the module. If necessary, welders may be assigned a unique traceable symbol for this purpose.

5.3.5 Weld Plugs

The Water Cooled Shroud (WCS) Rear Sleeve (A226) and the WCS Transition Piece (A227) have .125” diameter cross drilled holes that provide cooling water passages. In addition, the WCS Transition Piece (A227) has a series of .281” diameter holes that form small plenums, which allow cooling water access to the .125” cross drilled holes in the part.

All of these holes shall be sealed at the exterior of the part. The drawing package and 3-D models show single-body parts with these holes sealed off. In practice, these holes shall be sealed via GTAW. The locations for the seal welds are specified in the respective 2-D drawings. The .125” holes shall be sealed with weld filler metal only.

The .281” diameter holes may be sealed with filler metal or by welding in place a .281” diameter plug.

The details of the plug welding process, including weld size/depth, timing of the welding in relation to machining steps, and finished configuration, shall be developed by the Seller. The Seller shall submit a plug welding plan to the Company for approval prior to performing this operation per Section 9.2.12.

Plug welds for .125” holes are partially exempt from the requirements to submit a non-conformance report in accordance with Section 8.3. These welds may be repaired before machining water side channels as needed without submitting a non-conformance and obtaining approval. All information on the repairs including information on the failed inspections and subsequent acceptable inspections shall be submitted with the final weld submittal.

5.4 Material Handling

All expendable tooling (saw blades, files, cutters, grinding wheels, wire brushes, grinding burrs, etc.) used in the manufacture of the target module shall be unused at the start of the process and shall not have come in contact with or contain carbon steel or water-soluble halide containing materials. Any lubricants, cutting fluids, or chemicals to be used in the manufacturing process shall be free of water-soluble halides (<50 ppm) and shall be approved by the Company prior to the start of fabrication. A list of fluids shall be submitted as part of the cleaning procedure in accordance with Specification Section 9.

Materials used in fabrication shall not come in contact with lead, zinc, cadmium, copper, or water-soluble halides (<50 ppm). The Seller shall handle and perform work on stainless steel in accordance with the precautions of ASTM A380, Section 8.1, to minimize the potential for iron contamination. All contaminated areas shall be removed prior to operations involving heating.

NOTE: An exception to the copper contact exclusion will be allowed in the case of grounding contacts during electropolish and welding.

The gas injection system uses precision micro-orifices to supply controlled flow of gas into the mercury flow during target operation. The small holes in the micro-orifices have the potential to be clogged with debris. The orifices shall be protected during welding or machining operations. All gas supplied to the orifices including gas supplied for testing shall be filtered through a 15-micron filter.

5.5 Workmanship

All surfaces shall be free of mill scale, corrosion, slag, weld spatter, gouges, arc strikes, hammer marks and similar defects. Stains that are visually detectable shall be removed and cleaned.

Exterior edges and corners shall be broken to a minimum of 1/32” chamfer, or as noted on the Engineering Drawings.

Material found to be defective or not meeting specification requirements due to stock material defects, machining mistakes, or weld distortion shall not be repaired by welding without prior approval from the Company via the non-conformance process outlined in Section 8.3.

5.6 Cleaning

The Seller shall control the methods of receiving, storing, handling, testing, and preparation; and shall clean the materials to assure that all components are free of surface deformities, scale, corrosion, water, rust, oil, grease, and other deleterious foreign material prior to fabrication.

Parts to be EB welded shall be clean when placed in the vacuum chamber to avoid contamination of the chamber and insure the quality of the weld. Specific cleaning requirements shall be compliant with the EB welding subcontractor chosen by the Seller.

Parts which supply gas to the small orifices of the bubbler shall be clean to prevent orifice clogging or damage. Individual components shall be cleaned to ASTM G131 as noted on their drawings. Handling of the components shall be in accordance with the gas supply cleaning and handling procedure.

5.6.1 Cleaning Procedure

The Seller shall submit a cleaning procedure in accordance with Specification Section 9. The procedure shall conform to, or exceed the requirements of ASTM A380.

The Seller shall submit a gas supply cleaning and handling procedure in accordance with Specification Section 9. The procedure shall note how cleanliness of the gas supply system will be maintained. This may include bagging or handling requirements to prevent introduction of contaminants after cleaning, or controls in place during fabrication steps to ensure cleanliness.

5.6.2 Cleaning Agents

The Seller shall use only solutions free (<50 ppm) of water-soluble halides, such as unused or redistilled acetone or deionized water (water with a resistivity of no less than 1.5 Mohm-cm) as cleaning agents.

An exception may be made regarding water soluble halogens for pickling solutions, provided that the material pickled is subsequently thoroughly rinsed with deionized water (water with a resistivity of at least 1.5 Mohm-cm). Rinsing will be considered acceptable when the resistivity of the final water rinse is at least 1.5 Mohm-cm as verified by documented testing submitted for Company approval in accordance with Specification Section 9.

5.7 Surface Treatments and Coatings

5.7.1 Electropolish

The following mercury vessel components / subassemblies shall be electropolished:

1. Hg vessel (A222/A322) partial weldment consisting of the Hg vessel front body (A235/A335) welded to the Hg vessel inner window (A222-02/A322-02).
2. Hg vessel outer window (A237/A337)
3. Hg vessel transition body (A234/A334)
4. Hg vessel cover plate (A222-03/A322-03)

The electropolish shall occur after finish machining of the above components, just prior to the Kolsterizing treatment described below and the subsequent welding.

Electropolish shall be performed per ASTM B912. The finished surface appearance shall be bright. Dimensional non-conformance caused by excessive material removal in the electropolish process is not acceptable.

Passivation testing shall be performed per paragraph 5.3 of ASTM B 912. For item #1 listed above, the passivation test shall be performed on the locations shown in section 5.2.2. There are (5) total test areas; the middle of the outside of the inner window, the middle of the inside of the inner window, the front tip of the center baffle, and the middle of both sides of the center baffle.

For item #2 listed above, passivation testing shall occur in the middle of the inside of the outer window.

For items #3 and #4, passivation testing location is at the discretion of the seller.

Electropolish certificates of conformance and passivation test results shall be submitted to the company in accordance with Section 9.

5.7.2 Kolsterizing

The following mercury vessel components / subassemblies shall be Kolsterized to a minimum depth of 33 microns. (Kolsterizing is a proprietary process available only through Bodycote Thermal Processing, London Ohio that produces a hard coating on all exterior surfaces and interior surfaces connected by open passages to an exterior surface):

1. Hg vessel (A222/A322) partial weldment consisting of the Hg vessel front body (A235/A335) welded to the Hg vessel inner window (A222-02/A322-02).
2. Hg vessel outer window (A237/A337)
3. Hg vessel transition body (A234/A334)
4. Hg vessel cover plate (A222-03/A322-03)

Kolsterizing for items 1 and 2 listed above shall occur after the electropolish described in Section 5.7.1.

After the above four components / subassemblies have been Kolsterized, the Hg vessel outer window (A237/A337) shall be welded to the Hg vessel front body (A235/A335). This new subassembly consisting of the front body, the inner window, and the outer window shall be Kolsterized a second time to the same 33 micron process treatment. This second treatment will require a process fixture to be manufactured and installed in the weldment by the Seller for delivery to Bodycote. Drawings of the fixture used for this process are included in the provided drawings.

The Seller shall produce a 316L stainless steel test coupon which undergoes Kolsterizing treatment alongside the actual parts. For parts that are Kolsterized twice, the test coupons shall also be treated twice. The Seller, or its subcontractor, shall test the test coupons to verify the depth of the treatment. The test coupons shall be made available to the Company. Kolsterizing certificates of conformance and test coupon results shall be submitted to the company in accordance with section 9.

The hard coat shall be removed from both butt faces of e-beam weld joints by mechanical means before welding. The depth of removed material shall exceed .002 inch and be less than an amount that would result in the assembly being shorter than allowed by the drawings. For weld joints made by the GTAW process, the Kolsterized layer shall be removed from the butt face and the on all connecting surfaces to a length greater than the heat affected zone of the weld, to be determined by the Seller.

5.8 Dimensional Stabilization and High Temperature Treatments

Dimensional stabilizing per AMS 2759 is allowed for parts which have not been Kolsterized. Dimensional stabilization steps shall be included in the approved manufacturing plan before they are performed. Results of required surface contamination and carbide precipitation testing shall be recorded and submitted for information.

Other stress relief treatments may be used if approved by the Company. Such treatments must be documented and included in the manufacturing plan.

Kolsterized parts shall not be heated above 300°C, except for welding as allowed per Section 5.7.2 and incidental heat created by machining.

5.9 Best Practices

Over the history of target fabrication, several best practices have been developed. These methods are not required, but are presented for information only.

5.9.1 WCS Front Sleeve

Previous fabrications have been attempted using the plug weld method used for other components. The number of plug welds was found to lead to delays in fabrication due to the large number of repairs. EB welding large sections on the side such that the outside

and inside contours can then be EDM wire cut was found to be preferable. Geometry such as is shown below could be used to allow the root of the EB weld, which generally has a higher incidence of flaws, to be removed. Care is needed to ensure the final geometry meets requirements.

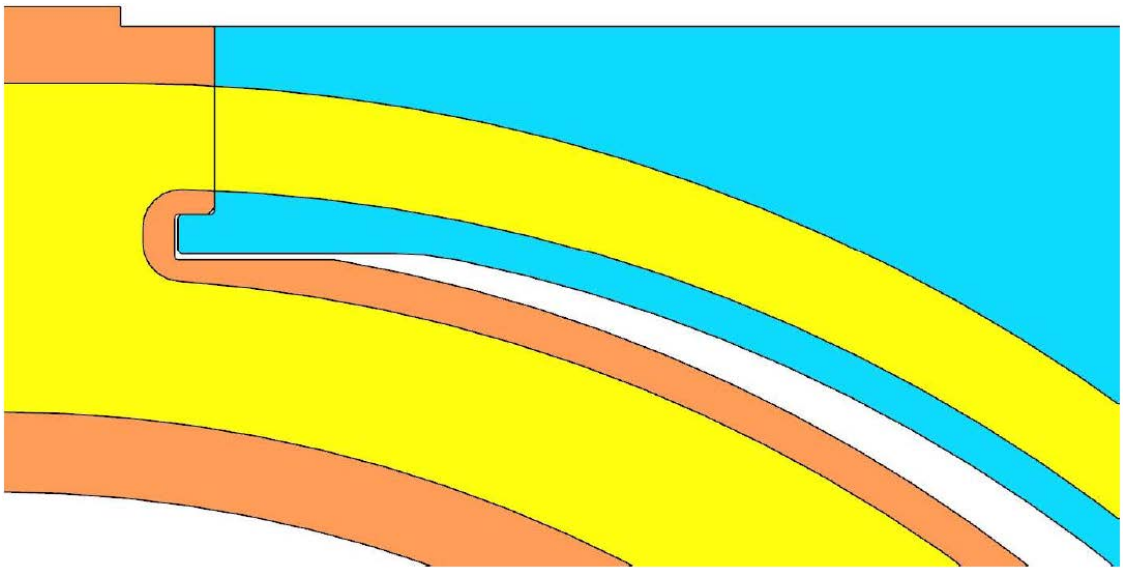

Figure 4. Possible water shroud joint geometry. (Image credit: Terry Rauch, Metalex)

5.9.2 Mercury Vessel Inner Window

Best results have been seen by welding the inner window (A222-02/A322-02) of the mercury vessel to the front body (A235/A335) with a significant amount of stock on. The combined weldment can then be dimensionally stabilized before additional machining to reduce distortion.

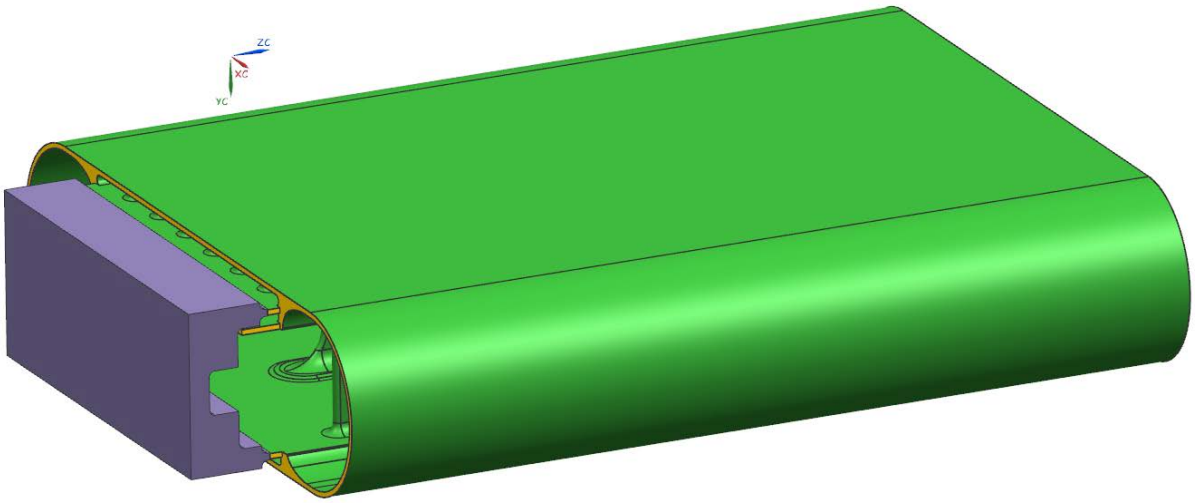

Figure 5. Mercury vessel inner window with stock welded to front body. (Image credit: Rob Schuermann, Metalex)

5.9.3 Weld Sequence

Best results have been seen welding the component of the water shroud and mercury vessel together from the front (window and guide wall) to the back (manifold block) side of the target. Leaving sufficient stock on mating surfaces to allow adjustment of each subsequent weld can aid in meeting the final dimensional requirements of the weldments.

6. EXAMINATION AND TESTING

6.1 Dimensional Inspections

6.1.1 General

The target module consists of two weldments (Hg vessel and water cooled shroud) that are bolted together. Interior dimensions of the water shroud and Hg vessel are critical for the proper flow of mercury and water through the assemblies and to ensure proper interfacing with the proton beam. The gaps between the Hg vessel and water shroud are critical to ensure that leaked fluids from either vessel flow unimpeded to the leak detectors. The exterior dimensions establish the fit between the module and the neutron reflectors in the inner plug.

The Seller is responsible for providing a target module which meets all dimensional requirements of the 2-D drawing package. As such, all dimensional features shall be verified by the seller per its quality program. It is the baseline expectation that each tolerance be measured and recorded for each unit. Any sampling plan which results in not all tolerances, and/or not all units inspected must be approved by the Company. The 2-D drawing package requires many dimensional checks to be reported directly to the Company via a dimensional inspection report; for these dimensional checks, the numbering used on the drawings shall be reflected in the dimensional inspection reports.

If for any reason alternate inspection practices, such as measuring to an alternate set of datums, are desired, the Seller shall submit for approval an alternate inspection plan documenting the alternate method and the proposed revised inspection tolerances to be verified.

6.1.2 Envelope Tolerances

In order to maintain mercury in the proper position to interface with the proton beam, clearance between the Hg vessel and the water shroud, and clearance between the water shroud and the Inner Reflector Plug, drawings A221/A321, A222/A322, and A223 include profile tolerances over all surfaces of the assemblies forward of the inflatable seal mounting flange. These boundary tolerances shall be verified by CMM in their shown configuration, or using other Company approved method. The results shall be reported to the Company.

6.1.3 Internal Window Gaps

The following three gaps cannot be measured directly, but shall be verified and reported to the Company per drawing requirements:

1. Between the inner and outer windows of the mercury vessel as shown on drawing A222/A322.
2. Between the inner and outer windows of the water shroud as shown on drawing A223.
3. Between the outer surface of the mercury vessel outer window and the inner surface of the water shroud inner window as shown on drawing A221/A321.

Multiple measurements shall be performed and evaluated in order to record each of these gaps. Careful consideration of EB weld shrinkage is required. The Seller shall develop a procedure for measuring these internal gaps. This procedure shall be submitted to the company for approval prior to assembly of the parts which renders the gaps no longer accessible.

6.1.4 Internal Hole Continuity Testing / Certification

The Seller shall notify the Company not less than (10) working days prior to hole continuity testing.

The water cooled shroud front body, transition, and rear body (A226, A227, and A228) have .125” cross drilled holes that allow cooling water to flow across the parts. The seller is required to individually verify that each hole is continuous across the part. This task can be completed by sliding small diameter rods or pellets through each hole. The seller shall submit a test report that documents completion of this examination for each hole per section 9. The test report shall document that the smallest diameter rod or pellet allowed by the part drawing tolerance will pass through every hole.

The water cooled shroud mounting flange (A233) has two sets of holes which provide access to the interstitial region between the Hg vessel and the water cooled shroud at final assembly. The passages shown in Section C-C on sheet 2 of 2 show the holes that allow backfill of the interstitial and continuity to the burst disk. The radial hole is plugged at a later assembly. The axial hole must connect with the plugged radial hole. The passages shown in section B-B on sheet 2 of 2 show the holes that allow the heated RTD leak detector to access the interstitial. The seller is required to individually verify that each of these passages is continuous as shown on the part drawings. This task can be completed by sliding small diameter rods or pellets through each hole. The seller shall submit a test report that documents completion of this examination for each hole per Section 9.

6.1.5 Inspection in Restrained Condition

Parts to be later welded may be inspected in a restrained condition which mimics the constraint of the welding fixtures to be used. The restraint to be used shall be submitted for approval prior to use.

6.2 Weld Inspection

6.2.1 Testing Procedures

The Seller shall submit weld visual examination and nondestructive examination procedures for Company approval in accordance with Specification Section 9. Weld examination procedures shall meet the requirements of the ASME Code, Section VIII, Division 2, and Section V.

Welds are subject to inspection by the Company. The Company may request additional examinations on any weld to establish the quality of the weld. The Company reserves the right to accept, reject or demand removal of welds that are interpreted to be in violation of this specification.

6.2.2 Weld Inspection Report Documentation Requirements

Required inspection (VT, PT, UT, RT) for individual welds is defined by the 2-D drawing package. For each weld, the company shall submit a compiled weld inspection report that includes all required inspections. The report shall include all of the following information:

1) The Company Subcontract Number
2) Unique report number
3) Target module serial number
4) Identification of weld by part numbers or by referencing an assembly weld map
5) Test date
6) Specific test, inspection, or examination, including procedure designation and acceptance criteria
7) Identification of measuring and test equipment used and their latest calibration dates
8) Inspection results
9) A clear sketch of the weld that identifies areas of non-conformance or incomplete inspection coverage
10) Actions taken as a result of any deviations noted during the inspection
11) Signature or initials of the person performing the inspection and his/her qualifications, and the signature or initials of the person witnessing the inspection if applicable.

6.2.3 Examination Personnel Requirements

The Seller is responsible for the performance of specified weld examinations. These examinations may be performed by qualified Seller personnel or by an outside qualified examination service. Examination personnel certifications shall be submitted to the Company in accordance with Specification Section 9.

Personnel performing nondestructive testing other than visual examination, pressure testing, and helium leak testing, shall be currently certified in accordance with SNT-TC-1A. Only individuals certified as NDT Level II or III may perform nondestructive testing to this specification.

Personnel performing visual examination of welds shall be currently certified either as an AWS QC1, Certified Welding Inspector (CWI) or as a Level II or III in visual testing in accordance with the requirements of SNT-TC-1A. If certified to SNT-TC-1A, the training and experience requirements shall be satisfied entirely by time spent in weld examination related work.

6.2.4 Visual Examination

Pre-weld Inspection

Weld areas shall be visually inspected prior to welding to ensure proper weld prep and fit up, that the markings and certifications are in accordance with specifications, that the base metals are of the specified thickness and type, that the weld purge is set up properly and the purge is analyzed for oxygen, that the welder is qualified to make the weld, and that all materials are free of contaminants. Defective base material shall not be repaired by welding without prior approval of the Company via the non-conformance process outlined in Section 8.3.

Post-weld Inspection

All finished welds shall be visually inspected and documented by weld inspection reports. The Seller shall submit weld inspection reports in accordance with Specification Section 6.2.2 and Section 9. Weld examination procedures shall meet the requirements of ASME Boiler and Pressure Vessel Code, Section V, Article 9, (Latest Edition), Visual Examination. Defects discovered by visual inspection shall be removed, repaired, and re-inspected.

The requirement for visual weld inspection applies to the face **and** root sides of all weld joints. Borescope techniques will be necessary for most weld root visual inspection. If part or joint geometry does not allow weld root visual inspection over a portion or all of a weld, this limitation shall be clearly noted on the weld inspection report.

For weld joints that require further machining that would remove the crown, consideration should be given to postponing other NDE techniques such as specified in paragraphs 6.2.5, 6.2.6, and 6.2.7 as indicated with the associated engineering drawing until after the machining. This could improve the interpretability of the NDE results. This should be weighed against the risk of rework should a defect be found in the weld joint.

6.2.5 Liquid Penetrant Examination

Where specified on the drawings the welds shall be examined by liquid penetrant in accordance with Section VIII, Division 2, Section 7.5.7, and ASTM E165. Penetrant testing is required on accessible surfaces only. All penetrant material shall be removed immediately following the testing of each weld. Weld map drawings shall be submitted in the weld report detailing all welds that have been examined and noting defects that were detected and subsequent repairs. The Penetrant Inspection Report with Weld Map Data shall be submitted in accordance with specification Section 9.

Rejectable defects discovered by visual inspection or nondestructive testing shall be removed, repaired, and re-inspected. Defective base material shall not be repaired by welding to bring it back into specification without prior approval by the Company. All weld repairs shall be processed via the non-conformance process as described in Section 8.3, except as noted in Section 5.3.5.

6.2.6 Radiographic and Radioscopic Examination

Where specified on the drawings welds shall be radiographically examined per the requirements of ASME Section VIII, Division 2, Section 7.5.3, unless otherwise specified below. Individual radiographs shall correspond to welds identified on weld map drawings supplied by the Seller.

Specific guidelines for radiographic interpretation and judgment are provided below. These guidelines shall supersede corresponding ASME Section VIII, Division 2 interpretation and acceptance criteria. However, these guidelines do not annul the remaining guidelines within ASME Section VIII, Division 2.

<u>Radiographic Interpretation:</u>

1. t is the thickness of the thinnest member joined (actual base metal) or evaluated on the radiograph.
    a. Relevant indications are those having a dimension of $\frac{1}{10}$ t. All relevant indication shall be recorded on the RT reader sheet.
    b. Non-relevant indications, those smaller than considered relevant, shall be considered in the acceptance criteria but need not be recorded unless rejected.
2. Rounded indications shall be those having a length to width ratio of less than 3:1
3. Elongated indications shall be those having a length to width ratio of greater than 3:1 and not considered linear indications.
4. Linear indications shall be those having a minor width of less than 0.010”, having a length to width ratio of greater than 5:1, or an otherwise rounded indication with sharp edges, acute angles, or other non-rounded features in its geometry.

<u>Acceptance Criteria for Full Penetration Welds and Base Metals: (note: this is based on ASME Section VIII Div. 2 criteria)</u>

1. Any indication characterized as a crack or zone of incomplete fusion or penetration shall be rejected.
2. Rounded isolated indications, whose greatest length is equal to or greater than $\frac{1}{3}$ t shall be rejected.
3. Rounded random indications, whose greatest length is equal to or greater than $\frac{1}{4}$ t shall be rejected.
4. Any group of aligned rounded indications having an aggregate length greater than t in a length of 12t, except when the distance between the successive

imperfections exceeds 6L, where L is the length of the longest indication in the group, shall be rejected.

5. Elongated indications, whose greatest length is equal to or greater than $\frac{1}{4}$ t shall be rejected.
6. All linear indications shall be rejected.

All radiographs shall be performed using double load film (only one interpretation required). During the fabrication process, one copy of the film shall be supplied to the Company in accordance with Specification Section 9. The remaining film copy shall be supplied to the Company upon request or at the conclusion of the project. The radiographic documentation shall be included in the Weld Report.

RT Maps (marked up drawings or photos are acceptable) which clearly depict the relation of RT markers to the weld geometry shall be included in the Weld Report.

Radiographic methods including the quality of film shall meet the requirements of ASME Section V Article 2.

It is understood that particular sections of Target Module welds which require RT examination cannot be fully evaluated via the RT process due to part geometry. Such weld sections shall be clearly marked on the weld inspection reports as “best effort / non-conforming radiographic method.”

Rejectable defects discovered by radiographic inspection shall be removed, repaired, and re-inspected (except as noted in Section 6.2.8). All weld repairs shall be processed via the non-conformance process as described in Section 8.3, except as noted in Section 5.3.5.

6.2.7 Ultrasonic Examination of Welds

Where specified on the engineering drawings, welds shall be ultrasonically examined per the requirements of ASME Section VIII, Division 2, Section 7.5.4. Individual inspection reports shall correspond to welds identified on weld map drawings supplied by the Seller.

It is understood that particular sections of the Target Module welds which require UT examination cannot be fully evaluated via the UT process due to part geometry. Such weld sections shall be clearly marked on the weld inspection reports as “best effort / non-conforming ultrasonic method.”

Rejectable defects discovered by ultrasonic inspection shall be removed, repaired, and re-inspected. All weld repairs shall be processed via the non-conformance process as described in Section 8.3.

6.2.8 Examination of Double Wall Electron Beam Welds

The target module fabrication includes double wall electron beam welds. In these welds, an electron beam weld is performed which simultaneously welds both an inner and outer

wall. Inspection of these welds presents difficulties due to geometry and the surface conditions of the in-accessible faces of the weld.

These welds shall be examined as specified on the appropriate drawings. Radiographic examination may reveal indications which would lead to rejection under Section 6.2.6. Such indications should be compared to the actual surface of the weld(s), using methods such as remote VT as needed. Variations in the surface of each weld shall not lead to a reduction in thickness more than 10% of the nominal thickness of the material, except where greater values are allowed on the drawing. Except as noted on the drawings, this is not intended to require quantitative measurement of the reduction in thickness from surface variations. However, where question exists regarding the acceptability of thickness reductions, depth shall be verified by actual measurements. Radiographic indications determined to be caused by acceptable surface conditions of the weld(s) are not cause for rejection, but shall be noted on the inspection report.

6.3 Radiograph of Finished Machine Detail Parts

The pressure retaining boundaries of the following parts shall be radiographed after rough (<0.03” stock) or finish machining, prior to welding or Kolsterizing. EB weld preps may be left on the part for radiograph.

1. A222-02/A322-02 – Hg Vessel Inner Window*
2. A235/A335 – Hg Vessel Front Body
3. A237/A337 – Hg Vessel Outer Window
4. A228 – Water Shroud Front Sleeve
5. A229 – Water Shroud Inner Guide Wall
6. A230 – Water Shroud Outer Guide Wall

It is understood that not all pressure retaining boundaries will be covered by the radiograph. A best effort approach is accepted for this evaluation. Acceptance and reporting is based on the criteria given in Section 6.2.6. Radiographs and test reports shall be submitted to the Company per Section 9.

* Finish and rough machining of A222-02/A322-02 occurs after welding. Therefore, this radiograph shall be taken after welding to A235/A335.

6.4 Cleanliness Inspections

6.4.1 Internal Cleanliness

All interior surfaces shall be cleaned prior to performing welds that will make the areas inaccessible. Inspection shall confirm that all interior surfaces are free of foreign material such as oil, grease, grit, water, slag, scale, films and metal particles. All surfaces shall be wiped with clean lint-free white cloths moistened with acetone. Discoloration of the wiping cloth or a change in the appearance of the wiped surface shall be cause for rejection or additional cleaning. Inspection of all interior vessel surfaces may be performed by or witnessed by a Company representative. Documentation shall be submitted in accordance with Specification Section 9.

6.4.2 External Cleanliness

Prior to shipment and as required during fabrication the Seller shall visually inspect the target module for material defects and contamination. Inspection shall confirm that all surfaces are free of foreign material such as oil, grease, grit, water, slag, scale, films and metal particles. All external surfaces shall be wiped with clean lint-free white cloths moistened with acetone. Discoloration of the wiping cloth or a change in the appearance of the wiped surface shall be cause for rejection or additional cleaning. Components which do not meet these requirements shall be rejected until additional cleaning is performed and the component meets these criteria for cleanliness. The Seller shall submit documentation certifying the module is free of material defects and contamination in accordance with Specification Section 9.

6.5 Pressure Testing

6.5.1 General

The Seller shall be responsible for providing the test fixtures, iron gasket, and all other items necessary for and used in the testing.

The temperature of the testing facility during the duration of the pressure tests shall be held constant such that it will not affect the pressure reading.

To maintain cleanliness of the orifices, the Hg vessel internal passages shall not be evacuated, filled, or vented in such a way that gas would flow from the Hg internal passages into the bubbler assembly.

The test shall be conducted per a written procedure prepared by the Seller and approved by the Company prior to testing. This procedure shall include a description of the method used to seal the module for testing.

The Seller shall notify the Company not less than (10) working days prior to the pressure testing. The test shall be witnessed by a representative of the Company.

6.5.2 Testing of Knife Edge Seals

The knife edge seals on the mercury vessel manifold block, as shown on drawing A236/A336, shall be tested prior to assembling this block into the mercury vessel subassembly (Drawing A222/A322). Part A015-1 on Drawing A222/A322 shall be installed on the block and used for introducing the test pressure. The block and a soft iron gasket shall be placed in a fixture similar to that shown in sketch SNS-SK-01080404 (Attached as Appendix 1). The gasket used in this test shall be identical to the gasket shown in Drawing A039 with the exception that it shall not have any through-holes, i.e. shall be without the (3) 0.125 and (3) .060 diameter holes. The eight tie-down bolts shall be torqued to 750 ft lbs using a crisscross pattern in 4 approximately equal steps. The mating surface of the block should be inspected to see if it is “metal-to-metal” to the stainless steel surface on the test fixture. If not the torque can be increased in increments of 50 ft lbs. to a maximum value of 950 ft-lbs. Once metal to metal contact is achieved

the interstitial area between the knife edges shall be pressurized to 90 to 95 psig with nitrogen. The source of nitrogen shall then be isolated and the test specimen kept at pressure for 12 hours. Pressure readings shall be recorded at the start of the test and once every 15 minutes until the end of the test duration. The knife edges shall be considered acceptable if a maximum pressure loss of 0.1 psi is measured at the end of the 12 hours. The final torque required on each bolt to achieve the required leak rate shall be recorded. The torque shall be applied with a properly calibrated torque wrench and calibration records shall be included in the report.

Following the knife edge seal test, the knife edges shall be visually inspected for any obvious changes in form or surface finish. Any changes shall be reported to the Company. In addition, the .027" dimension on sheet 2 of A236/A336, zone A4 shall be re-measured. Measurements shall be taken in at least 8 equally spaced places. The results shall be reported to the company at the time of measurement, and included in the dimensional inspection submittal per Specification Section 9.3.1.

6.5.3 Pressure Measuring Instruments

Pressure testing shall utilize a test quality 6" diameter pressure gauge or calibrated electronic pressure transmitter with +/- 0.25% or better full scale accuracy. Testing devices shall be properly calibrated and shall have a range approximately double the maximum intended test pressure, but not less than 1.5 times or more than 4 times the test pressure.

6.5.4 Pneumatic Pressure Tests

Dry nitrogen shall be used for all pneumatic pressure testing. All pneumatic testing shall be performed per ASME BPVC Sect. VIII Div. 2, Section 8.3, except that specific test pressures are listed below. No visual inspection of the vessels at the test pressures is required due to subsequent helium leak testing.

1. Shroud (A223) water passages – 88 psig
This test can be performed prior to installation of the 1.5" HILTAP connectors and associated tubing.
2. Shroud (A223) internal cavity – 60 psig
This test must be performed prior to assembly onto the Hg vessel. A rubber O-ring may be used to seal against a Seller supplied test plate.
3. Hg vessel (A222/A322) internal passages – 60 psig
This test must be performed prior to installation of the water shroud. A rubber O-ring or a soft iron gasket may be used to seal against a Seller supplied test plate.
4. Bubbler assembly (A281) internal passages – 150 psig
This test must be performed prior to assembly into the Hg vessel. The bubbler has intentional leaks, which means that make-up gas will need to be continually supplied during the test.

6.5.5 The Seller shall submit test report documentation to the Company in accordance with Specification Section 9.

6.6 Helium Leak Testing

6.6.1 General

The Seller shall be responsible for devising and installing a temporary method(s) of sealing the boundaries to be tested sufficient to contain the applied test pressures. The chosen methods shall preclude the possibility of damage to the sealing surfaces on the module. The sealing methods shall be included in the test procedures.

The Seller shall be responsible for providing the test fixtures, iron gasket, and all other items necessary for and used in the testing, except as described below for leak testing the inflatable seal vacuum tube.

The test shall be conducted per a written procedure prepared by the Seller and approved by the Company prior to testing. This procedure shall include a description of the method used to seal the module or assembly for testing.

The Seller shall notify the Company not less than (10) working days prior to the leak testing. The test shall be witnessed by a representative of the Company.

6.6.2 Leak Testing of Gas Injection Assembly

The bubbler assembly (A281) shall be leak tested after pneumatic testing but before installation in the mercury vessel. The bubbler assembly is designed to allow gas flow. The intention of this testing is to verify that the assembly is leak tight outside of the intended orifices.

This testing will require hardware to provide a seal on the front and back surfaces of the bubbler weldment (A282). The O-ring or other pressure seal should be located inward of the weld locations if at all possible to allow leak testing of these welds. As stated below the hardware should have a port or valve to allow purging of the assembly.

The assembly shall be pressurized with helium to 100 psig. The assembly shall be purged of air by flowing helium through the assembly and out for a suitable time to be documented in the leak testing procedure.

Sniff the external boundary for He leaks (after allowing the background to drop as needed) using ASTM E499 test method A. A “no-leak” indication with a 1×10^{-6} torr·liter/second sensitivity shall constitute a successful test.

6.6.3 Helium Filling

The regions being filled with helium for leak testing shall be evacuated to less than 2 torr and backfilled with helium tracer gas to a pressure specified in Section 6.6.4.

To maintain cleanliness of the orifices, the Hg vessel internal passages shall not be evacuated, filled, or vented in such a way that gas would flow from the Hg internal passages into the bubbler assembly.

6.6.4 Helium Leak Tests – performed at final assembly stage (A221/A321)

1. Shroud water passages:
* Pressurize water passages with helium to 45 psia. Water passages shall be sealed using actual mating HILTAP connectors.
* Evacuate interstitial and check for He leaks across inner boundary using ASTM E493 test method B. A “no-leak” indication with 1 x 10^{-8} torr·liter/second sensitivity shall constitute a successful test.
* Sniff external boundary for He leaks using ASTM E499 test method A. A “no-leak” indication with 1 x 10^{-6} torr·liter/second sensitivity shall constitute a successful test.

2. Target Module Interstitial:
* This test shall be performed at final assembly (A221/A321) with the burst disk target leak detector assembly (A250) installed. The burst disk itself shall not be installed during this test. Both valves on the assembly (A250) should be open during the test.
* Pressurize target module interstitial with helium to 60 psia using the capped Swagelok fitting.
* Sniff external boundary for He leaks using ASTM E499 test method A. A “no-leak” indication with 1 x 10^{-6} torr·liter/second sensitivity shall constitute a successful test.

3. Hg vessel internal passages:
* Pressurize mercury passages with helium to 45 psia. The Hg vessel shall be sealed with actual HILTAP fittings on the vent weld-o-lets. The four main Hg passages shall be sealed using the same fixture used for the knife edge seal test (rubber or iron gasket is acceptable for this test). If an iron gasket is used, the .027” dimension on sheet 2 of A236/A336, zone A4 shall be re-measured. Measurements shall be taken in at least 8 equally spaced places. The results shall be reported to the company at the time of measurement, and included in the dimensional inspection submittal per Specification Section 9.3.1.
* Evacuate interstitial and check for He leaks across Hg vessel boundary forward of the shroud mounting flange using ASTM E493 test method B. A “no-leak” indication with 1 x 10^{-8} torr·liter/second sensitivity shall constitute a successful test.
* Sniff all welded joints/nozzles rear of the water shroud mounting flange for He leaks using ASTM E499 test method A procedure. A “no-leak” indication with 1 x 10^{-6} torr·liter/second sensitivity shall constitute a successful test.

4. Inflatable Seal Helium Supply Tube
*Evacuate Helium Supply Tubing and perform helium leak test per ASTM E498 test method A. All joints in this volume shall be leak checked, including the bellow assembly. A “no-leak” indication with 1 x 10^{-8} torr·liter/second sensitivity shall constitute a successful test.

5. Inflatable Seal Vacuum Tube:
* A seal plate with a rubber gasket clamped to the inflatable seal front surface will be required to complete this test. This plate will be supplied by the Company.
* Evacuate Vacuum Tubing and perform helium leak test per ASTM E498 test method A. A "no-leak" indication with 1 x 10^{-8} torr·liter/second sensitivity shall constitute a successful test.

6.6.5 The Seller shall submit test report documentation to the Company in accordance with Specification Section 9

6.7 Test of Installed Instruments

The Seller is required to perform the following tests to demonstrate proper installation of the Company supplied instruments after the instruments are permanently mounted, the leads connected to the connectors, and the connectors fixed to the module as shown on Drawings A222/A322, A247, and A064.

6.7.1 Tests of the MI Cables

Electrical conductivity test shall be conducted using the exposed terminals on the connector. (Refer to Drawing A064 for wiring diagram). The Company will supply specific testing requirements with the instrument.

6.7.2 Test of Thermocouple Probe

The probe shall be shown to be functional using an electrical test device supplied by the Company.

The results of all tests shall be documented and submitted to the Company. The Seller shall be responsible for identifying the cause of failure of any of the tests and be responsible for subsequent repair.

6.8 Weight and Center of Gravity Determination

The weight and center of gravity of each module shall be determined by lifting the completed target module assembly, as shown on Drawing A221/A321 at the trunnions (A031) using a fixture that allows the module to rotate about the trunnions. The amount of force required to lift the module, corresponding to the weight of the module, shall be measured to an accuracy of plus/minus 10 lbs with a calibrated scale. It is expected that the module will rotate to a nose down position during this test. The center of gravity shall be determined by measuring the amount of force that needs to be applied at the centerline of the slots on the pivot cradles in order for the module to become level. The weight of the module and the amount of force needed to balance the module shall be submitted per Specification Section 9.3.11.

7. STORAGE, PACKAGING AND SHIPPING

The Seller shall be responsible for shipment of the Target Module, mercury vessel, or water shroud to the SNS site in Oak Ridge Tennessee or to an alternate site specified by SNS in the contiguous United States. No shipments will be allowed until all required demonstrations, examinations, and tests have been satisfactorily completed, the design of the shipping container and the shipping plan have been approved by the Company, and all documents required in Specification Section 9 have been approved by the Company. The Seller shall notify the Company of a shipping date not less than ten (10) working days prior to shipment.

Prior to shipment the interstitial space between the mercury vessel and water shroud shall be evacuated and back filled with dry nitrogen gas at atmospheric pressure using the access tube on the mounting flange. The space shall then be sealed by closing both valves and installing the Swagelok cap on the end of the tube.

The Target Module, mercury vessel, or water shroud shall be clean and dry at the time of shipment. It shall be shipped in a container chosen by the Seller sufficient to prevent contamination or physical damage to any part of the module during handling, transit to the delivery site, and unloading and handling at the delivery site. The exterior of the target module or component container shall be wrapped in a waterproof plastic film. The container shall be fixed to a pallet suitable for handling by a forklift. The container shall become the property of the Company and used for storage of the target modules or components. The containers may be returned to the Seller by prior agreement once the target modules or components are removed.

The Seller shall be responsible for the cleanup of any rust or other contaminants that are visually detectable upon arrival and inspection at the SNS site. The Company reserves the right to reject the Target Module or component if the Seller deviates from the approved shipping plan.

The ring seal (A039) shall be shipped in individual sealed dry plastic containers containing a moisture absorbent material and shall not be installed in the module.

The shipping container shall be plainly labeled with the following:

- The words “SNS Target Module”, “SNS Target Mercury Vessel”, or “SNS Target Shroud” as appropriate.
- The target module or component’s serial number
- Gross package weight
- Target module weight and balancing load per Section 6.8 for target modules
- Seller identification
- The Company’s subcontract number
- The Company’s shipping address

8. QUALITY ASSURANCE & QUALITY CONTROL

8.1 Quality Assurance Program

All work will be conducted by the Seller under a Company approved Quality Assurance Program. The program shall be in sufficient detail and scope that the Company can evaluate the adequacy of quality controls to be expected from the Seller. The QA program shall conform to the requirements of DOE Order 414.1D and contain the following elements; training and qualification, improvement program, documents and records program, process control (including a mature calibration program), design control, procurement control, inspection and testing program.

8.2 Seller Requested Deviations or Changes

The Seller may propose deviations from the specifications, drawings, or other technical requirements of this procurement. The Seller shall communicate the proposed deviations or changes directly to the Company's Technical Project Officer (TPO). The TPO will evaluate the technical aspects and recommend to the buyer, who will communicate acceptance or disapproval to the Seller. The request shall identify the affected items, drawing/specification number and revision number, cost (increase or reduction), a description of the proposed deviation, and the justification for it. No proposed changes shall be incorporated prior to receipt of Company approval.

8.3 Non-Conformances

All non-conformances that occur during machining and fabrication of the Target Module shall be reported to the Company via the Seller's non-conformance process. Non-conformances shall be reported regardless of whether the affected part will be scrapped, used-as-is, or repaired. In all cases, the Company shall approve the non-conformance report (NCR) prior to continued processing by the Seller.

NCR's shall identify the affected items(s) by name and serial number, citing the drawing/ specification number and revision number containing the specific requirement that has not been met. NCR's shall state the number of nonconforming items being reported. The request shall include a description of the nonconformity, identifying requirement(s) not met. The supplier shall attach a description of the cause, and a corrective action plan and schedule if pertinent.

Note: The issuance and acceptance of such a request in no way limits or affects the warranty provision of the Agreement. Such a request shall not establish a precedent or obligation to accept existing or future items not conforming to all provisions of the Agreement.

8.4 Surveillance

As part of the Company's quality assurance program, source surveillance activities will be conducted at the Seller's facility or any sub-tier seller facility that the Company determines necessary to ensure that quality objectives are met.

Such surveillance may include auditing and monitoring of production processes, in-process inspection and controls, chemical or physical certifications, final inspection and tests, preparation for shipment, and review of certification data. The Seller shall provide the Company representatives access to all data and operating areas pertinent to the contract. Source surveillance by the Company representative shall not constitute product acceptance by the Company and shall in no way relieve the Seller of the responsibility to furnish acceptable items.

8.5 Electronic Documents

Wherever feasible, all documentation shall be submitted in an electronic format acceptable to the SNS Document Control Center, in addition to any other formats. Adobe Portable Document Format (PDF) has been listed as an acceptable format for all documents, including drawings that would normally be printed on paper. If the electronic document is not contained in one complete electronic file, instructions for reassembling the document must be provided. Seller shall use their drawing number format but also obtain drawing numbers for design drawings from Company representative.

9. SUBMITTALS

9.1 Appraisal Documentation - Submitted with Proposal

9.1.1 Project Plan

The Seller shall submit a Project Plan that shall include, but not be limited to, the following items:

- A milestone schedule, showing, as a minimum, the time required for material procurement, fabrication, testing, and shipping of the target module or component, and the sequence in which these activities will be conducted. The plan should be in sufficient detail to assure the Company that the Seller has given due consideration to the time required to conduct all activities required to meet the contract delivery date.
- Identification of the tests, inspections, and examinations to be performed.
- Identification of the location where the performance tests will be conducted and methods employed by the Seller in conducting the tests
- Identification of required submittals, including hold points for items requiring Company approval and the time allocated for obtaining these approvals.
- Identification of all subcontractors to be used, the work to be performed, and information to allow the Company to evaluate the qualification of the subcontractor to perform the identified work

9.1.2 Manufacturing Plan

The Seller shall submit a Manufacturing Plan that shall include, but not limited to, the following:

- A description of the facility to be used for the manufacture of the Target Module or component
- A description of the manufacturing methods including the principle tools to be used.
- A description of the planned general inspections and methods for conducting them.

9.1.3 Sellers Welding Program

9.1.4 Sellers Quality Assurance Program Plan.

9.1.5 A listing of all exceptions to the requirements on the Company supplied drawings and this Specification.

9.2 Documentation for Approval – Submitted Prior to the Start of Fabrication

The following documentation shall be submitted to the Company's Technical Project Officer (TPO) as defined by the purchase order. The TPO will obtain appropriate internal Company reviews and return the submittals to the Seller. For scheduling purposes, the Seller can assume that this will be done within 5 working days. The Company will provide one of the following dispositions: (A) Approved, (B) Approved as noted – resubmittal not required, (C) Approved as noted – resubmit, or (D) Not Approved – resubmit.

9.2.1 Bill of Material Matrix / Spreadsheet:

The Seller shall maintain a bill of materials in a matrix / spreadsheet format that provides a uniform cross reference for all material related requirements. At a minimum, the spreadsheet shall list CMTR numbers, CEM test reports, HIP results and UT test reports as applicable for each detail part. The seller may expand the spreadsheet to include dimensional inspection, pressure/leak test, weld filler metal, deviation/NCR, and weld inspection report references.

9.2.2 Up to Date Project Schedule;

The Seller shall create and maintain a project schedule that outlines the functional steps required to complete the project. The schedule shall be updated continuously. Any project status change that will result in more than a 2-week difference in part delivery shall be reported to the Company immediately. The Company will use this schedule to plan source surveillance as described in Section 8.4.

9.2.3 Certified Mill Test Reports (CMTR's), Seller's Certification of Solution Anneal, and Corrosion Test Reports and Micrographs;

Stock material shall not be machined until respective submittals have been approved by the Company.

9.2.4 ASME BPVC Code Section qualified job specific Weld Procedures and Welding Procedure Quality Records;

Welding shall not occur until submittals have been approved by the Company.

9.2.5 Welder Certifications and Identification;

Welding shall not occur until submittals have been approved by the Company.

9.2.6 Visual Weld Examination and Nondestructive Testing Procedures;

Weld inspection shall not occur until submittals have been approved by the company.

9.2.7 Cleaning Procedure;

Machining and welding shall not occur until the cleaning procedure has been approved by the Company.

Final assembly or welding of the gas supply system shall not occur until the gas supply cleaning and handling procedure has been approved.

9.2.8 Examination Personnel Certifications;

Respective examinations / tests shall not occur until certifications are approved by the Company.

9.2.9 HIPing plan;

HIPing shall not occur until the HIPing plan has been approved by the Company. The HIPing plan shall document the location and size of the samples to be provided.

9.2.10 Pressure and/or leak test procedures;

Pressure and leak testing shall not occur until the procedures have been approved by the Company.

9.2.11 Ultrasonic test reports for the forgings;

Machining of stock forged material shall not occur until UT reports have been approved by the Company.

9.2.12 Plug Welding Plan;

Plug welding of the water shroud cross holes shall not occur until the plan is approved by the Company.

9.2.13 Internal Gap Measurement Procedure;

Welding of Hg vessel and water shroud outer windows shall not occur until the internal gap measurement procedure has been approved by the Company.

9.2.14 Weld Filler Metal CMTR’s and test reports;

No welding shall occur until weld metal CMTR’s and mechanical test reports have been approved by the Company.

9.2.15 Stock material plan for components;

Machining of the associated surfaces shall not commence until any stock material plan required by Section 5.1 is approved.

9.2.16 Dimensional Inspection Sampling Plan

If dimensional inspection is less than 100%, a sampling plan shall be submitted for approval in accordance with Section 6.1.

9.2.17 Alternate Inspection Plan

If it is desired to inspect parts in a manner not consistent with the drawing requirements, such as through the use of alternate datum, an alternate inspection plan shall be submitted for approval in accordance with Section 6.1.

9.3 Certification Documents – submitted in process and prior to shipment.

The following documentation shall be submitted to the Company's Technical Project Officer (TPO) as defined by the purchase order. The TPO will obtain appropriate internal Company reviews and return the submittals to the Seller. For scheduling purposes, the Seller may assume that items will be returned within 5 working days. The Company will provide one of the following dispositions: (A) Approved, (B) Approved as noted – resubmittal not required, (C) Approved as noted – resubmit, or (D) Not Approved – resubmit. As noted below, several "in-process" submittals are required. Complete approval of all submittals is required prior to shipment.

9.3.1 Dimensional inspection test reports;

Dimensional inspection reports shall be submitted at the detail part and subassembly level during the project. A detail part shall not be welded into its next assembly until its dimensional inspection report has been approved by the Company. Likewise, a subassembly component shall not be welded or assembled into its next assembly until its dimensional inspection report has been approved by the Company.

9.3.2 Non-conformance Reports and Deviation Requests;

No further processing of affected parts or assemblies shall occur until non-conformances and/or deviation requests are approved by the Company.

9.3.3 Internal Hole Continuity Certification Reports

Reports shall be submitted per Section 6.1.4 after affected parts have been finish machined.

9.3.4 Radiographs of Finished Machined Parts;

Radiographs and reports shall be submitted prior to further welding or Kolsterizing of affected parts.

9.3.5 Electropolish Certificates of Conformance and Passivation Test Results;

The Company shall approve electropolish C of C and passivation test reports before further processing / welding occurs to affected parts.

9.3.6 Kolsterizing Certificates of Conformance and Test Coupon Results;

The Company shall approve Kolsterizing C of C and test reports before further processing / welding occurs to affected parts.

9.3.7 Weld Inspection Reports;

All required weld inspection reports (VT, PT, RT, UT) shall be submitted after each weld. No processing shall occur that renders a weld inaccessible for repair until the reports have been approved by the Company.

All weld inspection reports shall include clearly defined weld maps.

9.3.8 Physical Radiographs;

Two sets of radiographs (double load film) are required.

The Seller shall submit radiograph film in process after a given weld for approval. No processing shall occur that renders a weld inaccessible for repair until the radiographs have been approved by the Company.

9.3.9 Leak and Pressure Test Reports;

Leak and pressure test reports shall be approved by the Company prior to assembly of affected subassemblies into their next assembly.

9.3.10 Stock material;

The report of stock material, if required by 5.1, shall be approved by the Company prior to shipment.

9.3.11 Target weight and required balancing force;

The target weight and balance report shall be approved by the Company prior to shipment.

9.3.12 Seller certification that all surfaces have been cleaned and tested to requirements of this specification;

The cleanliness report shall be approved by the Company prior to shipment.

9.3.13 Shipping plan

The shipping plan shall be approved by the Company prior to shipment.

10. ACCEPTANCE

Final acceptance of the Target Module or component shall be upon delivery at the Company's designated site and shall be contingent on the following conditions:

10.1.1 Receipt and approval of all data and documents per the requirements of Section 9.3 of this specification.

10.1.2 Receipt of a Certificate of Compliance, signed by a representative of the Seller, verifying that the Target Module or component meets all of the requirements of this specification and conforms to the Company approved drawings.

10.1.3 On-site acceptance testing, including repetition of helium leak tests.

11. DRAWING LIST

Jet Flow Target Module

Drawing Number	Rev.	Description	Comment
106010101-m8u-8700-a221	6	Target Module Assembly	
106010101-m8e-8700-a039	5	Ring Seal	
106010101-m8e-8700-a060	3	He Connector, Front Asm	
106010101-m8e-8700-a061	3	Vac Connector, Front Asm	
106010101-m8u-8700-a250	0	Burst Disk Leak Detector	
106010101-m8u-8700-a203	2	Valve Assembly	
106010101-m8u-8700-a209	1	Manifold Weldment	
106010101-m8u-8700-a213	0	Valve Clamp	
106010101-m8u-8700-a214	0	.038 OD Tube Clamp	
106010101-m8u-8700-a215	0	.038 OD Tube Clamp Base	
106010101-m8u-8700-a216	0	.50 Tube Clamp	
106010101-m8u-8700-a217	3	Valve Bracket Weldment	
106010101-m8u-8700-a204	1	Burst Disk Cover Weldment	
106010101-m8u-8700-a206	0	Tube	
106010101-m8u-8700-a207	1	Wire Harness	
106010101-m8u-8700-a259	0	Detector Assembly	Supplied By Company
106010101-m8u-8700-a242	1	Hex Hd Jack Bolt	
106010101-m8u-8700-a243	2	Bolt on Shroud Seal	
106010101-m8u-8700-a244	0	Washer	
106010101-m8u-8700-a245	1	Custom Length SHCS, ½-13 x 1.62	
106010101-m8u-8700-a246	2	Custom Length HHCS, ½-13 x 2.15	
106010101-m8u-8700-a269	0	Spacer	
106010101-m8u-8700-a270	0	Seal Tube Adapter	
106010101-m8u-8700-a222	9	Mercury Vessel Assembly	
106010101-m8e-8700-a015	1	½ Tube Weld-O-Let Asm	
106010101-m8e-8700-a058	3	Cond. Probe Guard	
106010101-m8u-8700-a247	2	Leak Detector Instr Asm	Supplied By Company
106010101-m8u-8700-a248	0	MI Cable 1 Asm	Supplied By Company
106010101-m8u-8700-a249	0	MI Cable 2 Asm	Supplied By Company
106010101-m8u-8700-a267	1	Conductivity Probe	Supplied By Company
106010101-m8u-8700-a251	0	Leak Detector Connection Enclosure	Supplied By Company
106010101-m8u-8700-a252	0	Connection Enclosure	Supplied By Company
106010101-m8u-8700-a253	0	Enclosure Cover	Supplied By Company
106010101-m8u-8700-a254	0	Terminal Block Assembly	Supplied By Company
106010101-m8u-8700-a256	0	Terminal Block	Supplied By Company
106010101-m8u-8700-a257	0	Terminal	Supplied By Company

Drawing Number	Rev.	Description	Comment
106010101-m8u-8700-a258	0	Keyed Washer	Supplied By Company
106010101-m8e-8700-a255	0	EGS, Pin Side, Connector Assembly	Supplied By Company
106010202-m8u-8700-a526	0	Macor ¾" EGS Socket Side Insert	Supplied By Company
106010101-m8u-8700-a232	3	Mercury Vessel Manf Blk Subassembly	
106010101-m8e-8700-a027	1	Pivot Cradle	
106010101-m8e-8700-a030	2	Grapple Pin	
106010101-m8e-8700-a031	1	Trunnion Post	
106010101-m8u-8700-a236	5	Mercury Vessel Manf Blk (part)	
106010101-m8u-8700-a240	0	Orifice Plate	
106010101-m8u-8700-a233	6	Water Cooled Shroud Mtg Flange	
106010101-m8u-8700-a234	3	Transition Body	
106010101-m8u-8700-a235	6	Front Body	
106010101-m8u-8700-a237	4	Outer Window	
106010101-m8u-8700-a241	0	Course Alignment Guide	
106010101-m8u-8700-a281	0	Bubbler and Tube Weldment	
106010101-m8u-8700-a282	2	Bubbler Weldment	
106010101-m8u-8700-a283	0	Gas Passthrough	
106010101-m8u-8700-a284	0	Gas Supply Tubing	
106010101-m8u-8700-a287	0	Screen Holder	
106010101-m8u-8700-a288	0	Check Valve to Hiltap Tube	
106010101-m8u-8700-a289	0	Clamp Base, Tall	
106010101-m8u-8700-a290	0	Clamp Top	
106010101-m8u-8700-a291	0	Left Bent Tube	
106010101-m8u-8700-a292	0	Right Straight Tube	
106010101-m8u-8700-a293	0	Right Bent Tube	
106010101-m8u-8700-a294	0	Tee to Check Valve Tube	
106010101-m8u-8700-a295	0	Clamp Base, Short	
106010101-m8u-8700-a296	0	Screen Stop	
106010101-m8u-8700-a297	0	Hiltap Mounting and Screen Housing	
106010101-m8u-8700-a223	8	Water Cooled Shroud Weldment	
106010101-m8u-8700-a224	2	Inflatable Seal Assembly	Supplied By Company
106010101-m8u-8700-a231	0	Inflatable Seal Guide Plate	Supplied By Company
106010101-m8u-8700-a225	4	WCS Inflatable Seal Mtg Flg	
106010101-m8u-8700-a226	4	Water Cooled Shroud Rear Sleeve	
106010101-m8u-8700-a227	4	WCS Transition Piece	
106010101-m8u-8700-a228	4	WCS Front Sleeve	
106010101-m8u-8700-a229	3	WCS Inner Guide Wall	
106010101-m8u-8700-a230	2	WCS Outer Guide Wall	

Drawing Number	Rev.	Description	Comment
Reference Drawings:			
106010101-m8e-8700-a064	4	Bendix Connector Wiring Diagram	
106010101-m8e-8700-a076	1	Plating Fixture Assembly	
106010101-m8e-8700-a077	1	Plating Fixture Weldment	
106010101-m8e-8700-a078	1	Plating Fixture Plate	
106010101-m8e-8700-a079	1	Plating Fixture Angle Bracket	
106010101-m8e-8700-a080	0	Plating Fixture Tube - .375 OD X .035 Wall	
106010101-m8e-8700-a081	2	Plating Fixture Spider	
106010101-m8e-8700-a082	0	Plating Fixture Tube - .188 OD X .006 Wall	
106010101-m8e-8700-a083	1	Plating Fixture Tube Clamp	
106010101-m8e-8700-a084	1	Plating Fixture Spacer Plate	
106010101-m8e-8700-a085	0	Plating Fixture Tube Guide	
106010101-m8u-8700-a410	0	Plating Fixture Angle Bracket	

Updated Original Target Module

Drawing Number	Rev.	Description	Comment
106010101-m8u-8700-a321	6	Target Module Assembly	
106010101-m8e-8700-a039	5	Ring Seal	
106010101-m8e-8700-a060	3	He Connector, Front Asm	
106010101-m8e-8700-a061	3	Vac Connector, Front Asm	
106010101-m8u-8700-a250	0	Burst Disk Leak Detector	
106010101-m8u-8700-a203	2	Valve Assembly	
106010101-m8u-8700-a209	1	Manifold Weldment	
106010101-m8u-8700-a213	0	Valve Clamp	
106010101-m8u-8700-a214	0	.038 OD Tube Clamp	
106010101-m8u-8700-a215	0	.038 OD Tube Clamp Base	
106010101-m8u-8700-a216	0	.50 Tube Clamp	
106010101-m8u-8700-a217	3	Valve Bracket Weldment	
106010101-m8u-8700-a204	1	Burst Disk Cover Weldment	
106010101-m8u-8700-a206	0	Tube	
106010101-m8u-8700-a207	1	Wire Harness	
106010101-m8u-8700-a259	0	Detector Assembly	Supplied By Company
106010101-m8u-8700-a242	1	Hex Hd Jack Bolt	
106010101-m8u-8700-a243	2	Bolt on Shroud Seal	
106010101-m8u-8700-a344	0	Washer	
106010101-m8u-8700-a345	0	Custom Length SHCS, ½-13 x 1.62	

Drawing Number	Rev.	Description	Comment
106010101-m8u-8700-a346	1	Custom Length HHCS, ½-13 x 2.15	
106010101-m8u-8700-a269	0	Spacer	
106010101-m8u-8700-a270	0	Seal Tube Adapter	
106010101-m8u-8700-a347	0	Retained Bolt Washer	
106010101-m8u-8700-a322	6	Mercury Vessel Assembly	
106010101-m8e-8700-a015	1	1/2 Tube Weld-O-Let Asm	
106010101-m8e-8700-a058	3	Cond. Probe Guard	
106010101-m8u-8700-a247	2	Leak Detector Instr Asm	Supplied By Company
106010101-m8u-8700-a248	0	MI Cable 1 Asm	Supplied By Company
106010101-m8u-8700-a249	0	MI Cable 2 Asm	Supplied By Company
106010101-m8u-8700-a267	1	Conductivity Probe	Supplied By Company
106010101-m8u-8700-a251	0	Leak Detector Connection Enclosure	Supplied By Company
106010101-m8u-8700-a252	0	Connection Enclosure	Supplied By Company
106010101-m8u-8700-a253	0	Enclosure Cover	Supplied By Company
106010101-m8u-8700-a254	0	Terminal Block Assembly	Supplied By Company
106010101-m8u-8700-a256	0	Terminal Block	Supplied By Company
106010101-m8u-8700-a257	0	Terminal	Supplied By Company
106010101-m8u-8700-a258	0	Keyed Washer	Supplied By Company
106010101-m8e-8700-a255	0	EGS, Pin Side, Connector Assembly	Supplied By Company
106010202-m8u-8700-a526	0	Macor ¾” EGS Socket Side Insert	Supplied By Company
106010101-m8u-8700-a332	0	Mercury Vessel Manf Blk Subassembly	
106010101-m8e-8700-a027	1	Pivot Cradle	
106010101-m8e-8700-a030	2	Grapple Pin	
106010101-m8e-8700-a031	1	Trunnion Post	
106010101-m8u-8700-a336	2	Mercury Vessel Manf Blk (part)	
106010101-m8u-8700-a340	0	Orifice Plate	
106010101-m8u-8700-a348	0	Water Cooled Shroud Mtg Flg Assy	
106010101-m8u-8700-a333	3	Water Cooled Shroud Mtg Flange	
106010101-m8u-8700-a349	0	Flange Plug	
106010101-m8u-8700-a334	3	Transition Body	
106010101-m8u-8700-a335	3	Front Body	
106010101-m8u-8700-a337	3	Outer Window	
106010101-m8u-8700-a341	0	Course Alignment Guide	
106010101-m8u-8700-a223	8	Water Cooled Shroud Weldment	
106010101-m8u-8700-a224	2	Inflatable Seal Assembly	Supplied By Company
106010101-m8u-8700-a231	0	Inflatable Seal Guide Plate	Supplied By Company
106010101-m8u-8700-a225	4	WCS Inflatable Seal Mtg Flg	
106010101-m8u-8700-a226	4	Water Cooled Shroud Rear Sleeve	
106010101-m8u-8700-a227	4	WCS Transition Piece	

Drawing Number	Rev.	Description	Comment
106010101-m8u-8700-a228	4	WCS Front Sleeve	
106010101-m8u-8700-a229	3	WCS Inner Guide Wall	
106010101-m8u-8700-a230	2	WCS Outer Guide Wall	
Reference Drawings:			
106010101-m8e-8700-a064	4	Bendix Connector Wiring Diagram	
106010101-m8e-8700-a076	1	Plating Fixture Assembly	
106010101-m8e-8700-a077	1	Plating Fixture Weldment	
106010101-m8e-8700-a078	1	Plating Fixture Plate	
106010101-m8e-8700-a079	1	Plating Fixture Angle Bracket	
106010101-m8e-8700-a080	0	Plating Fixture Tube - .375 OD X .035 Wall	
106010101-m8e-8700-a081	2	Plating Fixture Spider	
106010101-m8e-8700-a082	0	Plating Fixture Tube - .188 OD X .006 Wall	
106010101-m8e-8700-a083	1	Plating Fixture Tube Clamp	
106010101-m8e-8700-a084	1	Plating Fixture Spacer Plate	
106010101-m8e-8700-a085	0	Plating Fixture Tube Guide	
106010101-m8u-8700-a410	0	Plating Fixture Angle Bracket	

Appendix 1

SKETCH OF KNIFE EDGE SEAL TEST FIXTURE

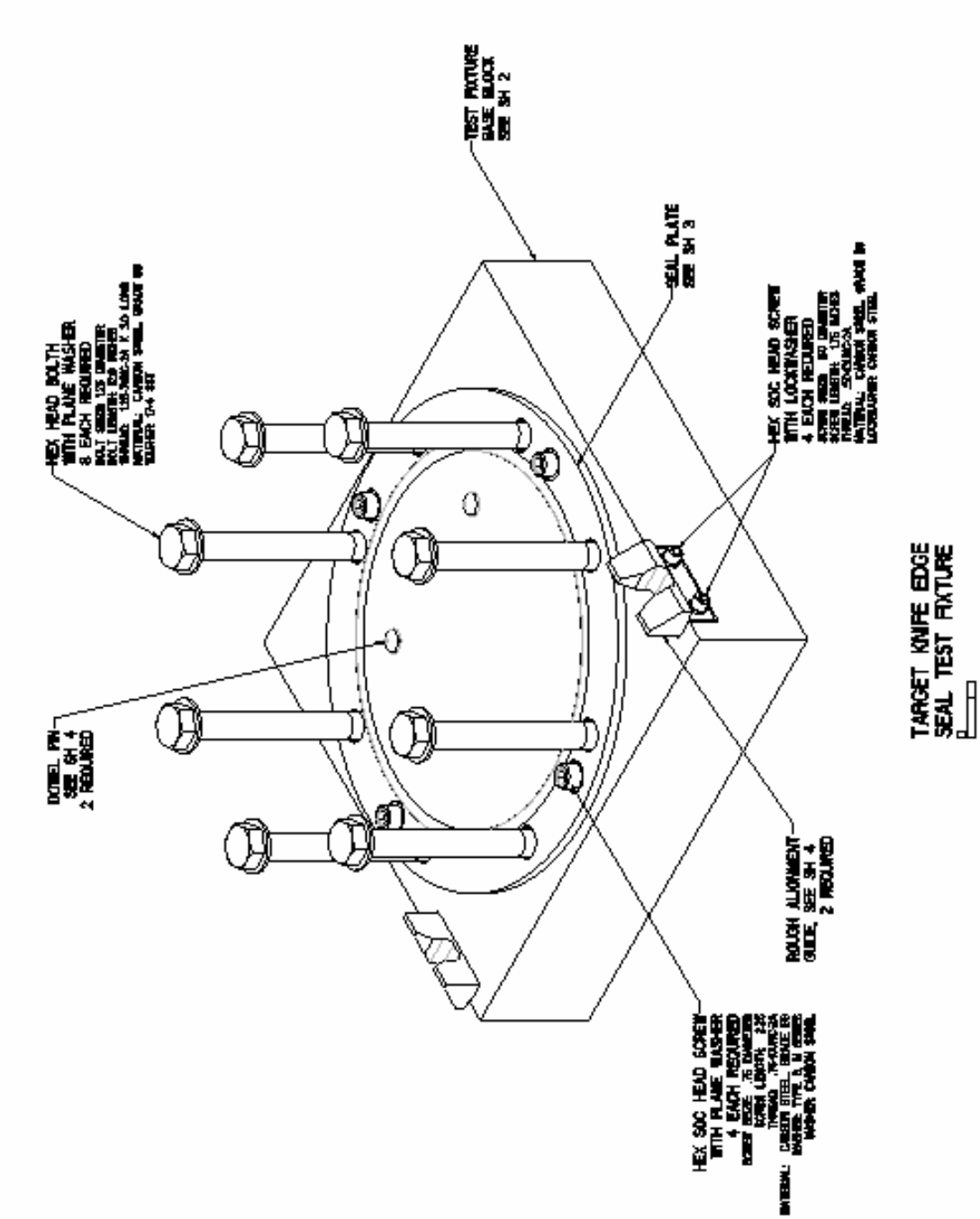

Knife Edge Seal Test Fixture Sketch, sheet 1

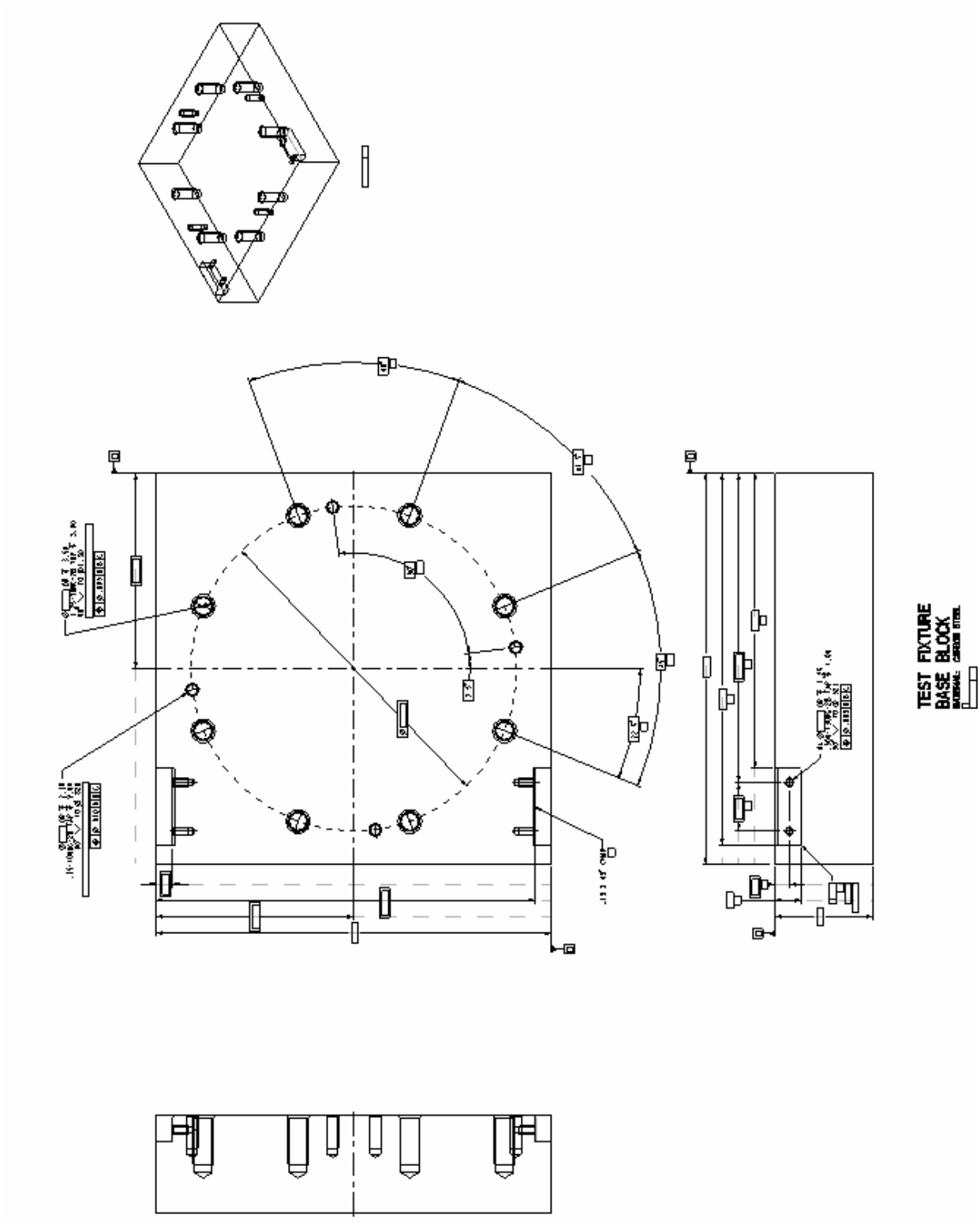

Knife Edge Seal Test Fixture Sketch, sheet 2

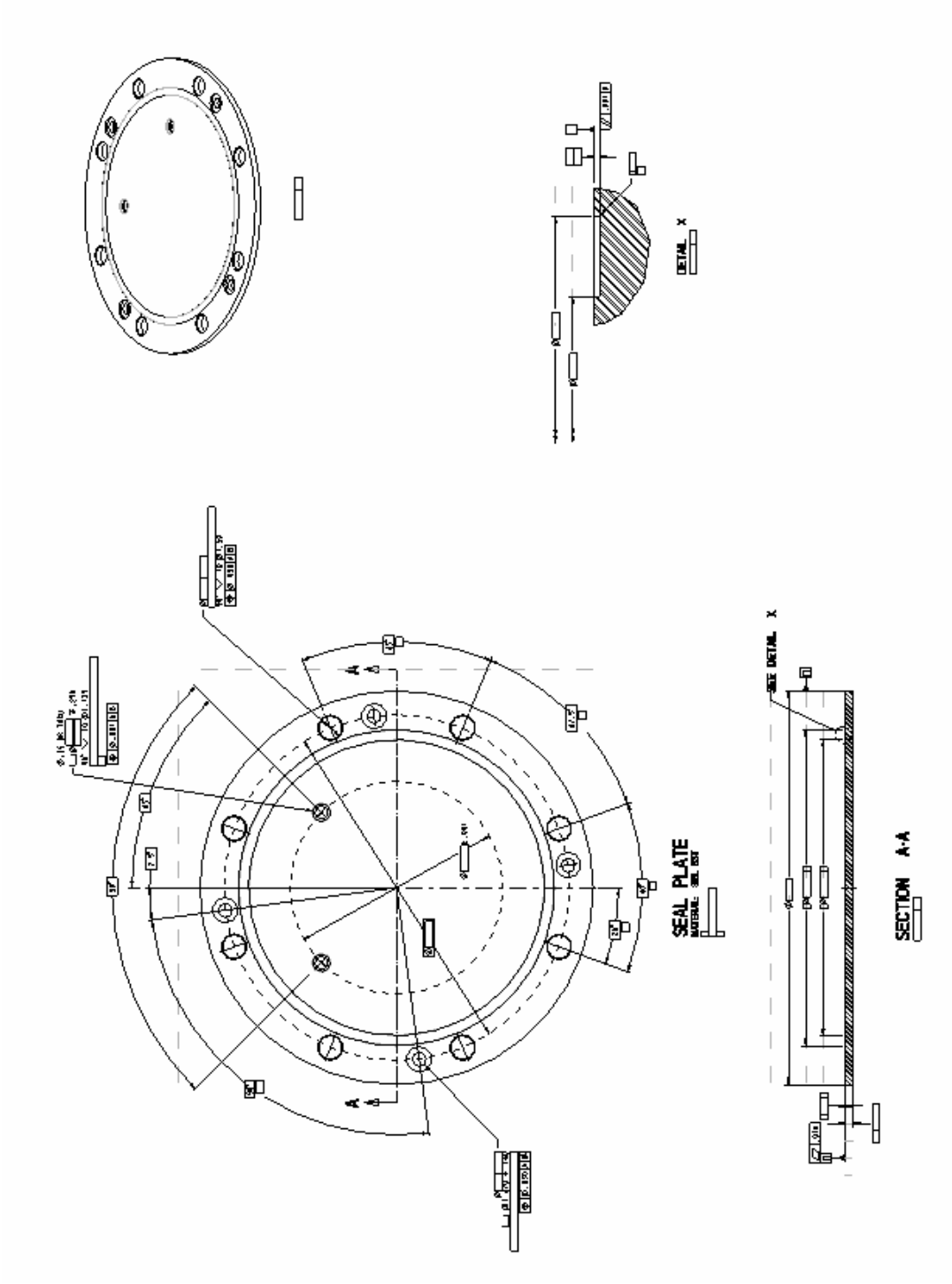

Knife Edge Seal Test Fixture Sketch, sheet 3

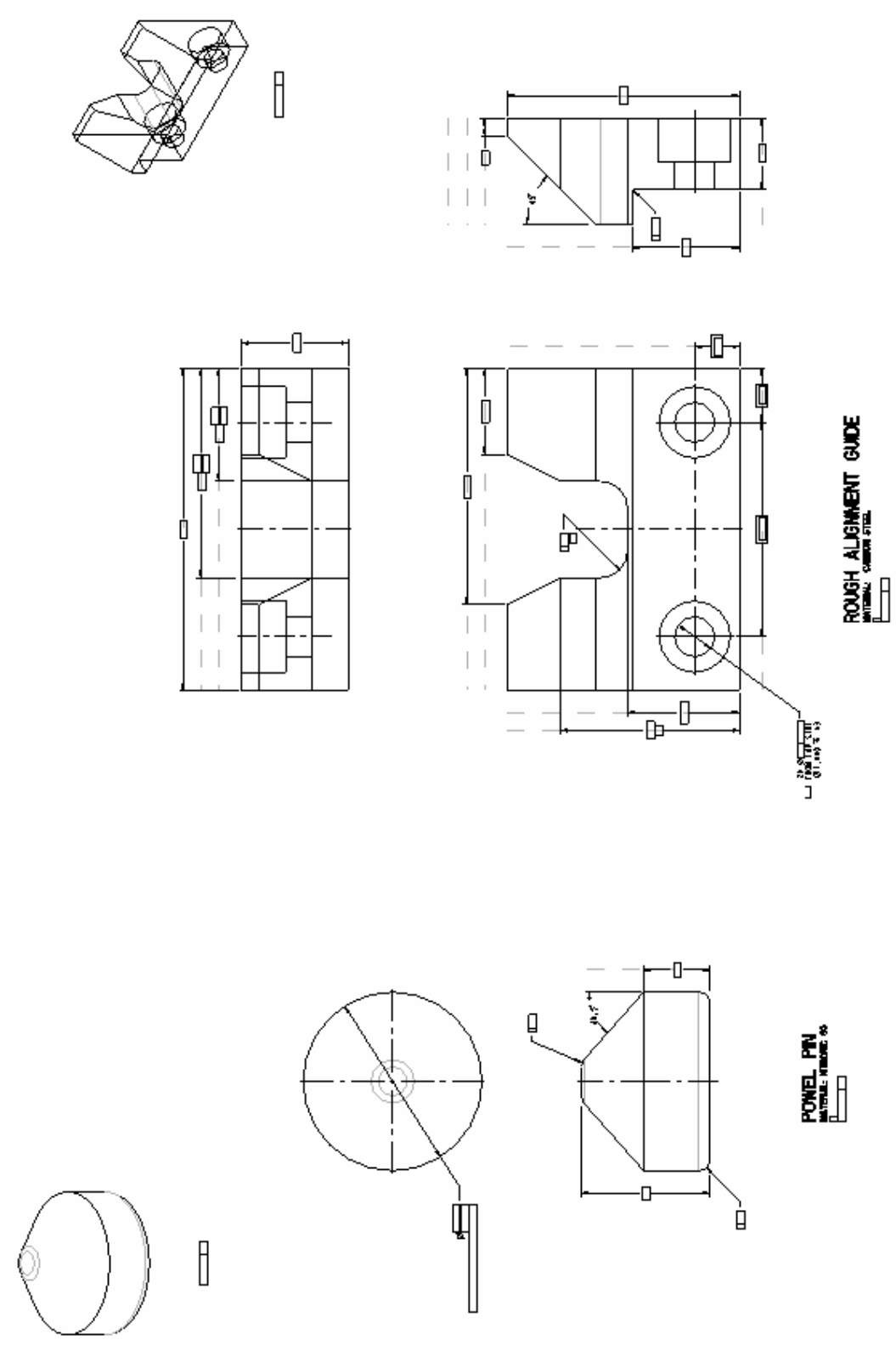

Knife Edge Seal Test Fixture Sketch, sheet 4