Capture of Tritium Released from Cladding in the Zirconium Recycle Process

Fuel Cycle Technology

Prepared for
U.S. Department of Energy
Materials Recovery and Waste Form Development Campaign

B. B. Spencer
T. B. Walker
S. H. Bruffey
G. D. DelCul

September 2016
FCRD-MRWFD-2016-000016
FCRD-MRWFD-2016-000297*(rev 1)*
ORNL/TM-2016/444
ORNL/TM-2016/531

Approved for public release.
Distribution is unlimited.

DISCLAIMER

This information was prepared as an account of work sponsored by an agency of the U.S. Government. Neither the U.S. Government nor any agency thereof, nor any of their employees, makes any warranty, expressed or implied, or assumes any legal liability or responsibility for the accuracy, completeness, or usefulness, of any information, apparatus, product, or process disclosed, or represents that its use would not infringe privately owned rights. References herein to any specific commercial product, process, or service by trade name, trade mark, manufacturer, or otherwise, does not necessarily constitute or imply its endorsement, recommendation, or favoring by the U.S. Government or any agency thereof. The views and opinions of authors expressed herein do not necessarily state or reflect those of the U.S. Government or any agency thereof.

SUMMARY

This report is issued as the first revision to FCRD-MRWFD-2016-000297.

Zirconium may be recovered from the Zircaloy® cladding of used nuclear fuel (UNF) for recycle or to reduce the quantities of high-level waste destined for a geologic repository. Recovery of zirconium using a chlorination process is currently under development at the Oak Ridge National Laboratory. The approach is to treat the cladding with chlorine gas to convert the zirconium in the alloy (~98 wt % of the alloy mass) to zirconium tetrachloride.

A significant fraction of the tritium (0–96%) produced in nuclear fuel during irradiation may be found in zirconium-based cladding and could be released from the cladding when the solid matrix is destroyed by the chlorination reaction. To prevent uncontrolled release of radioactive tritium to other parts of the plant or to the environment, a method to recover the tritium may be required.

The focus of this effort was to (1) identify potential methods for the recovery of tritium from the off-gas of the zirconium recycle process, (2) perform scoping tests on selected recovery methods using non-radioactive gas simulants, and (3) select a process design appropriate for testing on radioactive gas streams generated by the engineering-scale zirconium recycle demonstrations on radioactive used cladding.

It was determined that the off-gas from the zirconium recycle process is most likely to contain tritium as TCl in very dilute concentrations. This off-gas will also contain Ar and Cl_2. An analysis of potential recovery methods for HCl/TCl identified a chemical conversion process and a liquid scrubbing process using sodium hydroxide solution as holding the most promise for the recovery of dilute HCl from an Ar/Cl_2 gas stream. Proof-of-principle experiments were designed to demonstrate HCl recovery with both potential processes using a non-radioactive simulant off-gas stream containing deuterium chloride (DCl). Use of DCl as a non-radioactive surrogate allows analysis of the liquids associated with each process by mass spectrometry.

The chemical conversion process was designed such that the simulant gas stream would pass through two heated solid beds, with the first bed containing finely divided copper shot, or steel wool, to convert DCl to D_2, and the second bed containing CuO pellets to convert D_2 to D_2O. This then allowed recovery of D_2O by condensation for analysis. The liquid scrubbing process was designed to absorb the DCl from the gas stream using NaOH solution, which could be analyzed to determine the amount of D that had transferred into the solution.

Both methods were shown to recover D from the simulant gas stream. However, the recovery was not quantitative (~35% for both methods), indicating incomplete conversion, condensation, and/or scrubbing, or alternatively, losses of DCl to system components. An additional experimental test with DCl-containing simulant was performed in an effort to quantify the recovery of DCl by a NaOH liquid scrubbing system.

The liquid scrubbing system was selected for implementation in the planned hot-cell demonstration testing of the zirconium recycle process due to its simple design and lack of dependence on hot cell utilities. The parts for the hot-cell scrubber were purchased from commercial sources, with materials of construction including glass and polymeric materials. This system was successfully assembled.

This page intentionally left blank.

CONTENTS

SUMMARY iii

TABLES vii

ACRONYMS xi

1. INTRODUCTION 1
- 1.1 Background 1
- 1.2 Objectives 1
- 1.3 Estimated Off-Gas Composition of Zirconium Chlorination Process 2

2. ANALYSIS OF POTENTIAL HCl RECOVERY METHODS 4
- 2.1 Condensation 4
- 2.2 Absorption—Liquid Scrubbing 5
- 2.3 Chemical Trapping by Conversion 6
- 2.4 Adsorption—Salt Complexes 7
- 2.5 Adsorption—Physi-sorption 7

3. SELECTED CHEMICAL PROCESSES AND SYSTEM DESIGNS 8
- 3.1 Conceptual Process Design for Chemical Conversion 8
- 3.2 Conceptual Process Design for Liquid Scrubbing 10

4. MATERIALS AND METHODS 12
- 4.1 Demonstration of Chemical Conversion Process 13
- 4.2 Demonstration of Liquid Scrubbing Process 16

5. **DISCUSSION** 17
- 5.1 A System to Support Hot-Cell Zirconium Processing Operations 17

6. REFERENCES 19

This page intentionally left blank.

TABLES

Table 1. Quantities of hydrogen isotopes in typical used fuel[a] 2
Table 2. Basic description of fuel assemblies 3
Table 3. Estimated composition of off-gas stream from cladding chlorination process 4
Table 4. Vapor pressure of chlorine compounds[a] 5
Table 5. Concentrations of components in prototypic off-gas stream 10
Table 6. Analysis of condensate samples from conversion-cold trapping tests 15

This page intentionally left blank.

FIGURES

Figure 1. Solubility of chlorine in water solutions of HCl and NaCl—salt concentrations in wt % (Adapted from Schmittinger 2000[9]). 6

Figure 2. Adsorption capacity of molecular sieves (a) type 5A and (b) type 13X to trap HCl as a function of the partial pressure of gaseous HCl at 25 °C (Adapted from Berl 1961[15]). 8

Figure 3. Conceptual process design for recovery of HCl from dilute off-gas streams by chemical conversion. 9

Figure 4. Conceptual process design for recovery of HCl from dilute off-gas streams by chemical conversion. 11

Figure 5. Conceptual process design for recovery of HCl from dilute off-gas streams by liquid scrubbing. 12

Figure 6. Experimental system for conversion approach to collecting deuterium as water. 13

Figure 7. Condensate recovered from second chemical conversion test. 14

Figure 8. Caustic scrubber to capture DCl from the synthetic off-gas stream. 16

Figure 9: Schematic of off-gas treatment system for use in zirconium recycle hot-cell demonstration 18

Figure 10: Assembled scrubber system 18

This page intentionally left blank.

ACRONYMS

BWR	boiling water reactor
g/MTIHM	gram(s) per metric ton initial heavy metal
ICP-MS	Inductively Coupled Plasma Mass Spectrometry
NIST	National Institute of Standards and Technology
ORIGEN	ORNL Isotope Generation and Depletion Code
ORNL	Oak Ridge National Laboratory
PWR	pressurized water reactor
UNF	used nuclear fuel
UT	The University of Tennessee

This page intentionally left blank.

CAPTURE OF TRITIUM RELEASED FROM CLADDING IN THE ZIRCONIUM RECYCLE PROCESS

1. INTRODUCTION

1.1 Background

Zirconium may be recovered from the Zircaloy® cladding of used nuclear fuel (UNF) for recycle or to reduce the quantities of high-level waste destined for a geologic repository. Either approach reduces the cost of recycling the fuel components of UNF. Zircaloy cladding contains high-value hafnium-free zirconium that may be recycled and result in substantial cost savings in the manufacture of new cladding. Alternatively, if the cladding is not recycled, processing reduces the volume of high-level waste zirconium significantly. The activity of the recovered zirconium should allow it to be treated as a low-level waste that may be disposed of by much less expensive means than a geologic repository. The cladding mass is about 25% of the fuel assembly mass and represents a substantial decrease in the amount of waste that must be disposed of in a geologic repository.

Recovery of zirconium using a chlorination process is currently under development at the Oak Ridge National Laboratory. The approach is to treat the cladding with chlorine gas to convert the zirconium in the alloy (~98 wt % of the alloy mass), to zirconium tetrachloride. The $ZrCl_4$ is volatile and readily separates from the non-volatile components, which may include highly radioactive oxide fuel fragments imbedded in the cladding by fission recoil. The general reaction of the chlorination process is shown in Eq. 1.

$$\mathrm{Zr(s)} + 2\mathrm{Cl_2(g)} \rightarrow \mathrm{ZrCl_4(g)}\,. \tag{1}$$

The alloying components may include either tin or niobium as major components (~2 wt %), and minor or trace amounts of iron, nickel, and chromium, and traces of oxygen and nitrogen as impurities. The Sn and Nb may also volatilize during the process and subsequently can be separated from the Zr by fractionation. The other metals remain as a chloride ash. The product $ZrCl_4$ is recovered as a solid salt by condensation when cooled to less than about 300°C. A full description of the process was previously published.[1]

A fraction of the tritium (0–96%) produced in nuclear fuel during irradiation is found in zirconium based cladding.[2] Tritium is not found in stainless steel (SS) cladding, nor are the expected amounts found in the used fuel. Tritium easily diffuses through the thin SS clad and enters the reactor coolant. Because tritium is found in both the used fuel and the Zircaloy cladding, it is generally thought that the tritium that migrates to the Zircaloy cladding is chemically trapped in the cladding as a zirconium hydride. The tritium is released from the cladding when it is heated for a prolonged time or when the solid matrix is destroyed by the chlorination reaction (Eq. 1). To prevent uncontrolled release of radioactive tritium to other parts of the plant or to the environment, a method to recover the tritium is required.

1.2 Objectives

The focus of this effort was to (1) identify potential methods for the recovery of tritium from the off-gas of the zirconium recycle process, (2) perform scoping tests on selected recovery methods using non-radioactive gas simulants, and (3) select a process design that is appropriate for testing on radioactive gas streams generated from engineering-scale zirconium recycle demonstrations on radioactive used cladding.

1.3 Estimated Off-Gas Composition of Zirconium Chlorination Process

Unambiguous identification of the chemical form of the tritium in the cladding is not available. It is known that heating the cladding to high temperatures releases the tritium.[2] Conversion of the metal cladding components to chloride forms is also expected to release the tritium, either as free hydrogen that can react with chlorine to produce HCl (i.e., ^{3}HCl) (Equation 2) or directly as ^{3}HCl during the chlorination reaction, as shown in Equation 3.

$$H_2(g) + Cl_2(g) \rightarrow 2HCl(g) \tag{2}$$

$$ZrH_x(s) + (2 + x/2)Cl_2(g) \rightarrow ZrCl_4(g) + xHCl(g) \tag{3}$$

In the Zr recovery process, the $ZrCl_4$ is condensed as a fine particulate, solid phase. There is the potential that a portion of the ^{3}HCl will hydrogen bond to the $ZrCl_4$, or other chloride product ($SnCl_4$ or $NbCl_3$), complicating the separation of tritium from the product. Until further data are available, it is assumed that the ^{3}HCl remains in the gas phase when the metal chlorides condense. This assumption is reasonable in view of the high temperatures at which the subject metal chlorides desublime. Specifically, the boiling points are HCl, −84.9 °C; $SnCl_4$, 114 °C; $NbCl_5$, 254 °C; and $ZrCl_4$, 331 °C.[3]

The quantities of hydrogen (including ^{3}H) in modern pressurized water reactor (PWR) UNF are summarized in Table 1 and are shown to be very small. To estimate the concentration of the ^{3}HCl concentration in the off-gas from the Zircaloy chlorinator, the amount of Zircaloy associated with the ^{3}H is required. Table 2 provides data on the characteristics of both PWR and boiling water (BWR) reactor fuel assemblies. From this table it is readily calculated that BWR assemblies contain 0.543 kg Zircaloy/kg U whereas PWR assemblies contain 0.235 kg Zircaloy/kg U. Thus, all other variables being equal, the off-gas from processing PWR Zircaloy should be higher in ^{3}H concentration than off-gas from processing BWR Zircaloy assemblies. As a first step, consider the case of processing PWR Zircaloy, realizing that the recovery of ^{3}H from leaner off-gas streams will be more difficult.

Table 1. Quantities of hydrogen isotopes in typical used fuel[a]

Isotope	Activation products		Fission products		Activation + fission products	
	(g/MTIHM)	(Ci/MTIHM)	(g/MTIHM)	(Ci/MTIHM)	(g/MTIHM)	(Ci/MTIHM)
^{1}H	1.35E-2	0	0	0	1.35E-2	0
^{2}H	1.32E-5	0	0	0	1.32E-5	0
^{3}H	2.19E-2	2.11E+2	6.84E-2	6.60E+2	9.03E-2	8.71E+2

[a]Oak Ridge National Laboratory (ORNL) Isotope Generation and Depletion Code (ORIGEN) calculation based on pressurized water reactor (PWR) fuel at a burnup of 55 GWd/MTIHM and cooling time of five years.

Table 2. Basic description of fuel assemblies

Characteristic	BWR	PWR	Reference
Fuel Pin O.D. (cm)	1.252	0.95	Croff and Alexander 1980 [4]
Fuel Pin Active Length (m)	3.759	3.658	
Fuel Pin Total Length (m)	4.064	3.851	
Fuel Pins/Assembly	63	264	
U/Assembly (kg)	183.3	461.4	
UO_2/Assembly (kg)	208.0	524.4	
Zr/Assembly (kg)[a]	99.5	108.4	
Cladding O.D. (mm)	12.294	9.4996	For 8 × 8 BWR: Cochran and Tsoulfanidis 1999 [5] For 17 × 17 PWR: Gehin and Primm 1997 [6]
Cladding thickness (mm)	0.889	0.5715	
Pellet O.D. (mm)	10.274	8.1915	
Inferred clearance (mm)	0.121	0.08255	

[a]Includes Zircaloy control rod guide thimbles.

Additional assumptions are required to obtain an order of magnitude estimate of the ^3H concentration in the off-gas stream:

- Half of the hydrogen (tritium) in the fuel migrated to, and resides in, the cladding.
- Feed gas stream is a mixture of 50% Ar—50% Cl_2 by volume.
- Zirconium content of cladding is completely converted to $ZrCl_4$ (true for continuous operations).
- Remaining metal constituent is tin and is completely converted to $SnCl_4$.
- No other components other than $ZrCl_4$ and $SnCl_4$ are volatile except the hydrogen (tritium).
- The hydrogen arising from the fuel cladding is converted to HCl.
- Average chlorine utilization over the entire time of metal conversion is 95%.
- The $ZrCl_4$ and $SnCl_4$ products are condensed as solid salts.
- The remaining off-gas stream consists of the Ar, residual Cl_2, residual $SnCl_4$, and HCl.

Using the listed assumptions, the average off-gas stream composition for the zirconium chlorination process was estimated by material balance; the results are shown in Table 3. All hydrogen arising from the dry cladding results in an HCl concentration of about 4 ppmv (parts per million by volume); the tritiated HCl (^3HCl) portion is about 3 ppmv. The activity of tritium in the off-gas is estimated at 3.47 mCi/std L. (Note: Some modern claddings use niobium instead of tin as the minor alloy component. Niobium also volatilizes as $NbCl_3$ and/or $NbCl_5$, and for such modern claddings much of the preceding remarks apply equally well.)

Table 3. Estimated composition of off-gas stream from cladding chlorination process

Component	Concn. (v/v)
Ar	0.925
Cl_2	0.0476
HCl	1.19E-06
^{2}HCl	5.83E-10
^{3}HCl	2.66E-06
TOTAL	1.000
^{all}HCl	3.85E-06

2. ANALYSIS OF POTENTIAL HCl RECOVERY METHODS

Several methods were considered for separation of ^{3}HCl from the Ar-Cl_2 mixture. These methods are summarized in this section.

2.1 Condensation

The normal boiling points of Ar, HCl and Cl_2 are −189.3 °C, −84.9 °C, and −34.6 °C, respectively.[3] This indicates Cl_2 condenses before HCl. The vapor pressures of chloride compounds of interest are shown in Table 4, with the vapor pressure of HCl being 25.7 atm and that of Cl_2 being 3.6 atm (at 0 °C). If the off-gas is at a total pressure of about 1 atm, the partial pressure of the HCl in the off-gas is less than its vapor pressure at temperatures as low as −100 °C. Thus none of it would condense (i.e., a partial pressure of ~4310^{-6} atm, based on Table 3, versus a vapor pressure of about 0.4 atm as shown in Table 4). In contrast, the majority of Cl_2 present in the off-gas stream would condense at −100 °C, and the remainder subsequently could condense at lower temperatures with the HCl. Thus, to use condensation as an HCl recovery method, a two-stage condenser system would be required for separation of Cl_2 from HCl.

However, the freezing points of Cl_2 (−101.0 °C) and HCl (−114.8 °C) present practical concerns for recovery by condensation. Typical coolants such as liquid N_2 or liquid Ar would tend to condense both Cl_2 and HCl as solids. If the solids were acceptable, use of liquid Ar would be preferable because liquid N_2 can condense the Ar from the off-gas stream of the chlorination process, causing excessive pressures as the trap warms to room temperature.

A further concern regarding HCl recovery by condensation is that very low concentrations of HCl may be soluble in Cl_2. Solubility would manifest itself as an apparent condensation of both compounds in the first liquid product condenser, or there could be partitioning of the HCl between liquid and gas phases, complicating the recovery and measurement of the ^{3}HCl. This concern may only apply at extremely low concentrations of HCl because liquefaction of Cl_2 has been cited as a method to industrially separate the HCl impurity from the Cl_2 product.[7] Should there be slight solubility of HCl in liquid Cl_2, the addition of HCl containing only natural isotopic ratios of hydrogen upstream of the separation process saturates the liquid phase with mostly the HCl. This technique leaves most of the ^{3}HCl in the gas phase so that it may be recovered for analysis. Condensation processes do appear to present merit, but the concerns raised in this analysis indicate that the level of complexity for the condensation operation may be undesirable for use in radioactive operations conducted in hot cells.

Table 4. Vapor pressure of chlorine compounds[a]

T(°C)	$ZrCl_4$	$SnCl_4$	Cl_2 (lo)	Cl_2 (hi)	HCl (lo)	HCl (hi)
	P(atm)	*P(atm)*	*P(atm)*	*P(atm)*	*P(atm)*	*P(atm)*
-195.8	1.91E-113	8.09E-57	1.87E-39	1.81E-11	2.15E-11	3.90E-07
-100	2.90E-28	3.30E-08	1.34E-02	1.71E-02	3.87E-01	4.01E-01
-75	1.19E-22	3.51E-06	1.10E-01	1.12E-01	1.66E+00	1.68E+00
-50	1.52E-18	9.38E-05	4.66E-01	4.69E-01	4.811939	5.10E+00
-25	2.09E-15	1.07E-03	1.33E+00	1.45E+00	1.08E+01	1.24E+01
0	6.22E-13	7.03E-03	2.96E+00	3.60E+00	2.03E+01	2.57E+01
25	6.24E-11	3.14E-02	5.54E+00	7.64E+00	3.39E+01	4.71E+01
100	1.04E-06	6.80E-01	1.98E+01	3.90E+01	9.91E+01	1.79E+02
200	2.44E-03	7.41E+00	5.21E+01	1.50E+02	2.33E+02	5.49E+02
300	3.17E-01	3.21E+01	9.38E+01	3.56E+02	3.97E+02	1.14E+03
400	8.95E+00	8.68E+01	1.39E+02	6.51E+02	5.71E+02	1.91E+03
450	3.30E+01	1.28E+02	1.62E+02	8.26E+02	6.59E+02	2.35E+03

[a]Calculated with the Antoine equation using coefficients found at the NIST Webbook.[8] For some compounds, the reference gives two correlations, one for a low-temperature range and one for a high-temperature range. Where two correlations are provided, the table shows calculated values for both (hi and lo) correlations for all temperatures listed although the listed temperatures may be outside the recommended range. Green highlighted values indicate those temperatures within the range of the correlation; all others are extrapolated using the same correlation. Lowest temperature shown is the boiling point of liquid nitrogen.

2.2 Absorption—Liquid Scrubbing

Hydrogen chloride may be removed from gaseous Cl_2 by scrubbing with water, and it has been used industrially.[9] HCl is more soluble in water and is readily scrubbed. Much of the Cl_2 present within the off-gas will pass through the scrubber, but a fraction will enter solution and convert to HCl. $SnCl_4$ is also soluble in cold water and will decompose in warm water to form HCl and possibly $SnOCl_2$ or SnO_2. In a recirculating scrubber, as might be used to collect ^{3}HCl for analysis, the acidity of the water increases as HCl concentration increases. The solubility of Cl_2 increases as the acidity increases, but decreases as chloride salt concentration increases (Figure 1). Scrubber solutions of NaCl or KCl, augmented with NaOH or KOH to neutralize the HCl as it is absorbed, may be the most effective. The resulting Cl_2 gas stream will contain water vapor: Industrially the stream is dried with concentrated H_2SO_4. Because the small-scale tests will likely not require the recycle of Cl_2, a drying step will not be necessary.

Carbon tetrachloride (CCl_4) has also been utilized for chlorine scrubbing industrially.[9] Chlorine is very soluble in CCl_4, whereas the HCl impurity is not soluble. Tin tetrachloride is also soluble in CCl_4.[10] To achieve separation of Cl_2 from HCl, HCl could be recovered by a second scrubber. Industrially, recovered Cl_2 is desorbed from the CCl_4 scrubber solution by heating, but in an experimental program it may be neutralized and sent to waste.

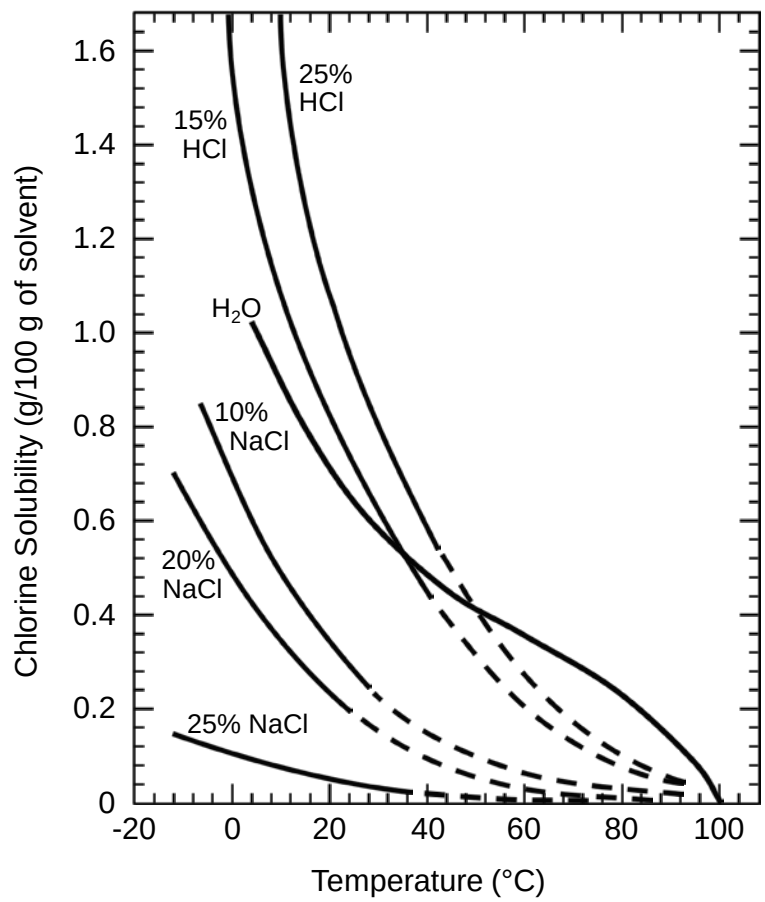

Figure 1. Solubility of chlorine in water solutions of HCl and NaCl—salt concentrations in wt % (Adapted from Schmittinger 2000[9]).

2.3 Chemical Trapping by Conversion

In addition to direct recovery of tritium through HCl capture, chemical conversion was evaluated for the potential to convert HCl to other forms that would permit straightforward tritium recovery. In most gas-solid reactions involving Cl_2 and HCl, a selective chemical reaction to exclusively convert or adsorb only one of these compounds, and thus effect a separation, has not yet been identified. However, gas-solid reactions of HCl and Cl_2 may produce different products when reacting with the same sorbent. For example, HCl reacts with copper to form copper chloride and release the hydrogen, while Cl_2 produces only solid copper chloride (Equations 4 and 5). The hydrogen released from the reaction of HCl with a copper sorbent subsequently could be converted to water with a hot copper oxide catalyst (Equation 6).

$$\mathrm{HCl(g)+Cu(s)\rightarrow CuCl(s)+\tfrac{1}{2}H_2(g)} \qquad (\Delta G \sim -9.2 \text{ kcal/mol at 100 °C}) \qquad (4)$$

$$\mathrm{Cl_2(g)+2Cu(s)\rightarrow 2CuCl(s)} \qquad (\Delta G \sim -55.1 \text{ kcal/mol at 100 °C}) \qquad (5)$$

$$\mathrm{H_2(g)+CuO(s)\rightarrow Cu(s)+H_2O(g)} \qquad (\Delta G \sim -24.5 \text{ kcal/mol at 100 °C}) \qquad (6)$$

The tin chloride, which is in lesser abundance compared to the Cl_2, will also consume some copper, as shown in Equation 7.

$$\mathrm{2Cu(s)+SnCl_4(g)\rightarrow 2CuCl(s)+SnCl_2(s)} \qquad (\Delta G \sim -3.5 \text{ kcal at 100 °C}) \qquad (7)$$

The copper could be replenished periodically, and the copper oxide catalyst could be regenerated with oxygen periodically. Such a two-step method appears feasible, but because the first copper bed will consume both HCl and Cl_2, copper consumption on an industrial scale may pose an economic concern. The conversion operation potentially could be performed with a less expensive d-block metal, such as iron (Eqn. 8).

$$2HCl(g) + Fe(s) \rightarrow FeCl_2(s) + H_2(g) \qquad (\Delta G \sim -23.9 \text{ kcal/mol at } 100\ ^\circ C) \qquad (8)$$

This process appears to achieve disposal of the residual Cl_2 while recovering the tritium for analysis using primarily solid reactants, which is attractive for hot cell operations.

2.4 Adsorption—Salt Complexes

A literature review indicates that halides can be separated from their acid form by adsorption processes that produce salt complexes. A well-known example of such a process is the use of NaF to sorb HF while F_2 passes through the sorption column. The salt complex is often called sodium bifluoride (NaF·HF or $NaHF_2$). The adsorption is reversible, with adsorption occurring at low temperatures (around 25 °C) and desorption occurring above 150 °C. Little information on analogous adsorption processes for HCl was found. Available spectroscopic data indicate that cesium halides, such as CsCl, hydrogen bond with HCl.[11] Sodium fluoride may also sorb HCl via hydrogen bonding. No information on the sorption capacity of high surface area alkali halides for HCl was found. Although recovery of HCl through the formation of salt complexes seems to hold promise, the fundamental science of such a process appears unconfirmed.

2.5 Adsorption—Physi-sorption

The most common solid adsorbents applicable to the present application are activated carbon and zeolites. The molecular diameter of Cl_2 is about 8.2 Å (EMDMillipore[12]) and that of HCl ranges over 4–5 Å (Eng and Greenwood[7]). Another reference (Semco[13]) indicates that both molecules have kinetic diameters between 3–4 Å and recommends using a 3A molecular sieve for removing trace amounts of these compounds from air to improve indoor air quality. Due to the disparity in this foundational data, improved information on the molecular sizes is needed before the viability of solid adsorbents for HCl recovery can be evaluated. However, there are some indications within the literature that such processes may be practical.

Activated carbon (ChemSorb 1202) is recommended by one manufacturer for adsorption of acid gases and chlorine.[14] This product has a very large specific surface area (1000 m^2/g) and pore sizes ranging from 5–10 Å. It does not appear to selectively adsorb either of the two molecules (i.e., Cl_2 or HCl), thereby providing little advantage over other processes that collect both species together. In operation, the sorbed compounds would need to be released in a regeneration step (heating the sorbent while flowing a carrier gas through the bed of sorbent) and then captured by another technique for analysis.

Zeolite-based molecular sieves have greater affinity for polar molecules (e.g., HCl). Eng and Greenwood[7] recommend a zeolite with a 5 Å aperture for sorbing HCl from a Cl_2 product. Berl[15] provides a graphic for the HCl capacity of both 5A and 13X molecular sieves as shown in Fig. 2. Capacity of about 13–21 wt % is indicated at a temperature of 25 °C, but only at very high gas phase HCl concentrations. Additional data are needed on how these molecular sieves (or at least one of them) perform at very low HCl concentrations. Alternately, additional HCl (naturally occurring hydrogen) could be added to the off-gas stream to boost the total HCl partial pressure to around 1 mm Hg (concentration of ~1.4310^{-3} v/v) to capture a sufficient fraction of the ^{3}HCl to provide a reliable analysis. Cooling of the molecular sieve trap

may also improve its performance, particularly for lean HCl streams. This approach appears promising for HCl recovery, but additional data are needed on how these molecular sieves (or at least one of them) perform in the present application.

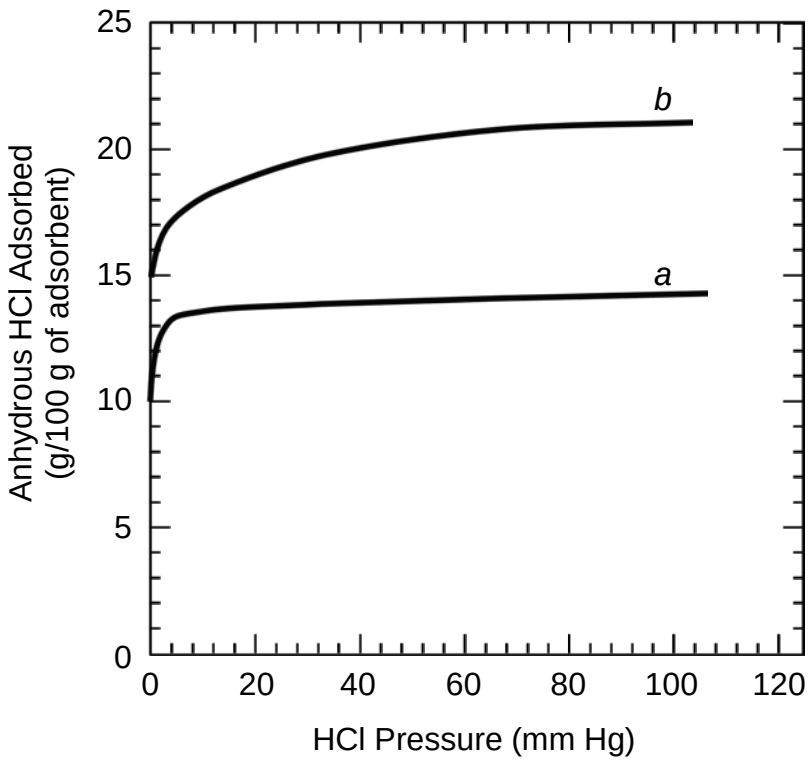

Figure 2. Adsorption capacity of molecular sieves (a) type 5A and (b) type 13X to trap HCl as a function of the partial pressure of gaseous HCl at 25 °C (Adapted from Berl 1961[15]).

3. SELECTED CHEMICAL PROCESSES AND SYSTEM DESIGNS

Upon completion of the literature review, chemical conversion and liquid scrubbing were determined to hold the most promise for the recovery of dilute HCl from an Ar/Cl_2 gas stream for near term application. Condensation appears excessively complex for hot cell operations, and the remaining technologies that were evaluated all require a level of fundamental research and development that is outside the scope of this effort.

Proof-of-principle experiments to demonstrate HCl recovery with both selected processes were designed to be performed with the use of a non-radioactive simulant off-gas stream. Deuterium chloride (DCl) is readily available in gaseous form, and deuterium concentrations in the recovered water from the chemical conversion process and in the liquid scrubber solution can be determined by mass spectrometry.

3.1 Conceptual Process Design for Chemical Conversion

A process design for the chemical conversion process is shown in Figure 3.

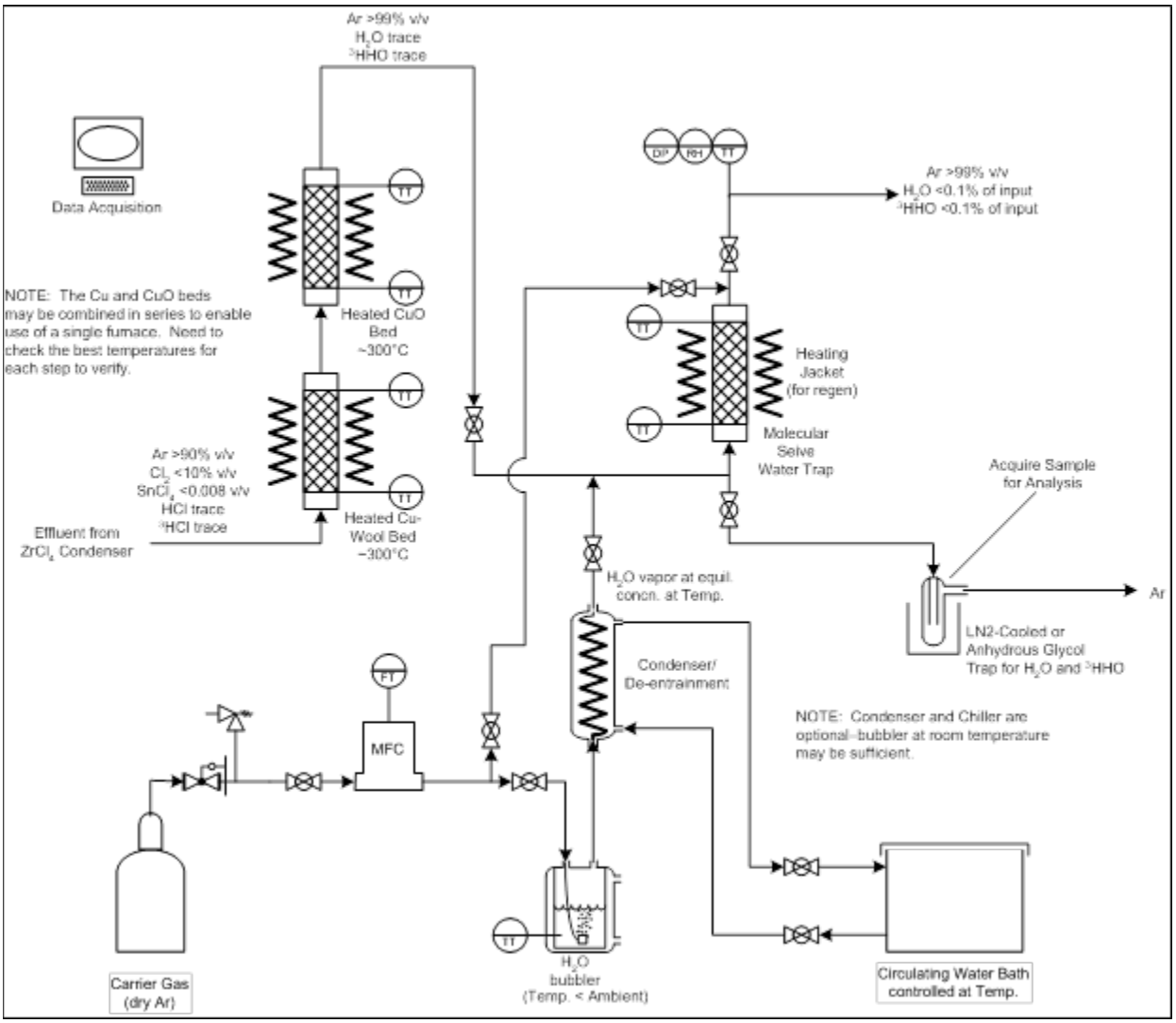

Figure 3. Conceptual process design for recovery of HCl from dilute off-gas streams by chemical conversion.

In this design, the simulated effluent from the zirconium recycle process is expected to contain primarily Ar, Cl_2, $SnCl_4$, and HCl in the concentrations shown in Table 5. This stream is directed through a heated sorbent column containing Cu beads (iron or steel wool will also work and are less expensive). The effluent from the copper bed is assumed to then contain ^3H as hydrogen gas, based on Equation 4, and very little chlorine, based on Equation 5. The ^3H-containing effluent is directed into a heated CuO bed where the hydrogen gas is converted to water as in Equation 6. This water vapor can be condensed through a variety of techniques; adsorption on regenerable molecular sieve sorbents and recovery through condensation with a cold trap are both shown in Figure 3. This system is not selective, and it will consume Cl_2 and $SnCl_4$ in addition to converting HCl (Equations 5, 7). This approach is intended to recover the tritium in concentrated form and is intended for small-scale experiments. It is not likely to be the method of choice for full-scale or commercial applications because of the large amounts of metal chloride waste that would be produced.

Table 5. Concentrations of components in prototypic off-gas stream

Component	Concentration (%v/v)
Ar	90
Cl_2	10
$SnCl_4$	0.008
HCl/^{3}HCl	trace

In the case of the proof-of-principle experiments reported in Sect. 4, the following simplifications were incorporated:

1) DCl was used as a stand-in for all of the isotopically different HCl compounds, with a total concentration in the gas stream of ~2% v/v.
2) $SnCl_4$ and Cl_2 were not included in the prototypic stream.
3) The reducing metal was iron (as steel wool); the surface area per unit mass was much greater than that of the available copper shot.
4) A cold trap was selected to condense the water present in the effluent, and the molecular sieve trap was not utilized.

Features of a simplified system using blends of bottled gases are illustrated in Fig. 4.

3.2 Conceptual Process Design for Liquid Scrubbing

For the conceptual liquid scrubbing system shown in Figure 5, the effluent from the zirconium chlorination process is sent directly into a packed column scrubber. This scrubber will remove HCl and $SnCl_4$ from the off-gas stream while allowing the bulk of the Cl_2 to pass through the column. The scrubber can be equipped with a recirculating scrub solution, if desired, which will allow for pH adjustment and sampling of the solution at selected intervals. The effluent from the liquid scrubber is directed through a condenser to remove any aerosols entrained within the gas, and then can either be passed through a chlorine neutralization column or vented directly. Consequently, the collected tritium is diluted in the comparatively much larger volume of scrubber water that is used. The liquid scrubber can be water or a solution of NaCl or KCl augmented with NaOH or KOH.

This system is more appropriate for an industrial scale operation because (1) of its selectivity for HCl, (2) it does not consume excess amounts of reagents, (3) it does not produce large amounts of copper bearing waste, and (4) it has the ability to recycle the chlorine gas back into the zirconium recycle process. To recycle chlorine to the zirconium processing step will require that chlorine gas first be dried; otherwise, the water vapor will convert a portion of the zirconium to non-volatile oxide forms that report to the waste systems.

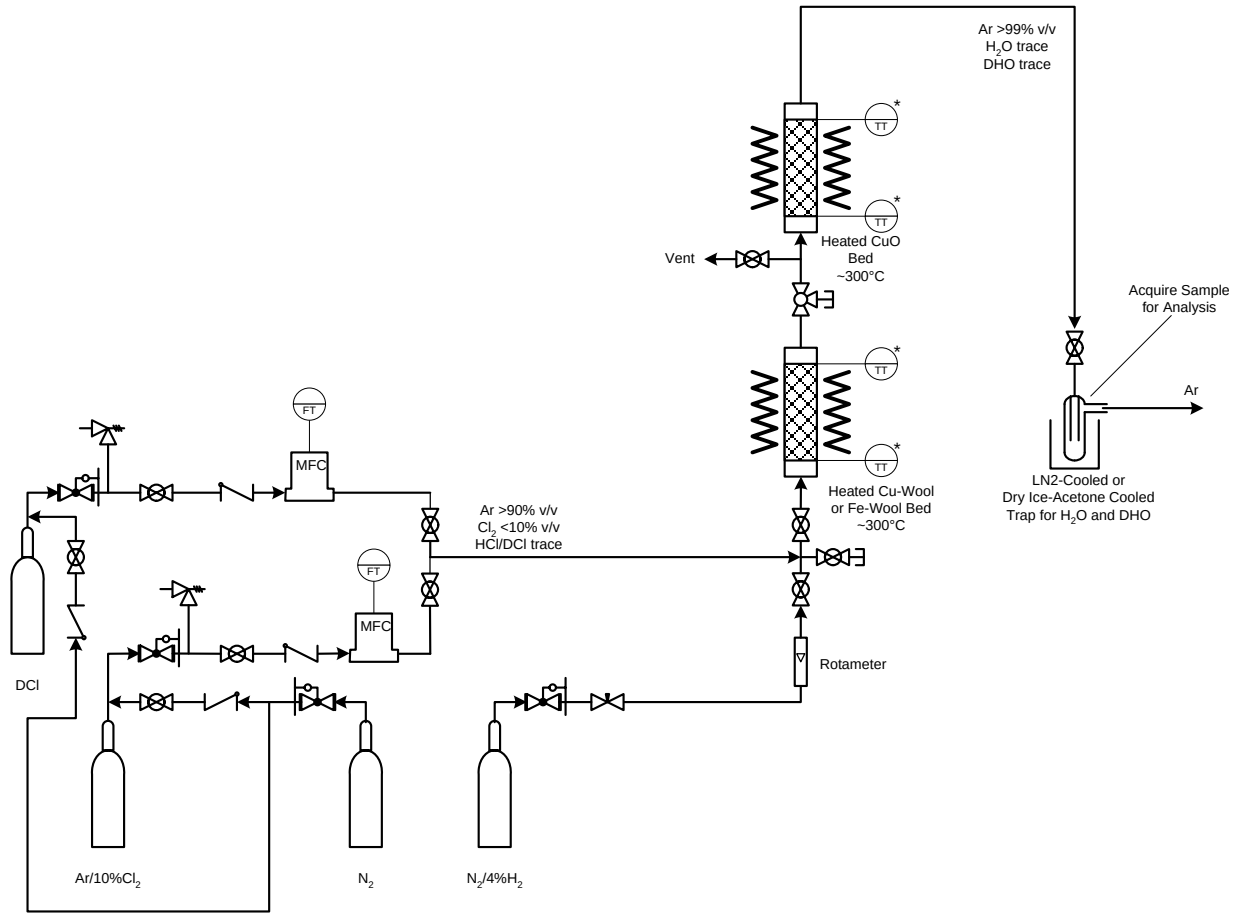

Figure 4. Conceptual process design for recovery of HCl from dilute off-gas streams by chemical conversion.

For the proof-of-principle experiments described here, the following simplifications were implemented:

1) DCl was used as a stand-in for all of the isotopically different HCl compounds, with a total concentration in the gas stream of ~2% v/v.
2) $SnCl_4$ and Cl_2 were not included in the prototypic stream.
3) A recirculating scrubber was not required due to the short duration of tests.
4) The scrubber was a liquid column scrubber with ceramic frit to disperse the gas as small bubbles.
5) Soda-lime neutralization was not required because Cl_2 was not included in the prototypical gas stream.

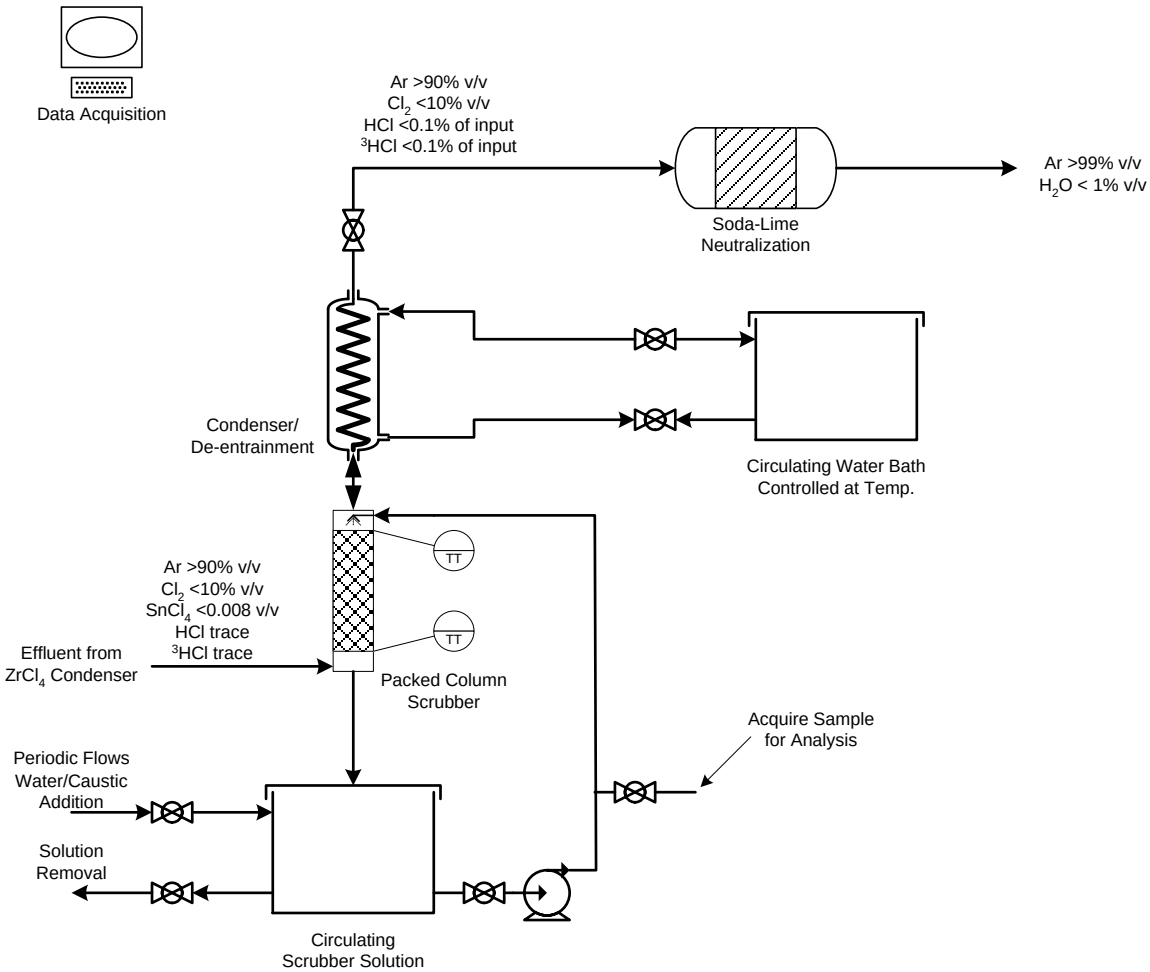

Figure 5. Conceptual process design for recovery of HCl from dilute off-gas streams by liquid scrubbing.

4. MATERIALS AND METHODS

The proof-of-principle experiments were conducted using these two proposed HCl/^{3}H recovery methods. Both were performed using a gas stream composed of ~2% v/v DCl with the balance being Ar. The DCl was procured from Sigma-Aldrich in a 450 mL gas cylinder (99% atom% DCl). Due to the corrosive nature of HCl and chlorine, care was taken throughout the experiments to purge the regulator, tubing, and capture beds with inert gas following each run. Although the concentration of HCl in the zirconium recycle effluent is expected to be at trace levels, using a DCl concentration of 2% v/v simplifies the experimental design, and the concentration is still sufficiently low for these proof-of-principle demonstrations. Carrier gas was ultra-pure argon (Air Liquide) in both types of experiments

The aqueous solutions recovered in these experiments were sent to The University of Tennessee (UT) Stable Isotope Laboratory for analysis of the D/H ratio within the samples. These measurements were performed on a Los Gatos Research DLT-100 Liquid Water Isotope Analyzer, which has an experimental range of D/H 0.00008 to 0.00016. The UT Stable Isotope Laboratory routinely calibrates the analyzer with known standards. As a separate check, samples of water having natural abundance of ^{2}H were included along with samples collected from the experiments.

4.1 Demonstration of Chemical Conversion Process

Two experimental tests of the chemical conversion process were performed. Both tests utilized steel wool (super-fine, Rhodes American) in the first sorbent bed to release deuterium from DCl as D_2 (Equation 8), and the second sorbent bed contained copper oxide (Beantown Chemical CuO wire segments and Baker Analyzed® Reagent CuO wire) to convert the D_2 to D_2O as in Equation 6. The experimental system is shown in Figure 6.

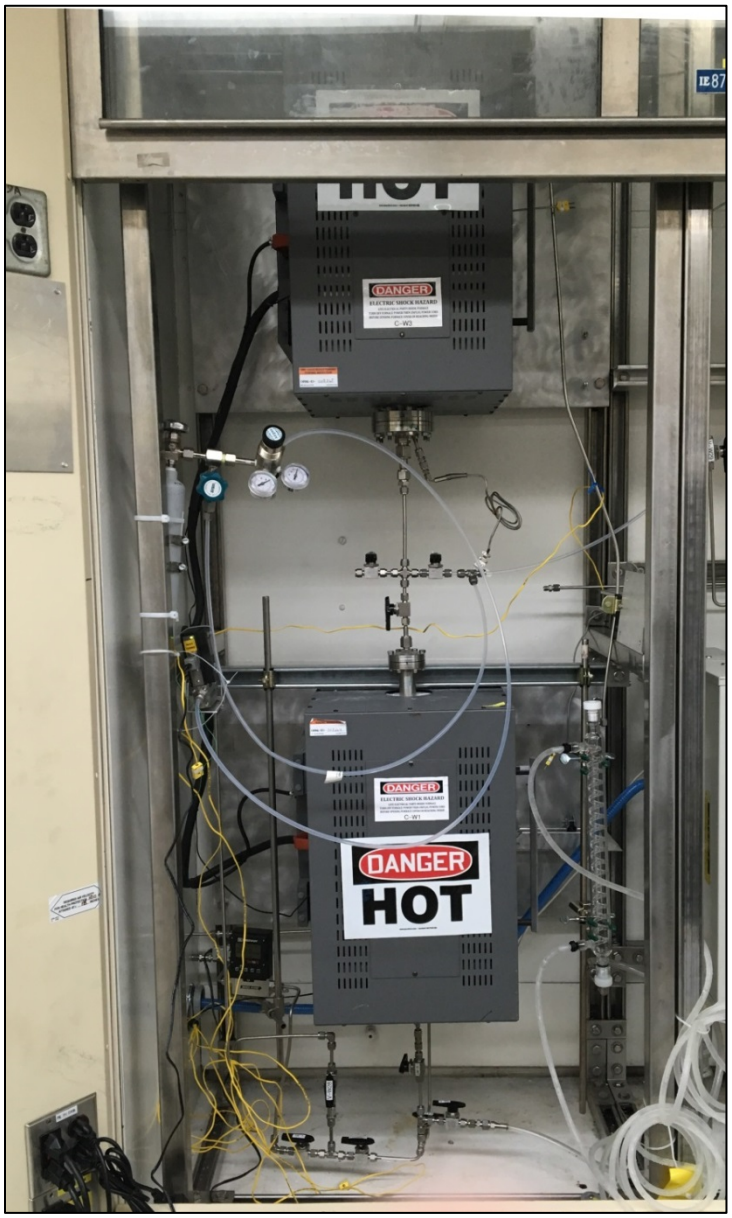

Figure 6. Experimental system for conversion approach to collecting deuterium as water.

Both tests held the iron wool bed (lower furnace) at 150 °C; the CuO bed (upper furnace) was held at 250 °C for the first test and at 275 °C for the second test. The first test ran for 4.0 h and the second for

~6.4 h. Upon the conclusion of each test, condensed liquid was observed within a cold finger contained in a dry ice/acetone bath (−78 °C). Assuming the chemical conversion was successful, this liquid will be D_2O. The entire trap was weighed empty prior to the test (tare) and after the test, while containing condensate, so the mass of condensate collected was easily determined. A few milliliters of distilled water, with naturally occurring levels of D/H, were used to rinse the inside of the cold finger and recover the small quantities of condensate; rinsing was completed after the trap warmed to room temperature. This resulted in some dilution of the sample, but dilution was nevertheless required to put the deuterium concentration into the range of the analytical instrument. Samples of this water were analyzed for D/H ratio.

The liquid recovered from the second test had a yellow tint to it, as shown in Figure 7. The cause of this was unknown, but it could be due to a number of factors such as incomplete conversion (condensation of DCl rather than D_2O), corrosion in the piping system, or impurities in the iron wool reagent. The pH of the condensate from the second test was equal to 1. This condensate was recovered by the same dilution method described in the first test, and a sample was analyzed for D/H ratio. A sample of the condensate also was sent for inductively coupled plasma mass spectrometry (ICP-MS) analysis to quantify any potential impurities, and these results are pending. After the conclusion of this run, corrosion was observed on some fittings of the DCl regulator, and the regulator was replaced prior to the experiments described in Section 4.2.

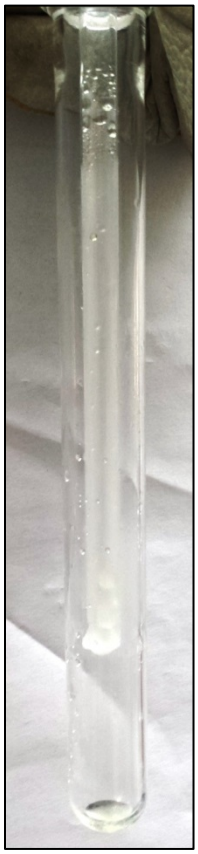

Figure 7. Condensate recovered from second chemical conversion test.

Table 6 summarizes the mass balance of deuterium, the amount of condensate collected, and the calculated and measured D/H ratios. The mass of condensate collected from test 1 and test 2, presumably D_2O, was 14% and 33% (respectively) of the amount expected from an ideal system. This would seem to indicate either poor conversion of DCl to D_2O or losses of D_2O from the cold trap. Based on the very low concentration of water vapor in the stream leaving the conversion furnaces, and the visual observation of the cold trap, it seems possible that some of the water escaped the cold finger as very fine snow. The measured D/H ratios were considerably smaller than those estimated based on quantitative recovery of the deuterium. Calculating the D/H ratios based on the actual mass of condensate collected resulted in D/H ratios 1.6 to 2.6 times greater than those measured by analysis. This could be caused if the rinse water did not contact all surfaces on which D_2O was located: Visually most of the inside surface of the cold trap was fogged with condensed sample, so incomplete contact with the rinse water is one explanation. A deuterium balance based on the quantity delivered as DCl and the deuterium analysis in the collected water indicates only 5% to 21% recovery.

Table 6. Analysis of condensate samples from conversion-cold trapping tests

Run #	**1**	**2**
Runtime (min)	240	387
Ar flowrate (sccm)	200.0	200.0
DCl flowrate (sccm)	4.0	4.0
DCl delivered (g)	1.489	2.401
D_2O equivalent delivered (g) [a]	0.796	1.283
Condensate recovered (g) [b]	0.113	0.425
Deuterium recovered (%) [c]	14	33
Rinse water added (g) [d]	6.703	6.834
D/H, calculated [e]	0.1070	0.1691
D/H, based on recovered mass [f]	0.01531	0.05610
D/H, instrumental analysis [g]	0.005862	0.035674
Deuterium recovered (%) [h]	5	21

[a] Based on complete conversion of DCl to metal chloride and water.

[b] Condensate collected in cold finger is assumed to be D_2O.

[c] As determined by mass.

[d] The amount of natural water used to flush the condensate from the cold finger.

[e] This is the ratio calculated to be in the mixed condensate and rinse if D_2O were quantitatively converted from DCl and quantitatively recovered.

[f] This is the ratio calculated assuming the actual mass of condensate recovered was D_2O.

[g] This is the ratio found in the mixed condensate and rinse by sample analysis.

[h] As determined by D/H analysis.

4.2 Demonstration of Liquid Scrubbing Process

Two tests of the liquid scrubbing process were completed. The gas supply system delivered gas directly to the scrubber shown in Figure 8. The simulated zirconium recycle off-gas stream passed through 0.1 *M* NaOH (Aqua Solutions, Inc.) for 4.1 h in the first test, and the gas stream passed through 1.0 *M* NaOH for 5.0 h in the second test. The liquid was recovered for analysis of the D/H ratio. Analysis of samples from the first test was completed. Analysis of samples from the second test is underway and will be reported in a subsequent document.

Figure 8. Caustic scrubber to capture DCl from the synthetic off-gas stream.

In the first scrubber test ~502 mL of 0.1 M NaOH solution was used to capture the DCl, converting it to NaCl and HDO. Gas flow rates were the same as in previous tests, specifically 200 sccm Ar and 4.0 sccm DCl. Assuming the DCl was quantitatively scrubbed from the gas stream, the calculated D/H ratio for the scrubber solution upon test conclusion would be 0.00163. Analysis of the sample gave a value of D/H = 0.0005864, indicating only 36% recovery of the deuterium. Possible explanations for the low recovery include losses due to insufficient residence time in the scrubber to allow transfer of DCl from the gas stream to the liquid, and losses of DCl to corrosion of the piping system (including the new gas regulator). The corrosion observed in the first regulator during the chemical conversion tests casts uncertainty in the mass of deuterium that was delivered to both experimental systems during testing, as any corrosion in the original or replacement regulator could significantly alter the feed stream.

In a third test of the caustic scrubbing system, the primary scrubber effluent was passed through a second scrubber. This approach will allow experimental determination of the scrubbing efficiency of the primary scrubber. 1.0 *M* NaOH was used as the scrubber solution for both scrubbers. After exposure of the scrubbers to the feed gas for 5 h, samples of the final solutions were taken for analysis of deuterium

content at the University of Tennessee and for chlorine content in ORNL laboratories. These results are pending.

5. DISCUSSION

Both methods to recover the deuterium from dilute streams of DCl were completed. Mass balances on the conversion cold-trapping system were poor and thought to be caused by losses of the water in the form of frozen aerosol from the cold trap or due to corrosion of the DCl regulator. There is also a potential loss of chlorine to stainless steel piping components, despite efforts to mitigate this through inert gas purges between each experimental test.

The amount of Zircaloy cladding that can be used in the upcoming hot cell demonstration determines the amount of ^{3}H that may be recovered. Although the conversion method collects the HDO or D_2O in concentrated form, which would be advantageous for collecting HTO for radiochemical analysis, the need to operate two furnaces and a very low temperature cold trap proved cumbersome. The approach using the caustic scrubber collected the HDO or D_2O in a very dilute form, but it was much easier to implement and operate. In addition, the scrubber required little in the way of controls (e.g., temperature controllers) and floor space. If the radiochemical analysis is sufficiently accurate to close the material balance on the HTO, then the caustic approach is preferred.

The analysis results pending from the third caustic scrubbing test will provide information not only relevant to the specific test conducted, but will also aid in interpretation of the results of the off-gas treatment that will be performed in the hot cell during the FY16-FY17 demonstration of the zirconium recycle process. By knowing the efficiency of the caustic scrubber and by obtaining measureable tritium in the scrubber solution upon conclusion of cladding chlorination, a reliable estimate of the amount of tritium present within the cladding used in the hot-cell demonstration can be determined.

5.1 A System to Support Hot-Cell Zirconium Processing Operations

Both systems tested using non-radioactive simulant streams are capable of collecting about 1/3 of the deuterium from an argon stream having a low concentration of DCl. Corrosion of the stainless steel piping systems could have consumed part of the DCl in both types of systems, leading to the low recovery. Thus, observed fractional recoveries do not distinguish between the approaches.

For hot-cell operations, a scrubber system was selected to implement recovery of tritium from the off-gas of the upcoming zirconium recovery experiment. This selection was strongly driven by the simple hardware required for implementation and because it requires minimal electrical services. The selected materials of construction include glass vessels, polymeric fittings and valves, and polymeric seals. The main vessel has a 50 mm inside diameter, and the glass dispersion frit will be submerges about 30 cm (12 in.) below the liquid surface; about twice as much as the system tested in the proof-of-principle experiments. A schematic of this system is shown in Fig. 9, with the assembled system shown in Fig. 10. This system will be cold tested with a Cl_2/Ar blend to ensure that there is no plug formation at the gas-liquid interface within the glass dispersion frit. If plugging becomes a concern, a larger mesh frit can be substituted. Additionally, if liquid condensate is expected between the caustic scrubber and the soda lime bed, a knockout pot will be installed between the two reactor bodies. The system is expected to be installed in the hot cell in early FY17.

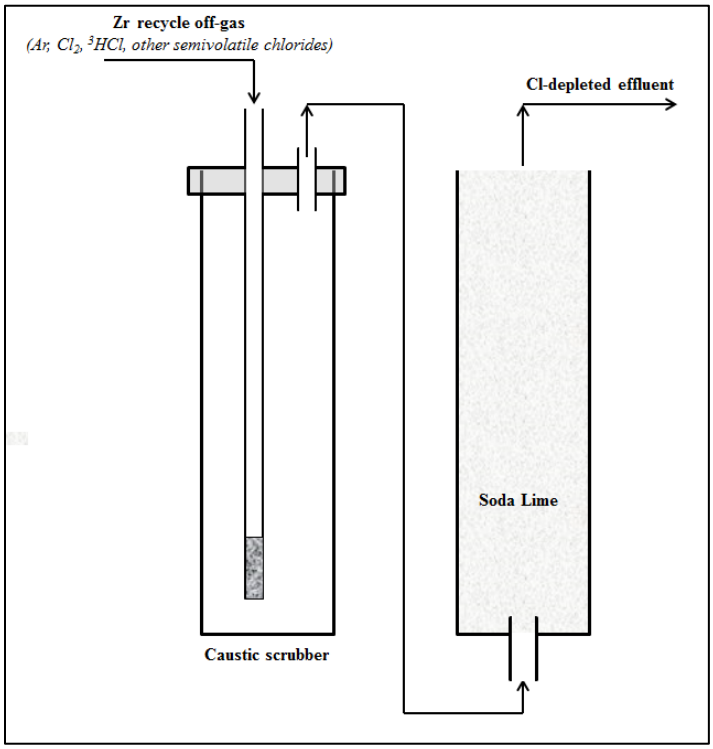

Figure 9: Schematic of off-gas treatment system for use in zirconium recycle hot-cell demonstration

Figure 10: Assembled scrubber system

6. REFERENCES

1. E. D. Collins, B. B. Spencer, G. D. DelCul, R. R. Brunson, J. A. Johnson, *Roadmap for Zirconium Recovery/Recycle Process Development*, ORNL/LTR-2012/609, also FCRD-SWF-2013-000074, UT-Battelle, LLC, Oak Ridge National Laboratory, December 2012.
2. S. M. Robinson, M. R. Chattin, J. M. Giaquinto, and R. T. Jubin, *Evaluation of Tritium Content and Release from Pressurized Water Reactor Fuel Cladding*, ORNL/SPR-2015/425, also FCRD-MRWFD-2015-000617, UT-Battelle, LLC, Oak Ridge National Laboratory, September 2015.
3. R. C. Weast, Ed., *CRC Handbook of Chemistry and Physics*, 70th ed., CRC Press, Inc., Boca Raton, Florida, 1989.
4. Croff, A. G. and C. W. Alexander. 1980. *Decay Characteristics of Once-Through LWR and LMFBR Spent Fuels, High-Level Wastes, and Fuel-Assembly Structural Material Wastes*. ORNL/TM-7431, Union Carbide Corp., Oak Ridge National Laboratory, November (Applied Technology).
5. Cochran, R. G. and N. Tsoulfanidis. 1999. *The Nuclear Fuel Cycle: Analysis and Management*, 2nd ed. American Nuclear Society, La Grange Park, Ill.
6. J. C. Gehin and R. T. Primm, III. 1997. *Light Water Reactor Mixed Oxide Benchmark I*, American Nuclear Society, La Grange Park, Ill.
7. J. Eng and S. H. J. Greenwood, "Chlorine Separation Process," US Patent 3,001,607, Sept. 26, 1961.
8. Physical properties from http://webbook.nist.gov, accessed October 20, 2015.
9. P. Schmittinger, *Chlorine: Principles and Industrial Practice*, 1st ed., Wiley-VCH, Weinheim, Federal Republic of Germany, 2000.
10. Kirk-Othmer Encyclopedia of Chemical Technology, John Wiley & Sons, Inc., published on-line 4 December 2000.
11. A. H. Hardin and N. Sheppard, "Infrared spectra of HCl adsorbed on high-area alkali-metal halides: Dependence of the effective surface ionicities on the ionic radius ratio, *J. Chem. Soc., Dalton Trans.*, pp. 1289–1292, 1999.
12. EMD Millipore, "Molecular Sieves: Drying Application by Type," https://www.emdmillipore.com, October 22, 2015.
13. Semco Inc., "Importance of the 3A Molecular Sieve Desiccant Coated Total Energy Recovery Wheel to the HVAC Indoor Air Quality (IAQ) Market," Rev. 3, www.semcoinc.com, October 20, 2015.
14. Molecular Products Ltd., "An Overview of Large and Small Scale Adsorption and Catalytic Gas Processing," version 2, 5/08/09.
15. W. G. Berl, Ed., *Physical Methods in Chemical Analysis: Vol. IV*, Academic Press, New York, 1961.