NEA/NSC/DOC(95)03/VIII
Volume VIII

ALARM-TRAN-PB-SHIELD-001

ORNL/TM-2016/316

Neutron Activation Foil and Thermoluminescent Dosimeter Responses to a Lead Reflected Pulse of the CEA Valduc SILENE Critical Assembly

Approved for public release.
Distribution is unlimited.

Thomas M. Miller
Cihangir Celik
Kimberly L. McMahan
Yi-Kang Lee
Emmanuel Gagnier
Nicolas Authier
Jérome Piot
Xavier Jacquet
Guillaume Rousseau
Kevin H. Reynolds

September 2016

OAK RIDGE NATIONAL LABORATORY
MANAGED BY UT-BATTELLE FOR THE US DEPARTMENT OF ENERGY

NEA/NSC/DOC(95)03/VIII
Volume VIII

ALARM-TRAN-PB-SHIELD-001

DOCUMENT AVAILABILITY

Reports produced after January 1, 1996, are generally available free via US Department of Energy (DOE) SciTech Connect.

Website http://www.osti.gov/scitech/

Reports produced before January 1, 1996, may be purchased by members of the public from the following source:

National Technical Information Service
5285 Port Royal Road
Springfield, VA 22161
Telephone 703-605-6000 (1-800-553-6847)
TDD 703-487-4639
Fax 703-605-6900
E-mail info@ntis.gov
Website http://www.ntis.gov/help/ordermethods.aspx

Reports are available to DOE employees, DOE contractors, Energy Technology Data Exchange representatives, and International Nuclear Information System representatives from the following source:

Office of Scientific and Technical Information
PO Box 62
Oak Ridge, TN 37831
Telephone 865-576-8401
Fax 865-576-5728
E-mail reports@osti.gov
Website http://www.osti.gov/contact.html

This report was prepared as an account of work sponsored by an agency of the United States Government. Neither the United States Government nor any agency thereof, nor any of their employees, makes any warranty, express or implied, or assumes any legal liability or responsibility for the accuracy, completeness, or usefulness of any information, apparatus, product, or process disclosed, or represents that its use would not infringe privately owned rights. Reference herein to any specific commercial product, process, or service by trade name, trademark, manufacturer, or otherwise, does not necessarily constitute or imply its endorsement, recommendation, or favoring by the United States Government or any agency thereof. The views and opinions of authors expressed herein do not necessarily state or reflect those of the United States Government or any agency thereof.

ALARM-TRAN-PB-SHIELD-001

CONTENTS

LIST OF FIGURES vii
LIST OF TABLES xi
1.0 DETAILED DESCRIPTION 1
1.1 Overview of Experiment 1
1.2 Description of Experimental Configuration 2
1.2.1 SILENE Room 4
1.2.2 Collimator Boxes 8
1.2.3 Collimator B Shielding 22
1.2.4 Foil Holders 25
1.2.5 Free Field Location 27
1.2.6 Scattering Box 31
1.2.7 Scattering Box Detector Mounting Plate 39
1.2.8 SILENE Diagnostics 41
1.3 Description of Material Data 43
1.3.1 SILENE Room 43
1.3.2 Collimator Boxes 44
1.3.3 Collimator B Shielding 45
1.3.4 Foil Holders 45
1.3.5 Free Field Location 46
1.3.6 Scattering Box 46
1.3.7 Scattering Box Detector Mounting Plate 47
1.3.8 SILENE Diagnostics 47
1.4 Description of the Source 47
1.4.1 SILENE Dimensions 47
1.4.2 Lead Reflector Dimensions 49
1.4.3 SILENE and Lead Reflector Materials 51
1.4.4 Uranyl Nitrate Solution 53
1.5 Description of the Detectors 54
1.5.1 Neutron Activation Foil Dimensions 54
1.5.2 Neutron Activation Foil Materials 55
1.5.3 TLD Dimensions 57
1.5.4 TLD Materials 58
1.5.5 Detector Locations and Configurations 58

1.6 Measurement Techniques 69
1.7 Measurement Results 71
2.0 EVALUATION OF EXPERIMENTAL DATA 76
2.1 Comparison and Initial Evaluation of the Experimentally Measured Data 76
2.1.1 Analysis of the Experiment 2 Measured Data 79
2.1.2 Analysis of the Experiment 2 Measured Data Uncertainties 79
2.2 Missing and Contradictory Data and Resolution of These Data 80
2.2.1 SILENE Room 80
2.2.2 Collimator Boxes 80
2.2.3 Free Field Location 80
2.2.4 Scattering Box Detector Mounting Plate 81
2.2.5 SILENE Diagnostics 81
2.2.6 Neutron Activation Foil 81
2.2.7 Concrete Data 81
2.2.8 Plastic Bags in the Scattering Box 82
2.3 Uncertainty of the SILENE Fission Source 83
2.3.1 Propagation of Fixed Source Uncertainties 83
2.3.2 Uranyl Nitrate Solution Isotopic Uncertainties 85
2.4 Experimental and Benchmark Model Parameter Uncertainties 85
2.4.1 Geometric Dimension Uncertainties 85
2.4.2 Material Density Uncertainties 85
2.4.3 Material Elemental Composition Uncertainties 86
2.4.4 Shielding Blocks Composition Uncertainties 86
2.4.5 Shielding Blocks Orientation Uncertainties 87
2.4.6 PPB9 Uncertainties 87
2.4.7 Uranyl Nitrate Solution Uncertainties 87
2.4.8 Neutron Activation Foils Uncertainties 88
2.5 Evaluation of the Experimental Data Uncertainties 88
2.5.1 Uncertainty Dependencies 89
2.5.2 Case 1 Collimator A Uncertainties 91
2.5.3 Case 2 Collimator B Uncertainties 92
2.5.4 Case 3 Free Field Location Uncertainties 93
2.5.5 Case 4 Scattering Box Position 1 Uncertainties 93
2.5.6 Case 5 scattering Box Position 2 Uncertainties 94
2.5.7 Case 6 scattering Box Position 3 Uncertainties 95

2.5.8 Case 7 Scattering Box Position 4 Uncertainties 95
3.0 BENCHMARK SPECIFICATIONS 97
3.1 Description of Model 97
3.1.1 Simplification: SILENE Room Details 98
3.1.2 Unquantifiable Simplifications 98
3.1.3 All Other Simplifications 99
3.2 Dimensions 99
3.2.1 SILENE Room 99
3.2.2 Collimator Boxes 103
3.2.3 Collimator B Shielding 108
3.2.4 Simplified Foil Holder Model 108
3.2.5 Free Field Location 110
3.2.6 Scattering Box 110
3.2.7 Scattering Box Detector Mounting Plate 115
3.2.8 SILENE Critical Assembly 116
3.2.9 Lead Reflector 116
3.2.10 Neutron Activation Foils 117
3.2.11 TLD 127
3.3 Material Data 128
3.3.1 SILENE Room 128
3.3.2 Collimator Boxes 129
3.3.3 Collimator B Shielding 129
3.3.4 Simplified Foil Holder 130
3.3.5 Free Field Location 130
3.3.6 Scattering Box 130
3.3.7 Scattering Box Detector Mounting Plate 130
3.3.8 SILENE Critical Assembly 131
3.3.9 Lead Reflector 131
3.3.10 Neutron Activation Foils 132
3.3.11 TLD 133
3.4 Source Strength and Spectra 133
3.4.1 Response Functions and Normalization 134
3.5 Experimental and Benchmark Model Neutron and Photon Data 135
4.0 RESULTS OF SAMPLE CALCULATIONS 138
4.1 Source Strength and Spectra 138

4.2 Response Functions and Normalization 142
4.2.1 Neutron Activation Foil Response Functions and Normalization 142
4.2.2 Photon TLD Dose Response Functions and Normalization 152
4.3 Prompt Response Simulation Results 153
4.4 Delayed Photon Response Simulation Results 161
5.0 REFERENCES 162
APPENDIX A: TYPICAL INPUT LISTINGS 163
APPENDIX B: ADVANTG INPUT LISTINGS 166
APPENDIX C: SOURCE DISTRIBUTIONS 167
APPENDIX D: TLD PHOTON DOSE RESPONSE FUNCTION 205
APPENDIX E: GRAPHICAL COMPARISON BETWEEN CALCULATION AND EXPERIMENT 206
APPENDIX F: LEAKAGE RESULTS FROM SIMULATION 214
APPENDIX G: DISCUSSION OF CAAS DETECTOR PERFORMANCE 228
APPENDIX H: ADDITIONAL DOCUMENTATION OF EXPERIMENTAL DETAILS 245
APPENDIX I: UNCERTAINTY ANALYSIS DETAILS 256

LIST OF FIGURES

Figure **Page**

Figure 1-1. Experimental setup without reflector. 3
Figure 1-2. Overview of experiment configuration with dimensions. 3
Figure 1-3. SILENE critical assembly room (dimensions in meters). 4
Figure 1-4. Details of crane supports in SILENE room (dimensions in meters). 5
Figure 1-5. SILENE room doors. 5
Figure 1-6. SILENE room shielding doors; view from hallway outside the room (dimensions in mm). 6
Figure 1-7. SILENE room shielding doors; view from the side (dimensions in mm). 7
Figure 1-8. Location of axis of SILENE in room (dimensions in meters). 8
Figure 1-9. Collimators A and B on their stands (without concrete shielding). 8
Figure 1-10. Isometric view of collimator and stand. 9
Figure 1-11. Front view of collimator and stand. 10
Figure 1-12. Side view of collimator and stand. 11
Figure 1-13. Detail of collimator guide on stand. 12
Figure 1-14. Cross section of collimator layers, front view. 13
Figure 1-15. Cross section of collimator layers, side view. 14
Figure 1-16. Isometric view of collimator inner stainless steel frame (thickness 5 mm). 15
Figure 1-17. Isometric view of collimator outer stainless steel layer (thickness 2 mm). 16
Figure 1-18. Detail of collimator activation foil holder support bar. 17
Figure 1-19. Detail of Small support stand inside collimator. 17
Figure 1-20. Location of collimator A stand within the SILENE room. 19
Figure 1-21. Location of collimator B stand within the SILENE room. 20
Figure 1-22. Height of collimator A above SILENE room floor. 21
Figure 1-23. Height of collimator B above SILENE room floor. 22
Figure 1-24. Collimator B, standard concrete shield block, and 1 cm Gap 23
Figure 1-25. Concrete Shield Block. 23
Figure 1-26. Dimensions of concrete shield blocks (all dimensions are cm). 24
Figure 1-27. Dimensions of concrete shield block lift points. 24
Figure 1-28. Collimator foil holder with neutron activation foils. 25
Figure 1-29. Front of Foil holder without front plate. 26
Figure 1-30. Back and side of foil holder. 26
Figure 1-31. Front of foil holder with front plate. 27
Figure 1-32. Free field location stand. 28
Figure 1-33. Front view of free field stand. 29
Figure 1-34. Isometric view of free field stand. 30
Figure 1-35. Detail of free field stand support bar. 31
Figure 1-36. Front of scattering box (side nearest SILENE). 32
Figure 1-37. Back of scattering box. 32
Figure 1-38. Elevation view of the scattering box from the front (dimensions in mm). 33
Figure 1-39. Elevation view of the scattering box from the side nearest the free field location (dimensions in mm). 34
Figure 1-40. Plan view of scattering box (dimensions in mm). 35
Figure 1-41. details of vertical support bars (dimensions in mm). 35
Figure 1-42. Location of scattering box and stand within SILENE room. 36
Figure 1-43. Height of scattering box above SILENE room floor. 37

Figure 1-44. Gap between scattering box concrete blocks. 37
Figure 1-45. Front of the scattering box with block names; gap dimensions in cm. 38
Figure 1-46. Back of scattering box with Block names; gap dimensions in cm. 38
Figure 1-47. Drawing of side of scattering box with block names; gap dimensions in cm. 39
Figure 1-48. Scattering box aluminum mounting plate. 39
Figure 1-49. Details of scattering box aluminum mounting plates. 40
Figure 1-50. Plates mounted in the scattering box. 40
Figure 1-51. Detector diagnostics and stands. 41
Figure 1-52. Dimensions in cm of detector diagnostics and stands. 42
Figure 1-53. Location of detector diagnostics and stands within SILENE room. 42
Figure 1-54. SILENE without the lead reflector. 47
Figure 1-55. Simplified SILENE geometry. 48
Figure 1-56. SILENE lower lead ring. 49
Figure 1-57. SILENE lead reflector/shield. 49
Figure 1-58. SILENE Lead reflector dimensions in mm. 50
Figure 1-59. SILENE lead reflector and lower lead ring positions above the floor in mm. 51
Figure 1-60. Valduc Al_2O_3 TLD container. 58
Figure 1-61. Collimator A detector configuration. 60
Figure 1-62. Detector locations within collimator A. 60
Figure 1-63. Collimator B detector configuration. 61
Figure 1-64. Detector locations within collimator B. 61
Figure 1-65. Free field detector configuration. 62
Figure 1-66. Detector locations on the free field stand. 62
Figure 1-67. Detail of the free field neutron activation foil holder. 63
Figure 1-68. Scattering box position 1 dimensions. 64
Figure 1-69. Scattering box position 2 dimensions. 64
Figure 1-70. Scattering box position 3 dimensions. 65
Figure 1-71. Scattering box position 4 dimensions. 65
Figure 1-72. Detectors at scattering box position 1. 66
Figure 1-73. Location of detectors on scattering box position 1 mounting plate. 66
Figure 1-74. Detectors at scattering box position 2. 67
Figure 1-75. Location of detectors on scattering box position 2 mounting plate. 67
Figure 1-76. Detectors at scattering box positions 3 and 4. 68
Figure 1-77. Location of detectors on scattering box positions 3 and 4 mounting plate. 68
Figure 1-78. Fission rate as a function of time. 72

Figure 3-1. Benchmark model overview. 97
Figure 3-2. XY view of the SILENE room. 100
Figure 3-3. XZ view of the SILENE room. 100
Figure 3-4. YZ view of the SILENE room. 101
Figure 3-5. XY view of the SILENE room doors and hall. 102
Figure 3-6. XZ View of the SILENE room doors and hall. 102
Figure 3-7. SILENE location in benchmark model. 103
Figure 3-8. Overall collimator model with internal cavity. 104
Figure 3-9. Internal material layers of collimator model (blue is air). 104
Figure 3-10. Collimator stainless steel frame. 105
Figure 3-11. External stainless steel layer attached to the stainless steel frame. 105
Figure 3-12. XZ view of the collimator stand. 106
Figure 3-13. YZ View of the collimator stand (left looking towards SILENE [-x]; 106

Figure 3-14. XY View of the collimator stand. 107
Figure 3-15. Location of the collimator stands, collimators, and collimator B shielding. 107
Figure 3-16. Concrete shield block model. 108
Figure 3-17. XZ view of the foil holder model. 109
Figure 3-18. YZ view of the foil holder model. 109
Figure 3-19. XY view of the foil holder model. 110
Figure 3-20. Scattering box benchmark model overview. 111
Figure 3-21. XZ view of the scattering box support stand. 112
Figure 3-22. YZ view of the scattering box support stand. 112
Figure 3-23. XY view of the scattering box support stand. 113
Figure 3-24. Location of the scattering box on the support stand and the support stand within the SILENE room. 114
Figure 3-25. Dimensions of the scattering box mounting plates. 115
Figure 3-26. Configuration of the scattering box mount. 115
Figure 3-27. SILENE assembly benchmark model dimensions. 116
Figure 3-28. Lead reflector benchmark model dimensions. 117
Figure 3-29. Example of a benchmark model neutron activation foil. 117
Figure 3-30. YZ view of neutron activation foils within the foil holders. 119
Figure 3-31. XZ view of the neutron activation foils within the foil holders. 120
Figure 3-32. Elevation view of the foil holder within the collimators. 121
Figure 3-33. Plan view of the foil holder within the collimators. 121
Figure 3-34. elevation view of the foil holder at the free field location. 122
Figure 3-35. Plan view of the foil holder at the free field location. 122
Figure 3-36. Sketch to help locate the free field location (not to scale). 123
Figure 3-37. Scattering box position 1 (SB1) detector configuration. 124
Figure 3-38. Scattering box position 2 (SB2) detector configuration. 125
Figure 3-39. Scattering box position 3 (SB3) detector configuration. 126
Figure 3-40. Scattering box position 4 (SB4) detector configuration. 127
Figure 3-41. Al_2O_3 TLD benchmark model. 127

Figure 4-1. SILENE pulse 2 energy distribution of fission neutrons calculated with MCNP6 using ENDF/B-VII.1 cross section data (.80c). 139
Figure 4-2. SILENE Pulse 2 axial distribution of fission neutrons calculated with MCNP6 using ENDF/B-VII.1 cross section data (.80c). 140
Figure 4-3. Select SILENE pulse 2 Radial distributions of fission neutrons calculated with MCNP6 using ENDF/B-VII.1 cross section data (.80c). 141
Figure 4-4. ^{59}Co (n,γ) Cross section from MCNP ENDF/B-VII.1 (.80c). 142
Figure 4-5. ^{197}Au (n,γ) Cross section from MCNP ENDF/B-VII.1 (.80c). 143
Figure 4-6. ^{115}In (n,γ) cross section from IRDF-2002 (.34y). 144
Figure 4-7. ^{55}Mn (n,γ) cross section from MCNP ENDF/B-VII.1 (.80c). 145
Figure 4-8. ^{54}Fe (n,p) cross section from MCNP ENDF/B-VII.1 (.80c). 146
Figure 4-9. ^{56}Fe (n,p) cross section from MCNP ENDF/B-VII.1 (.80c). 147
Figure 4-10. ^{24}Mg (n,p) cross section from MCNP ENDF/B-VII.1 (.80c). 148
Figure 4-11. ^{58}Ni (n,p) cross section from MCNP ENDF/B-VII.1 (.80c). 149
Figure 4-12. ^{115}In (n,n'γ) cross section from IRDF-2002 (.34y). 150
Figure 4-13. ICRU-57 air kerma response function taken from SCALE 6.2, but using modified upper and lower energy boundaries. 152

ALARM-TRAN-PB-SHIELD-001

Figure E-1. Case 1 collimator A neutron activation foil code-to-code comparison of C/E ratios with 2-sigma error bars. 206
Figure E-2. Case 2 collimator B neutron activation foil code-to-code comparison of C/E ratios with 2-sigma error bars. 207
Figure E-3. Case 3 free field location neutron activation foil code-to-code comparison of C/E ratios with 2-sigma error bars. 208
Figure E-4. Case 4 scattering box position 1 neutron activation foil code-to-code comparison of C/E ratios with 2-sigma error bars. 209
Figure E-5. Case 5 scattering box position 2 neutron activation foil code-to-code comparison of C/E ratios with 2-sigma error bars. 210
Figure E-6. case 6 scattering box position 3 neutron activation foil code-to-code comparison of C/E ratios with 2-sigma error bars. 211
Figure E-7. Case 7 scattering box position 4 neutron activation foil code-to-code comparison of C/E ratios with 2-sigma error bars. 212
Figure E-8. All Al_2O_3 TLD code-to-code comparison of C/E ratios with 2-sigma error bars (all cases). 213

Figure F-1. Neutron leakage from radial surface of lead shield calculated with MCNP6 using ENDF/B-VII.1 cross section data (.80c). 214
Figure F-2. Photon leakage from radial surface of lead shield calculated with MCNP6 using ENDF/B-VII.1 cross section data (.80c). 215

Fig. I-1. Cobalt Activity vs. SILENE Reactor Steel Density (2-sigma error bars). 257
Fig. I-2. Cobalt Activity vs. Cr Weight Fraction of SILENE Reactor Steel (2-sigma error bars). 258

LIST OF TABLES

Table **Page**

Table 1-1. SILENE concrete composition 43
Table 1-2. Standard composition of S235JR steel 44
Table 1-3. Composition of Z2 CN 18-10 stainless steel for the collimator boxes 44
Table 1-4. PPB9 Composition after drying 45
Table 1-5. Standard concrete composition according to LERM analysis and density according to the manufacturer Soutrenon 45
Table 1-6. Standard composition of AG3M aluminum 46
Table 1-7. Magnetite concrete composition according to LERM analysis and density according to the manufacturer Soutrenon 46
Table 1-8. Standard composition of Z2 CN 18-10 stainless steel 52
Table 1-9. Standard composition of A42 steel 52
Table 1-10. Analysis of Valduc high purity lead 53
Table 1-11. Composition of XC18 steel 53
Table 1-12. Isotopic composition of uranyl nitrate solution in 1999 54
Table 1-13. Results of the September 8, 2010 uranyl nitrate solution analysis 54
Table 1-14. Dimensions and masses of neutron activation foils 55
Table 1-15. Results of Goodfellow [1] chemical analysis 56
Table 1-16. Results of Goodfellow [2] chemical analysis 56
Table 1-17. Results of Goodfellow [3] chemical analysis 56
Table 1-18. Results of FILAB [1] chemical analysis 56
Table 1-19. Results of FILAB [2] chemical analysis 56
Table 1-20. Results of FILAB [3] chemical analysis 56
Table 1-21. Results of FILAB [4] chemical analysis 56
Table 1-22. Results of FILAB [5] chemical analysis 57
Table 1-23. Results of FILAB [6] chemical analysis 57
Table 1-24. Results of Welience [1] chemical analysis 57
Table 1-25. Standard composition of AU4G aluminum alloy 58
Table 1-26. Neutron activation foils and measured activation products[(a)] 70
Table 1-27. Neutron activation foils measurement results 74
Table 1-28. TLD dose measurement results 75

Table 2-1. Comparison of $^{197}Au(n,\gamma)^{198}Au$ reaction data 77
Table 2-2. Comparison of $^{59}Co(n,\gamma)^{60}Co$ reaction data 77
Table 2-3. Comparison of $^{115}In(n,\gamma)^{116}In$ reaction data 77
Table 2-4. Comparison of $^{56}Fe(n,p)^{56}Mn$ + $^{55}Mn(n,\gamma)^{56}Mn$ reaction data 77
Table 2-5. Comparison of $^{58}Ni(n,p)^{58}Co$ reaction data 78
Table 2-6. Comparison of $^{115}In(n,n'\gamma)^{115m}In$ reaction data 78
Table 2-7. Comparison of $^{54}Fe(n,p)^{54}Mn$ reaction data 78
Table 2-8. Comparison of $^{24}Mg(n,p)^{24}Na$ reaction data 78
Table 2-9. Comparison of Al_2O_3 doses 78
Table 2-10. Comparison of HBG doses 78
Table 2-11. Comparison of DXT doses 79
Table 2-12. SILENE room air composition 80
Table 2-13. Sensitivity / Uncertainty dependency table 90

Table 2-14. Case 1 collimator A detector total experimental uncertainties 92
Table 2-15. Case 2 collimator B detector total experimental uncertainties 93
Table 2-16. Case 3 free field location detector total experimental uncertainties 93
Table 2-17. Case 4 scattering box position 1 detector total experimental uncertainties 94
Table 2-18. Case 5 scattering box position 2 detector total experimental uncertainties 95
Table 2-19. Case 6 scattering box position 3 detector total experimental uncertainties 95
Table 2-20. Case 7 scattering box position 4 detector total experimental uncertainties 96

Table 3-1. Scattering box benchmark model gaps 111
Table 3-2. Thickness of each benchmark model neutron activation foil 118
Table 3-3. SILENE concrete benchmark model number densities 128
Table 3-4. SILENE air benchmark model number densities 128
Table 3-5. Steel S235JR (low carbon steel) benchmark model number densities 129
Table 3-6. Collimator box Z2 CN 18-10 stainless steel benchmark model number densities 129
Table 3-7. Collimator box copper benchmark model number densities 129
Table 3-8. Collimator box lead benchmark model number densities 129
Table 3-9. Collimator box PPB9 benchmark model number densities 129
Table 3-10. Standard concrete benchmark model number densities 130
Table 3-11. AG3M aluminum alloy benchmark model number densities 130
Table 3-12. Magnetite concrete benchmark model number densities 130
Table 3-13. Aluminum benchmark model number densities 130
Table 3-14. Standard composition Z2 CN 18-10 benchmark model number densities 131
Table 3-15. Natural cadmium benchmark model number densities 131
Table 3-16. A42 steel benchmark model number densities 131
Table 3-17. Uranyl nitrate benchmark model number densities 131
Table 3-18. Lead reflector benchmark model number densities 132
Table 3-19. Composition of XC18 Steel benchmark model number densities 132
Table 3-20. Collimator A neutron activation foil benchmark model number densities 132
Table 3-21. Collimator B neutron activation foil benchmark model number densities 132
Table 3-22. Free field neutron activation foil benchmark model number densities 132
Table 3-23. Scattering box 1 neutron activation foil benchmark model number densities 133
Table 3-24. Scattering box 2 neutron activation foil benchmark model number densities 133
Table 3-25. Scattering box 3 neutron activation foil benchmark model number densities 133
Table 3-26. Scattering box 4 neutron activation foil benchmark model number densities 133
Table 3-27. AU4G aluminum alloy benchmark model number densities 133
Table 3-28. Al_2O_3 TLD powder benchmark model number densities 133
Table 3-29. Benchmark neutron activation foil data 136
Table 3-30. Benchmark TLD dose data 137

Table 4-1. Case 1 collimator A complete tally normalization for neutron activation products 151
Table 4-2. Case 2 collimator B complete tally normalization for neutron activation products 151
Table 4-3. Case 3 free field complete tally normalization for neutron activation products 151
Table 4-4. Case 4 scattering box 1 complete tally normalization for neutron activation products 151
Table 4-5. Case 5 scattering box 2 complete tally normalization for neutron activation products 151
Table 4-6. Case 6 scattering box 3 complete tally normalization for neutron activation products 151
Table 4-7. Case 7 scattering box 4 complete tally 151
Table 4-8. Sample neutron activation calculation results with MCNP6 ENDF/B-VII.1 (US) 154
Table 4-9. Sample TLD dose calculation results with MCNP6 ENDF/B-VII.1 (US) 155
Table 4-10. Sample neutron activation calculation results with SCALE 6.2 ENDF/B-VII.1 (US) 156

Table 4-11. Sample TLD dose calculation results with SCALE 6.2 ENDF/B-VII.1 (US) 157
Table 4-12. Sample neutron activation calculation results with TRIPOLI-4 JEFF-3.1.1 (CEA-V.5.1.1, France) 158
Table 4-13. Sample TLD dose calculation results with TRIPOLI-4 JEFF-3.1.1 (CEA-V.5.1.1, France) 159
Table 4-14. Sample neutron activation calculation results with COG 11.1 ENDF/B-VII.1 (US) 160
Table 4-15. Sample TLD dose calculation results with COG 11.1 ENDF/B-VII.1 (US) 161

Table A-1. Links to MCNP6 input and weight window files 164
Table A-2. Links to SCALE 6.2 input and weight window files 165

Table B-1. Links to ADVANTG and MCNP5 input files 166

Table C-1. Energy distribution of fission neutrons (cont) 167
Table C-2. Axial distribution of fission neutrons. 173
Table C-3. Radial distributions of fission neutrons (cont) 174

Table D-1. Benchmark model representation of the ICRU-57 Air kerma flux-to-dose conversion factors .. 205

Table F-1. Neutron leakage from radial surface of lead shield and relative errors (cont) 215
Table F-2. Photon leakage from radial surface of lead shield and relative errors (cont) 222

Table I-1. Results of Steel Density Perturbation Simulations 257
Table I-2. Results of Steel Cr Weight Fraction Perturbation Simulations 258
Table I-3. Case 1 collimator A $^{59}Co(n,\gamma)^{60}Co$ experimental uncertainties 259
Table I-4. Case 1 collimator A $^{197}Au(n,\gamma)^{198}Au$ experimental uncertainties 260
Table I-5. Case 1 collimator A $^{115}In(n,\gamma)^{116}In$ experimental uncertainties 261
Table I-6. Case 1 collimator A $^{115}In(n,n'\gamma)^{115m}In$ experimental uncertainties 262
Table I-7. Case 1 collimator A $^{56}Fe(n,p)^{56}Mn$ + $^{55}Mn(n,\gamma)^{56}Mn$ experimental uncertainties 263
Table I-8. Case 1 collimator A $^{24}Mg(n,p)^{24}Na$ experimental uncertainties 264
Table I-9. Case 1 collimator A $^{58}Ni(n,p)^{58}Co$ experimental uncertainties 265
Table I-10. Case 1 collimator A Al_2O_3 TLD experimental uncertainties 266
Table I-11. Case 2 collimator B $^{59}Co(n,\gamma)^{60}Co$ experimental uncertainties 267
Table I-12. Case 2 collimator B $^{197}Au(n,\gamma)^{198}Au$ experimental uncertainties 268
Table I-13. Case 2 collimator B $^{115}In(n,\gamma)^{116}In$ experimental uncertainties 269
Table I-14. Case 2 collimator B $^{115}In(n,n'\gamma)^{115m}In$ experimental uncertainties 270
Table I- 15. Case 2 collimator B $^{56}Fe(n,p)^{56}Mn$ + $^{55}Mn(n,\gamma)^{56}Mn$ experimental uncertainties 271
Table I-16. Case 2 collimator B $^{24}Mg(n,p)^{24}Na$ experimental uncertainties 272
Table I-17. Case 2 collimator B $^{58}Ni(n,p)^{58}Co$ experimental uncertainties 273
Table I-18. Case 2 collimator B Al_2O_3 TLD experimental uncertainties 274
Table I-19. Case 3 free field $^{59}Co(n,\gamma)^{60}Co$ experimental uncertainties 275
Table I-20. Case 3 free field $^{197}Au(n,\gamma)^{198}Au$ experimental uncertainties 276
Table I-21. Case 3 free field $^{115}In(n,\gamma)^{116}In$ experimental uncertainties 277
Table I-22. Case 3 free field $^{115}In(n,n'\gamma)^{115m}In$ experimental uncertainties 278
Table I-23. Case 3 free field $^{56}Fe(n,p)^{56}Mn$ + $^{55}Mn(n,\gamma)^{56}Mn$ experimental uncertainties 279
Table I-24. Case 3 free field $^{24}Mg(n,p)^{24}Na$ experimental uncertainties 280
Table I-25. Case 3 free field $^{58}Ni(n,p)^{58}Co$ experimental uncertainties 281
Table I-26. Case 3 free field Al_2O_3 TLD experimental uncertainties 282
Table I-27. Case 4 scattering box 1 $^{59}Co(n,\gamma)^{60}Co$ experimental uncertainties 283
Table I-28. Case 4 scattering box 1 $^{197}Au(n,\gamma)^{198}Au$ experimental uncertainties 284

ALARM-TRAN-PB-SHIELD-001

Table I-29. Case 4 scattering box 1 $^{115}In(n,\gamma)^{116}In$ experimental uncertainties 285
Table I-30. Case 4 scattering box 1 $^{115}In(n,n'\gamma)^{115m}In$ experimental uncertainties 286
Table I-31. Case 4 scattering box 1 $^{56}Fe(n,p)^{56}Mn$ + $^{55}Mn(n,\gamma)^{56}Mn$ experimental uncertainties 287
Table I-32. Case 4 scattering box 1 $^{24}Mg(n,p)^{24}Na$ experimental uncertainties 288
Table I-33. Case 4 scattering box 1 $^{58}Ni(n,p)^{58}Co$ experimental uncertainties 289
Table I-34. Case 5 scattering box 2 $^{59}Co(n,\gamma)^{60}Co$ experimental uncertainties 290
Table I-35. Case 5 scattering box 2 $^{197}Au(n,\gamma)^{198}Au$ experimental uncertainties 291
Table I-36. Case 5 scattering box 2 $^{58}Ni(n,p)^{58}Co$ experimental uncertainties 292
Table I-37. Case 6 scattering box 3 $^{59}Co(n,\gamma)^{60}co$ experimental uncertainties 293
Table I-38. Case 6 scattering box 3 $^{197}Au(n,\gamma)^{198}Au$ experimental uncertainties 294
Table I-39. Case 6 scattering box 3 $^{58}Ni(n,p)^{58}Co$ experimental uncertainties 295
Table I-40. Case 6 scattering box 3 Al_2O_3 TLD experimental uncertainties 296
Table I-41. Case 7 scattering box 4 $^{59}Co(n,\gamma)^{60}Co$ experimental uncertainties 297
Table I-42. Case 7 scattering box 4 $^{197}Au(n,\gamma)^{198}Au$ experimental uncertainties 298
Table I-43. Case 7 scattering box 4 $^{58}Ni(n,p)^{58}Co$ experimental uncertainties 299

NEA/NSC/DOC(95)03/VIII
Volume VIII

ALARM-TRAN-PB-SHIELD-001

NEUTRON ACTIVATION FOIL AND THERMOLUMINESCENT DOSIMETER RESPONSES TO A LEAD REFLECTED PULSE OF THE CEA VALDUC SILENE CRITICAL ASSEMBLY

Evaluators

Thomas M. Miller
Cihangir Celik
Kimberly L. McMahan
Oak Ridge National Laboratory

Yi-Kang Lee
Emmanuel Gagnier
Commissariat à l'Énergie Atomique et aux Énergies Alternatives, Centre de Saclay

Nicolas Authier
Jérome Piot
Xavier Jacquet
Guillaume Rousseau
Commissariat à l'Énergie Atomique et aux Énergies Alternatives, Centre de Valduc

Kevin H. Reynolds
Y-12 National Security Complex

Internal Reviewer

Soon S. Kim
Lawrence Livermore National Laboratory

Independent Reviewers

Matthieu Duluc
François Trompier
Marie Anne Chevallier
Marc Troisne (External Contractor, MILLENNIUM)
Institut de Radioprotection et de Sûreté Nucléaire

Luka Snoj
Institut Jožef Stefan

Jeffrey A. Favorite
Los Alamos National Laboratory

ALARM-TRAN-PB-SHIELD-001

NEUTRON ACTIVATION FOIL AND THERMOLUMINESCENT DOSIMETER RESPONSES TO A LEAD REFLECTED PULSE OF THE CEA VALDUC SILENE CRITICAL ASSEMBLY

IDENTIFICATION NUMBER: ALARM-TRAN-PB-SHIELD-001

KEY WORDS: acceptable, CAAS, energy spectrum, neutron, neutron activation, photon, SILENE, TLD, uranyl nitrate, lead shield

1.0 DETAILED DESCRIPTION

1.1 Overview of Experiment

This benchmark experiment was conducted as a joint venture between the US Department of Energy (DOE) and the French Commissariat à l'Energie Atomique (CEA). Staff at the Oak Ridge National Laboratory (ORNL) in the US and the Centre de Valduc in France planned this experiment. The experiment was conducted on October 13, 2010 in the SILENE critical assembly facility at Valduc. Several other organizations contributed to this experiment and the subsequent evaluation, including CEA Saclay, Lawrence Livermore National Laboratory (LLNL), the Y-12 National Security Complex (NSC), Babcock International Group in the United Kingdom, and Los Alamos National Laboratory (LANL).

The goal of this experiment was to measure neutron activation and thermoluminescent dosimeter (TLD) doses from a source similar to a fissile solution critical excursion. The resulting benchmark can be used for validation of computer codes and nuclear data libraries as required when performing analysis of criticality accident alarm systems (CAASs). A secondary goal of this experiment was to qualitatively test performance of two CAAS detectors similar to those currently and formerly in use in some US DOE facilities. The detectors tested were the CIDAS MkX and the Rocky Flats NCD-91. The CIDAS detects gammas with a Geiger-Muller tube, and the Rocky Flats detects neutrons via charged particles produced in a thin 6LiF disc, depositing energy in a Si solid-state detector. These detectors were being evaluated to determine whether they would alarm, so they were not expected to generate benchmark quality data.

The neutron activation measurements were performed using several different types of activation foils. These foils included Au, Ni, In, Ti, Fe, Mg, and Co. The neutron activation foils were placed at several locations around the lead reflected SILENE critical assembly, some with additional concrete shielding and some unshielded. Within a few hours after SILENE was pulsed, these foils were collected, and their activation was measured by CEA Valduc staff. Note that the Ti foil activation data were not included as part of the experimental data reported by Valduc, but they were part of the experimental setup. This foil was included because the Valduc staff had experience irradiating Ti with fast systems, and they wanted to evaluate using Ti with a thermal system. Several Ti neutron activation reactions have a threshold energy above 5 MeV, but ^{47}Ti(n,p)^{48}Sc has a threshold around 2 MeV. This reaction did not produce good experimental results because the natural abundance of ^{47}Ti is only about 7.5%. Furthermore, the half-life is about 3.5 days, which was logistically a problem because there were five other activation products with shorter half-lives that needed to be measured first.

There were also three types of TLDs. The TLDs provided by CEA Valduc were Al_2O_3 powder (TLD-500), and LiF TLDs were provided by ORNL (TLD-700 crystals and powder). The TLDs were placed around the lead-reflected SILENE critical assembly in close proximity to the neutron activation foils. The TLDs were

collected at the same time as the neutron activation foils after the experiment was conducted, but the TLD doses were not read until several weeks or months later at Valduc and ORNL. Similar to this experiment, measurements of neutron activation and TLD doses were performed at the SILENE critical assembly facility using no shield/reflector (ALARM-TRAN-AIR-SHIELD-001) and a polyethylene shield (ALARM-TRAN-CH2-SHIELD-001).

The neutron activation and TLD dose data submitted here are for a pulse of the SILENE critical assembly when the critical assembly is surrounded by a lead shield/reflector. Whether the lead surrounding SILENE is referred to as a *reflector* or a *shield* depends on perspective. If the focus is on system criticality and reactivity, then the lead is referred to as a *reflector*. If the focus is on neutron activation foil and TLD responses, the lead is referred to as a *shield*. In this report, the lead surrounding the SILENE is referred to as a *reflector*, *shield*, and *reflector/shield*, all of which are discussing the same piece of equipment. In some instances, additional concrete shielding was used between the lead-reflected SILENE critical assembly and the neutron activation foils and TLDs. In total, 41 neutron activation products were measured from 33 activation foils, and 17 TLDs measured photon doses at 7 locations. Based on the analysis of the measured data, the uncertainties of the measurements, and the benchmark uncertainties, 37 measurements of neutron activation products and 4 TLD dose measurements from 4 locations were found to be acceptable for use as benchmark data.

1.2 Description of Experimental Configuration

Detectors were placed at 7 different locations around the SILENE critical assembly to measure neutron activation and photon dose. SILENE was surrounded by a lead reflector, so at a minimum, all the detectors were shielded by lead. Some of the detectors were shielded from the lead-reflected SILENE assembly by blocks of concrete. The detectors used were neutron activation foils and TLDs. The 7 measurement locations are referred to as *collimator A*, *collimator B*, *free field*, and *scattering box* (positions 1 through 4). A photograph of the experimental setup from ALARM-TRAN-AIR-SHIELD-001, which is very similar to this experiment, is shown in Figure 1-1. A plan view drawing of this experiment is shown in Figure 1-2. In Figure 1-2 SILENE is represented as a red circle that is surrounded by a red annulus representing the lead reflector/shield. Also in this figure it appears that the shielding in front of collimator B is 0.21 m thick, but this distance includes a 1 cm gap between the shielding and the front of the collimator. See Figure 1-68 through Figure 1-71 for the definition of scattering box positions 1 through 4. Measurements made for large distances in this experiment (greater than 50 to 100 cm) were made using a laser measuring device. Small distances (less than 50 to 100 cm) were made using a meter stick or measuring tape that had increments of millimeters. All of the angles shown in figures in Section 1.0 are approximate, and are based on markings on the floor of the SILENE reactor room (see Figure 1-1). The angles used to locate pieces of equipment around SILENE in the benchmark model (Section 3.0) are calculated more precisely using trigonometry and distance measurements between fixed pieces of equipment and/or the SILENE room walls.

Figure 1-1. Experimental setup without reflector.

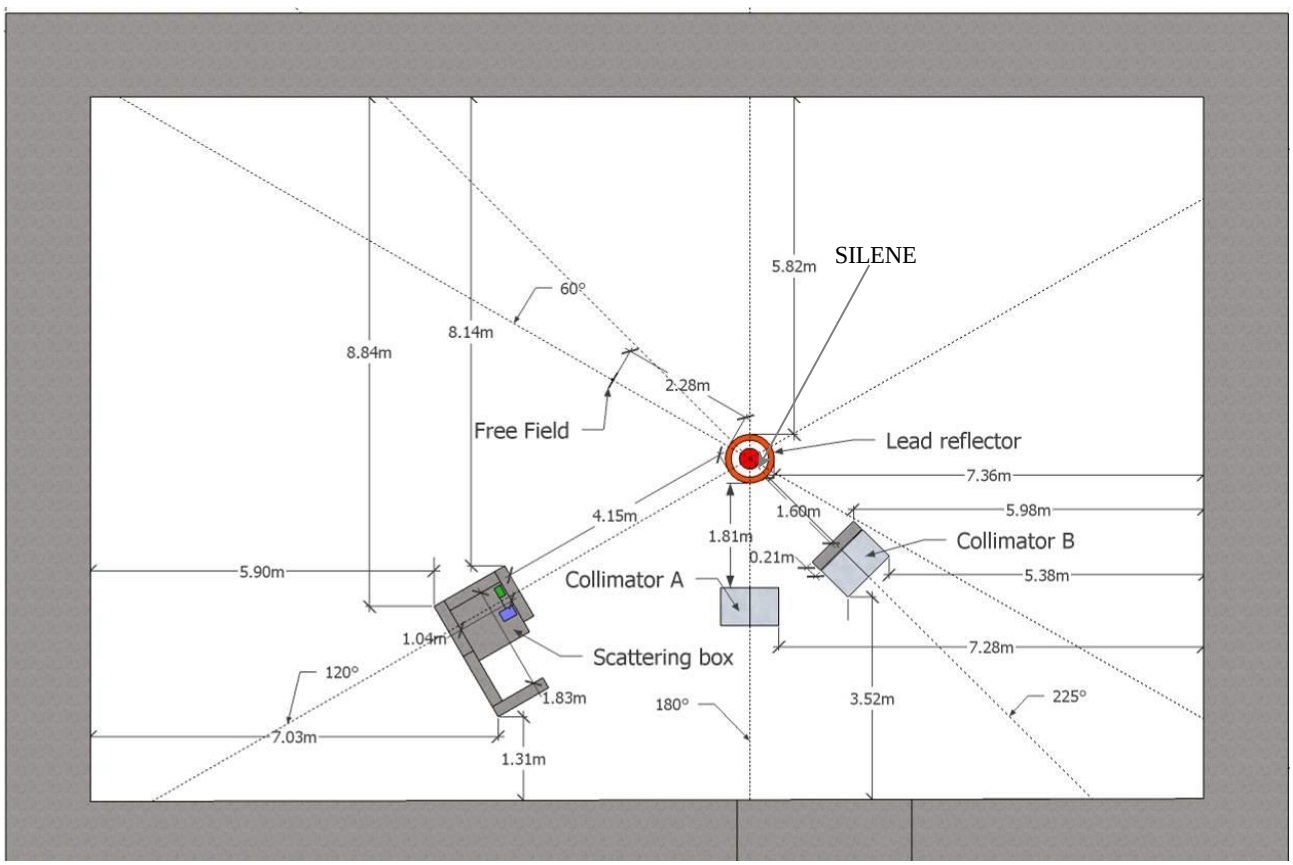

Figure 1-2. Overview of experiment configuration with dimensions.

The following subsections provide details about the experimental setup and dimensions. Due to the importance of the source (SILENE critical assembly including the reflector) and detectors (neutron activation

foils and TLDs) in shielding benchmarks, the discussion of these items is in Sections 1.4 and 1.5, respectively.

1.2.1 SILENE Room – The walls, floor, and ceiling surrounding SILENE are constructed of thick concrete. The dimensions of this room are shown in Figure 1-3 and Figure 1-4.

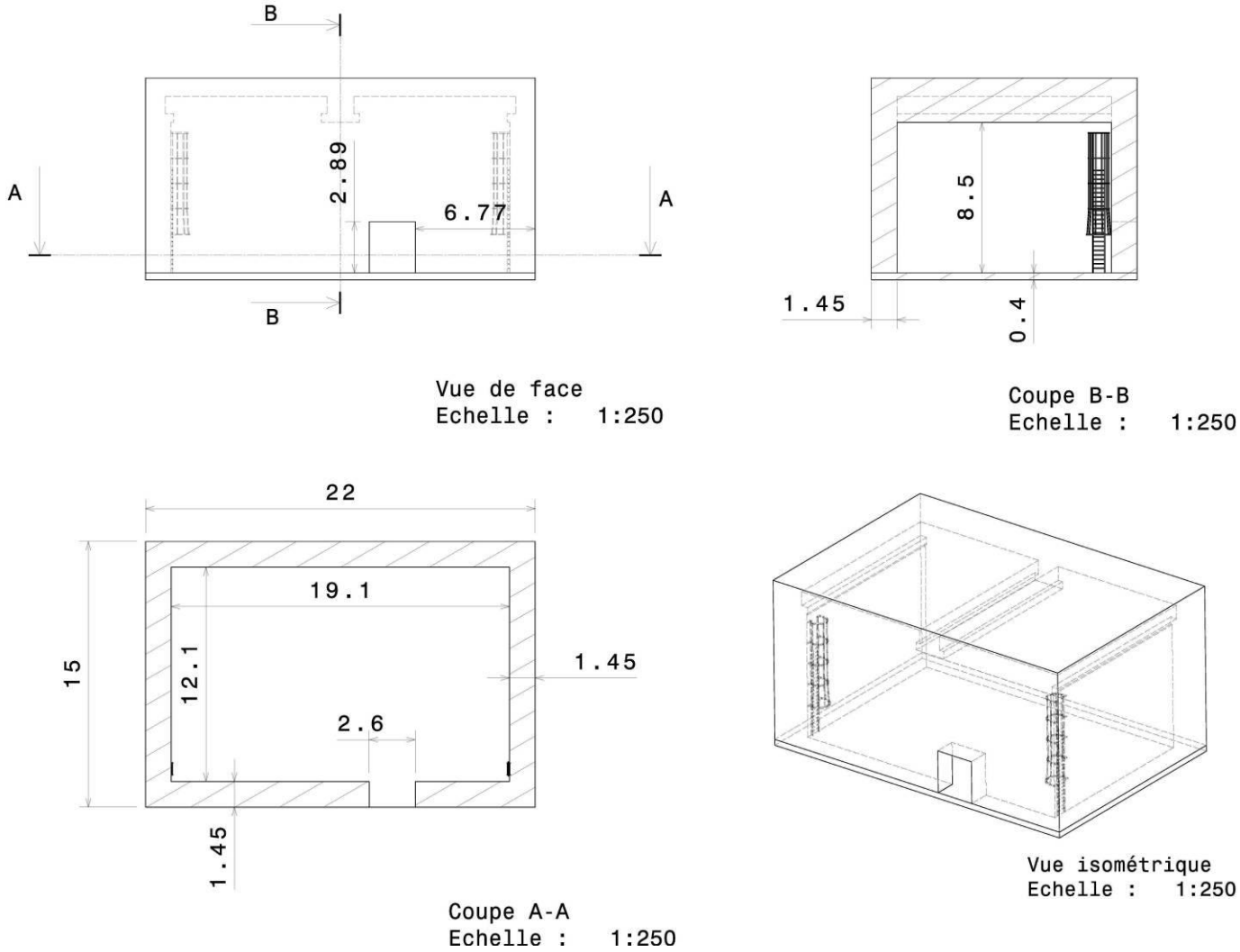

Figure 1-3. SILENE critical assembly room (dimensions in meters).

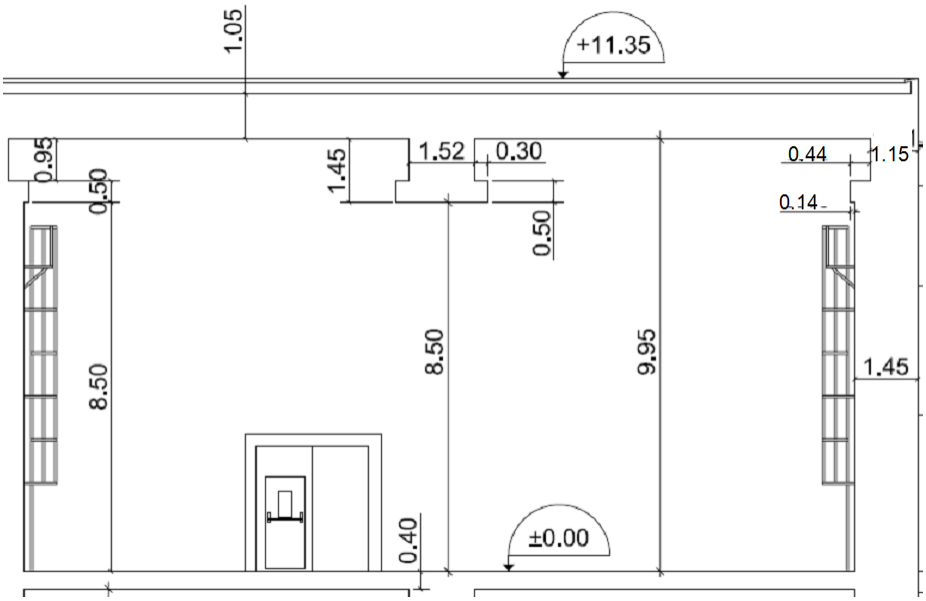

Figure 1-4. Details of crane supports in SILENE room (dimensions in meters).

Figure 1-3 and Figure 1-4 do not include details about the doors of this room, but Figure 1-5 through Figure 1-7 provide these details. Figure 1-5 shows the two hollow steel doors that provide passage through the SILENE room walls (inner door also shown in Figure 1-4 and Figure 1-1 behind the collimators). Figure 1-6 and Figure 1-7 show the two large concrete doors outside the SILENE room that provide shielding between SILENE and the space outside the SILENE room. In Figure 1-5, the two concrete shield doors appear to be the same size, but actually the concrete shield door nearest the concrete wall is 60 cm × 490 cm × 390 cm, while the other concrete shield door is 74 cm × 450 cm × 360 cm.

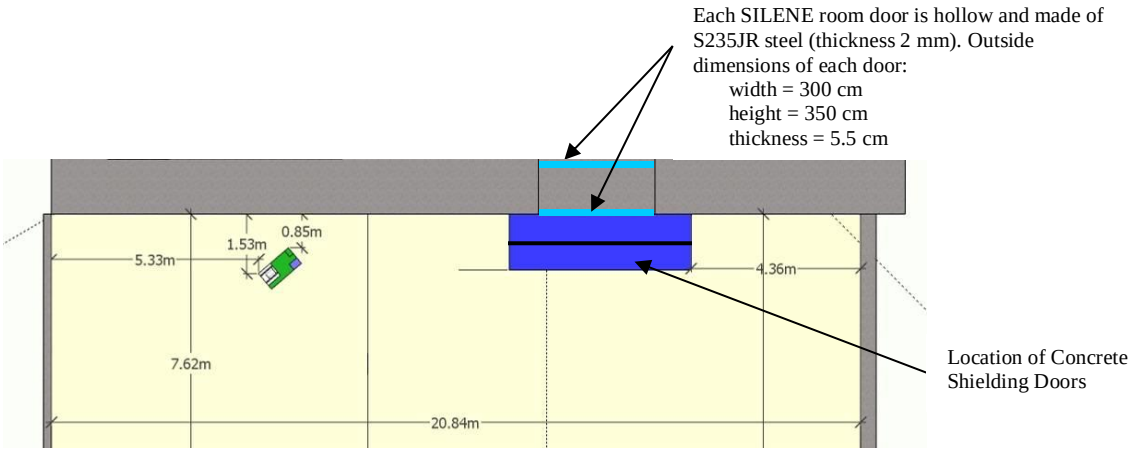

Figure 1-5. SILENE room doors.

ALARM-TRAN-PB-SHIELD-001

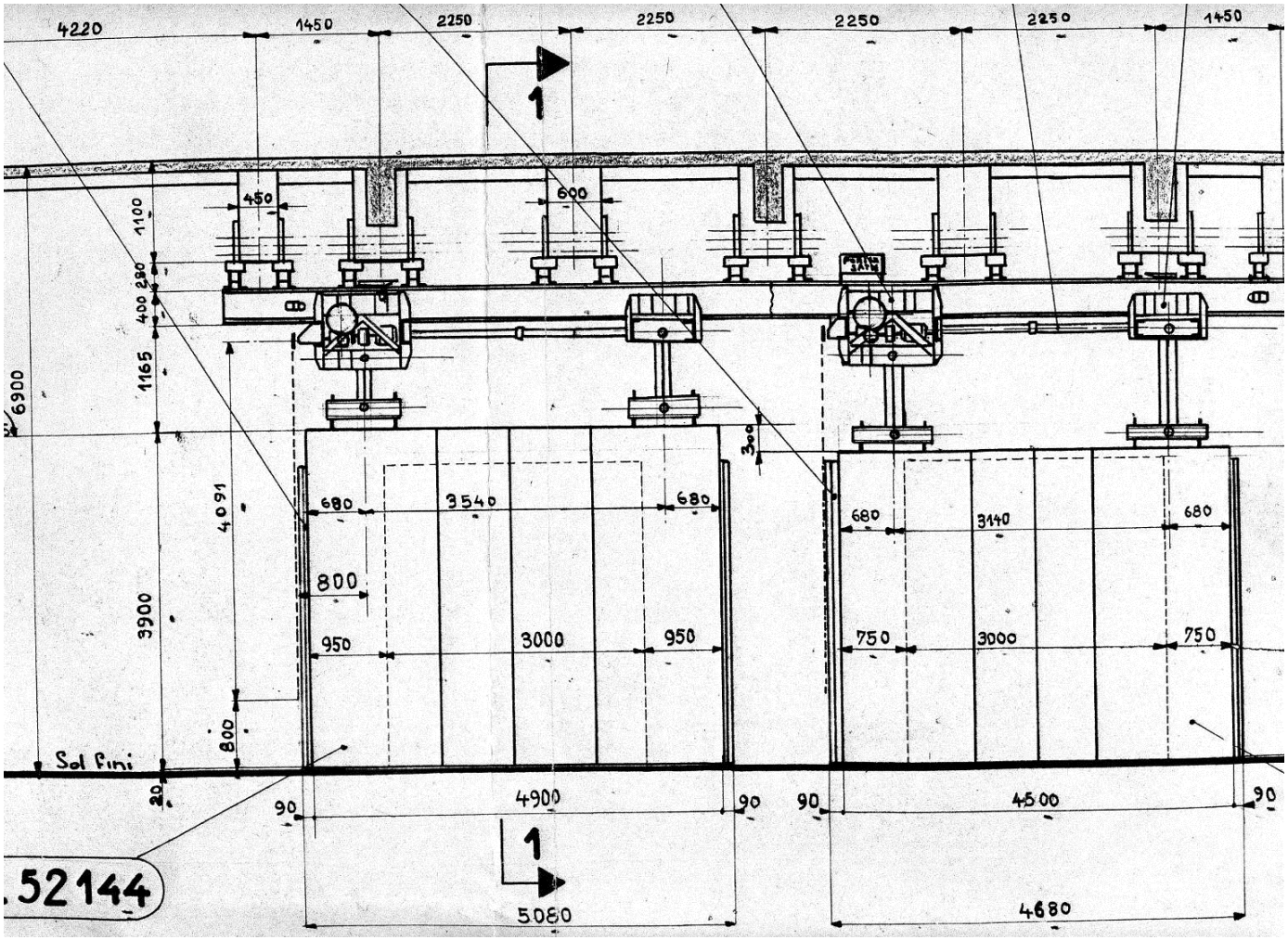

Figure 1-6. SILENE room shielding doors; view from hallway outside the room (dimensions in mm). The Door on the Left is Nearest to the Wall.

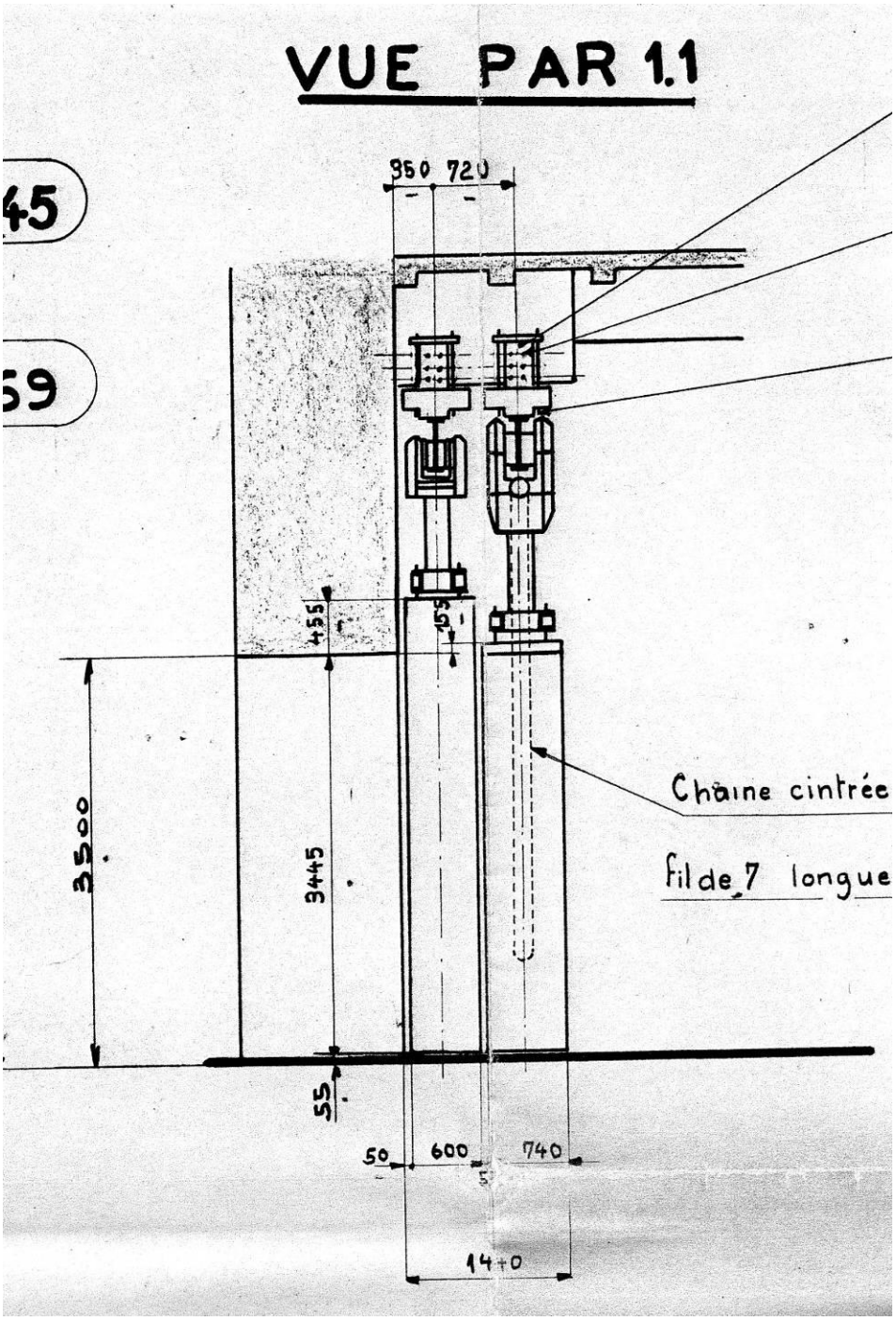

Figure 1-7. SILENE room shielding doors; view from the side (dimensions in mm).

None of the previous figures show the exact location of SILENE in the room where the experiment was performed. Figure 1-8 shows the location of the central axis of the cylindrical SILENE critical assembly within this room (the reflector is not represented in this figure).

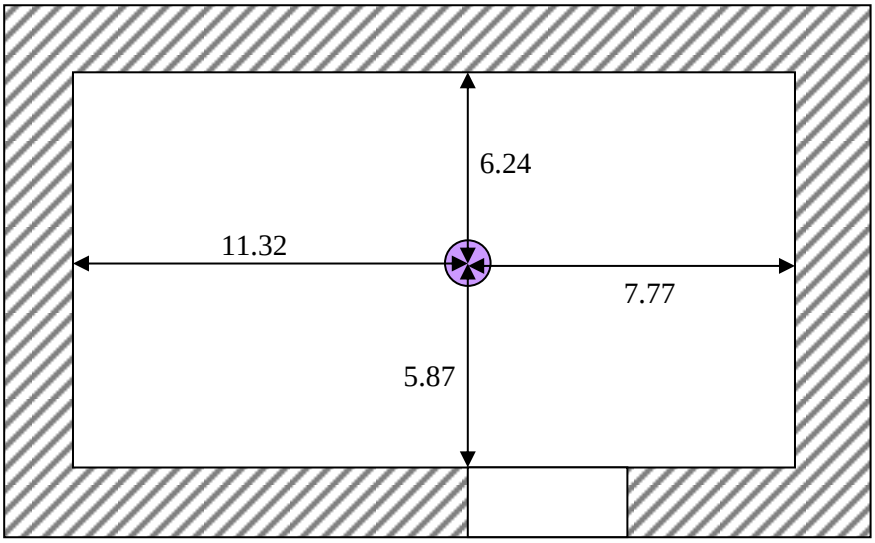

Figure 1-8. Location of axis of SILENE in room (dimensions in meters).

1.2.2 Collimator Boxes – The collimator boxes are open on the side nearest SILENE. Collimator A can be seen in Figure 1-1, and both collimators can be seen in Figure 1-9 below. There was a 20 cm thick block of concrete between SILENE and collimator B in this experiment, which is nearly identical to that seen in Figure 1-1. No concrete was placed between SILENE and collimator A in this experiment.

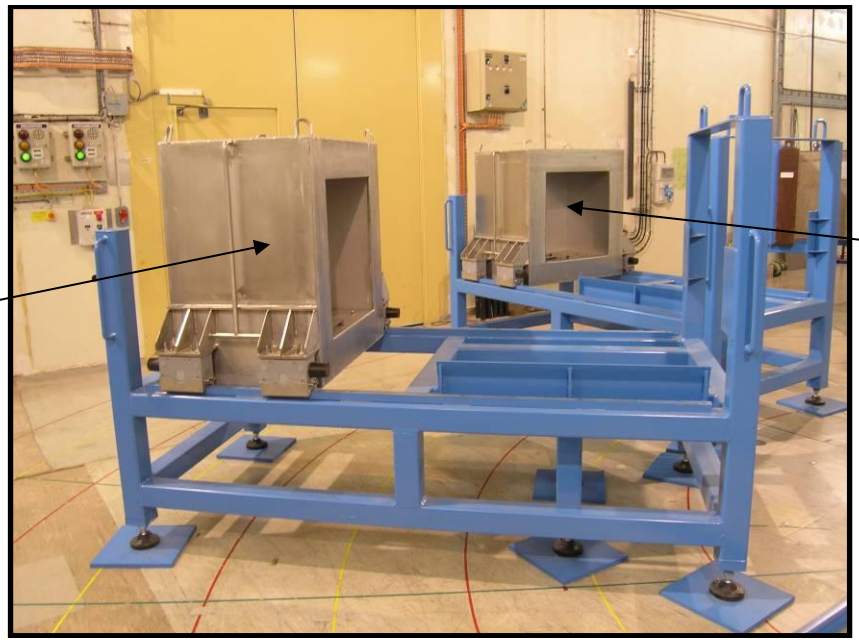

Figure 1-9. Collimators A and B on their stands (without concrete shielding).

These two collimator boxes have identical designs of layered materials. The layers are stainless steel, copper, lead, and a plaster containing boron and polyethylene. The French name of this plaster is *plâtre polyéthylène boré*, which is referred to as PPB9 for the remainder of this evaluation. Samples or detectors can be placed inside the collimator boxes, and the shielding provided by the boxes exposes the samples or detectors to

direct fission radiation from SILENE, isolating the samples or detectors from scattered radiation within the SILENE room. The two attachments on each side of the collimators are housing for wheels that roll along a track on the collimator stands (4 wheels per collimator). These wheels and the track allow for easy movement of the collimators.

The collimators sit on steel S235JR stands (painted blue in photographs) that allow shielding materials to be placed between SILENE and the inner cavity of the collimators. This is best observed in Figure 1-1, collimator B. Note that the stands are constructed of hollow rectangular tubes measuring 10 cm × 10 cm with a wall thickness of 5 mm. Figure 1-10 through Figure 1-13 provide details about the collimator stands and some of the outside dimensions of the collimators. Figure 1-14 through Figure 1-17 provide details about the different layers of material that make the internal portions of the collimators, which are uniform on all sides of the collimator boxes. Finally, Figure 1-18 and Figure 1-19 show details inside the collimators.

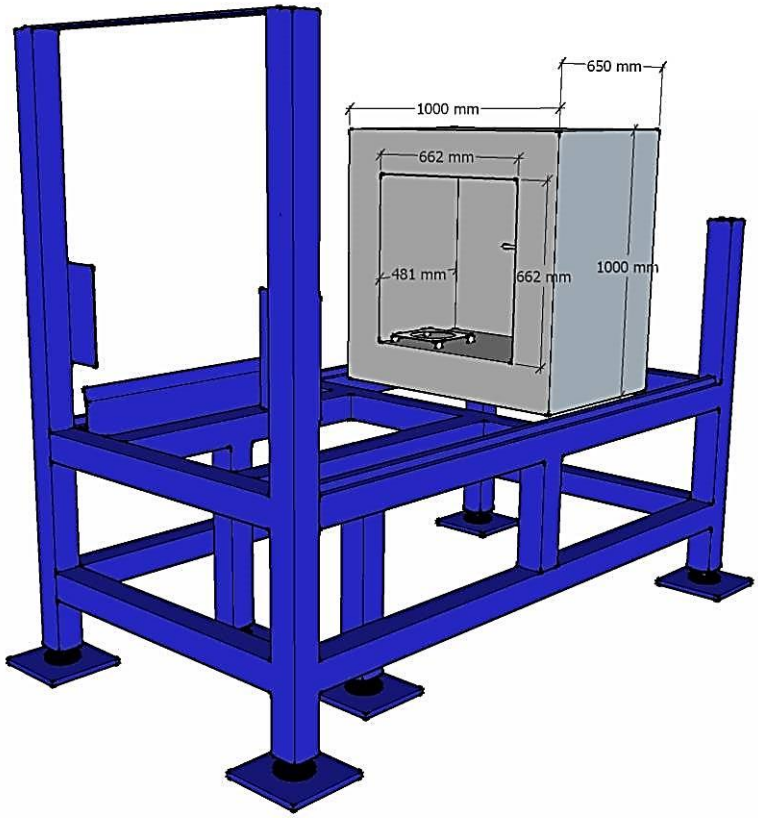

Figure 1-10. Isometric view of collimator and stand.

ALARM-TRAN-PB-SHIELD-001

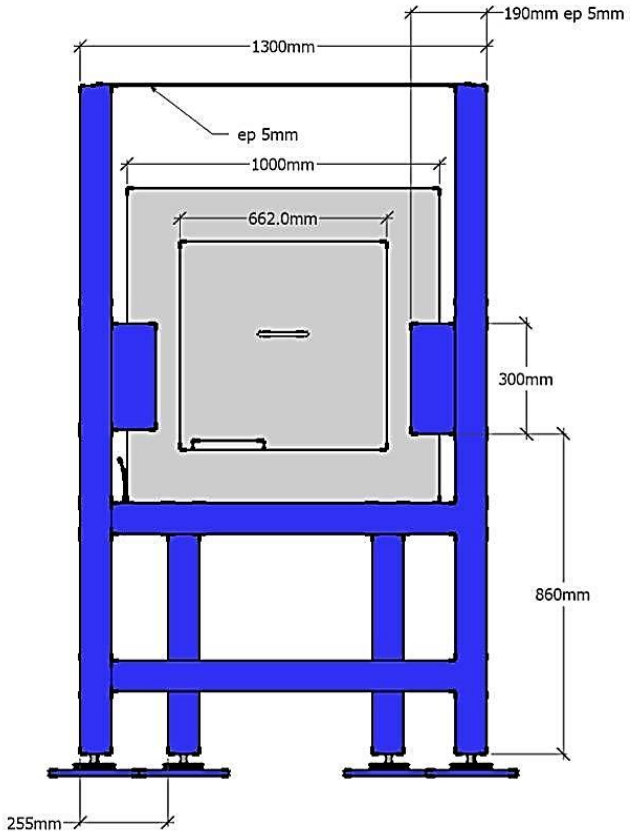

Figure 1-11. Front view of collimator and stand.

ALARM-TRAN-PB-SHIELD-001

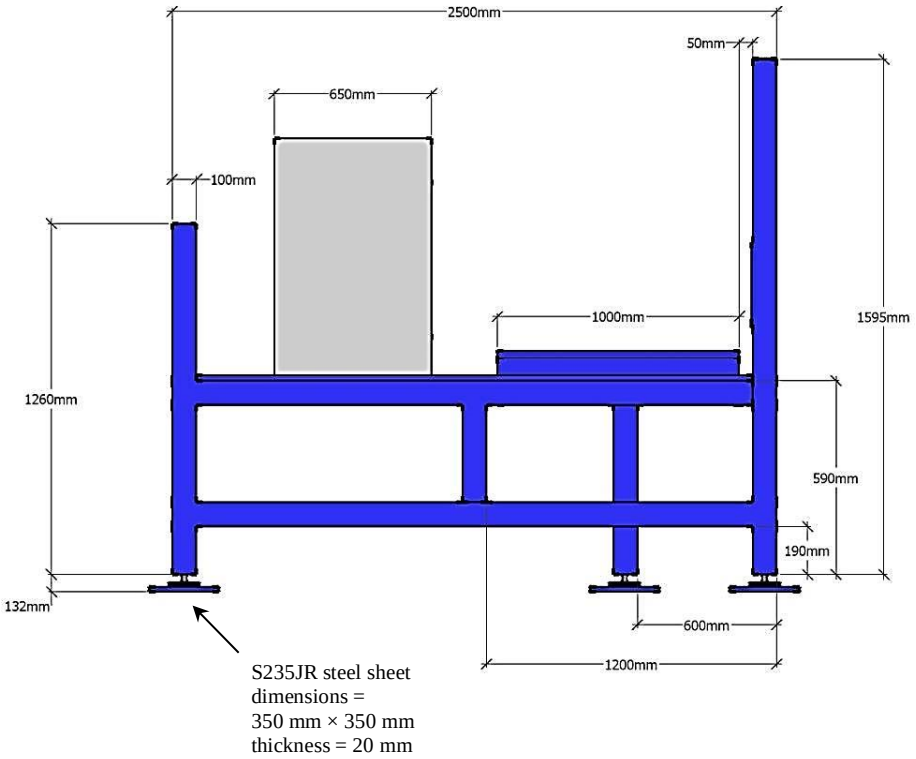

Figure 1-12. Side view of collimator and stand.

ALARM-TRAN-PB-SHIELD-001

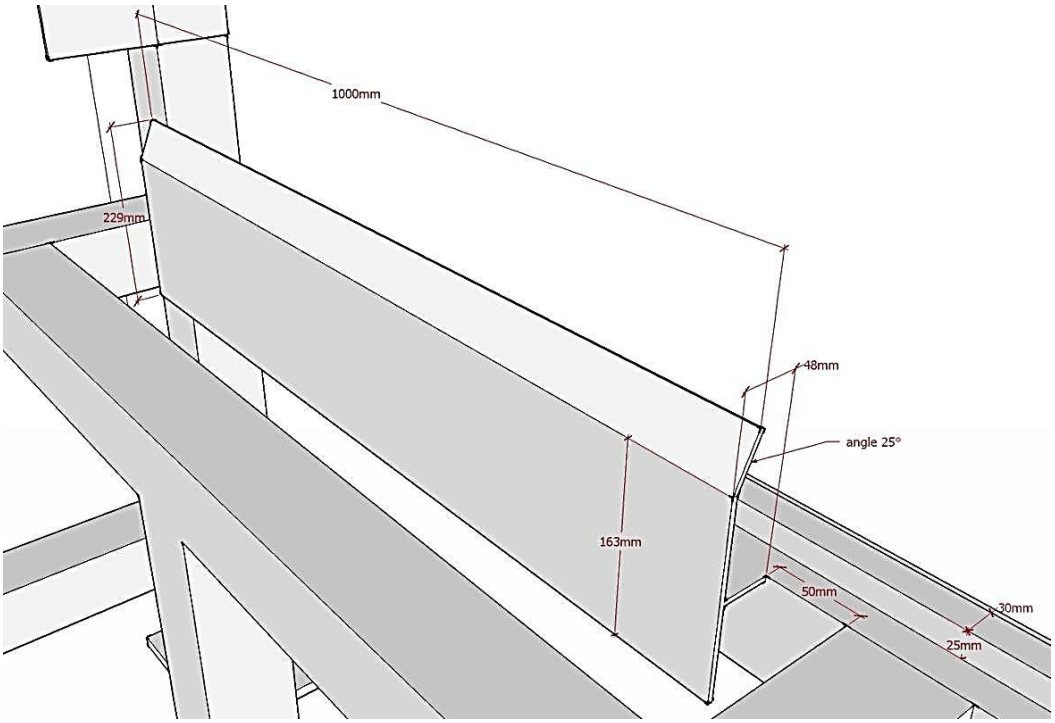

Figure 1-13. Detail of collimator guide on stand.

ALARM-TRAN-PB-SHIELD-001

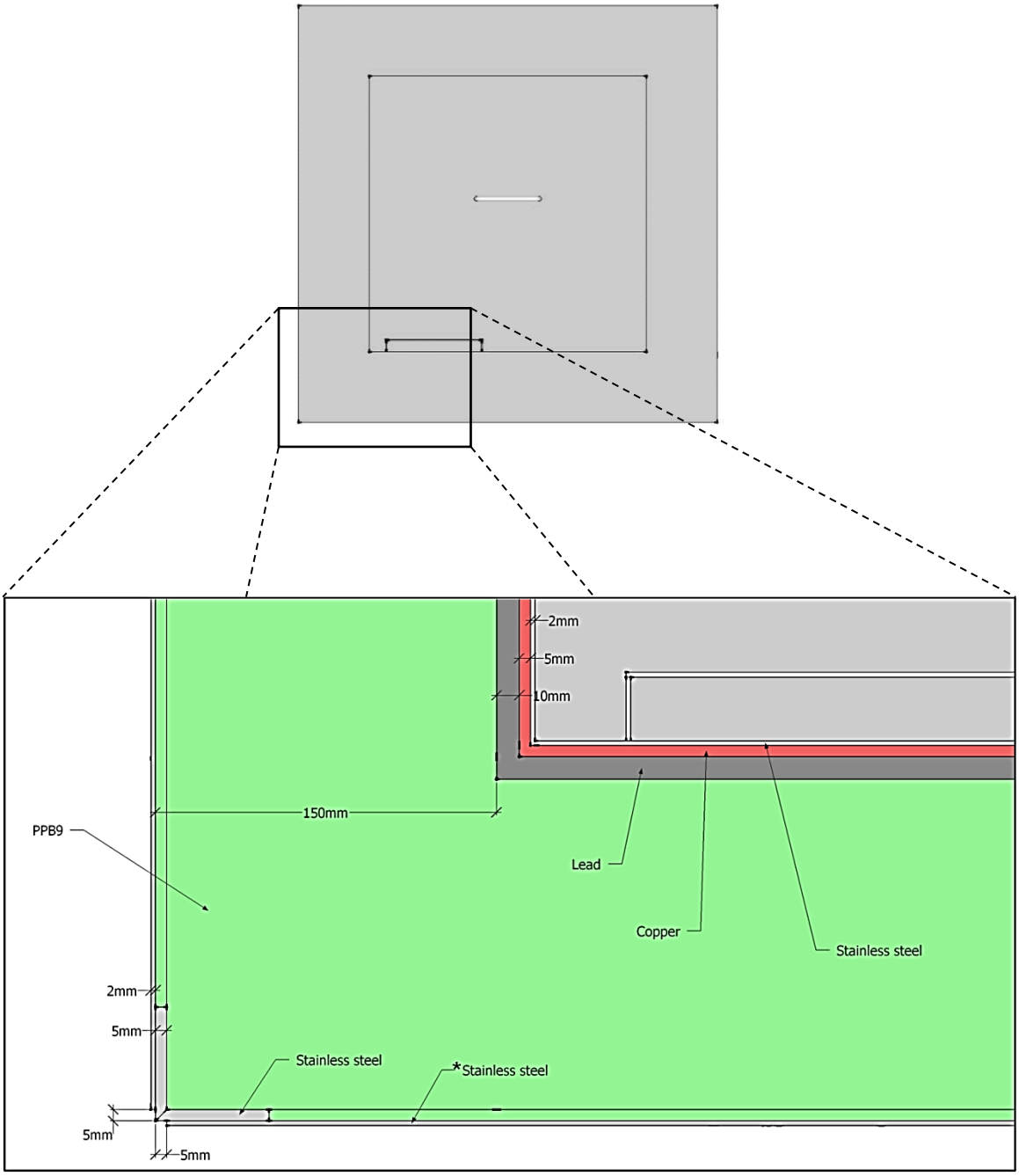

Figure 1-14. Cross section of collimator layers, front view.

ALARM-TRAN-PB-SHIELD-001

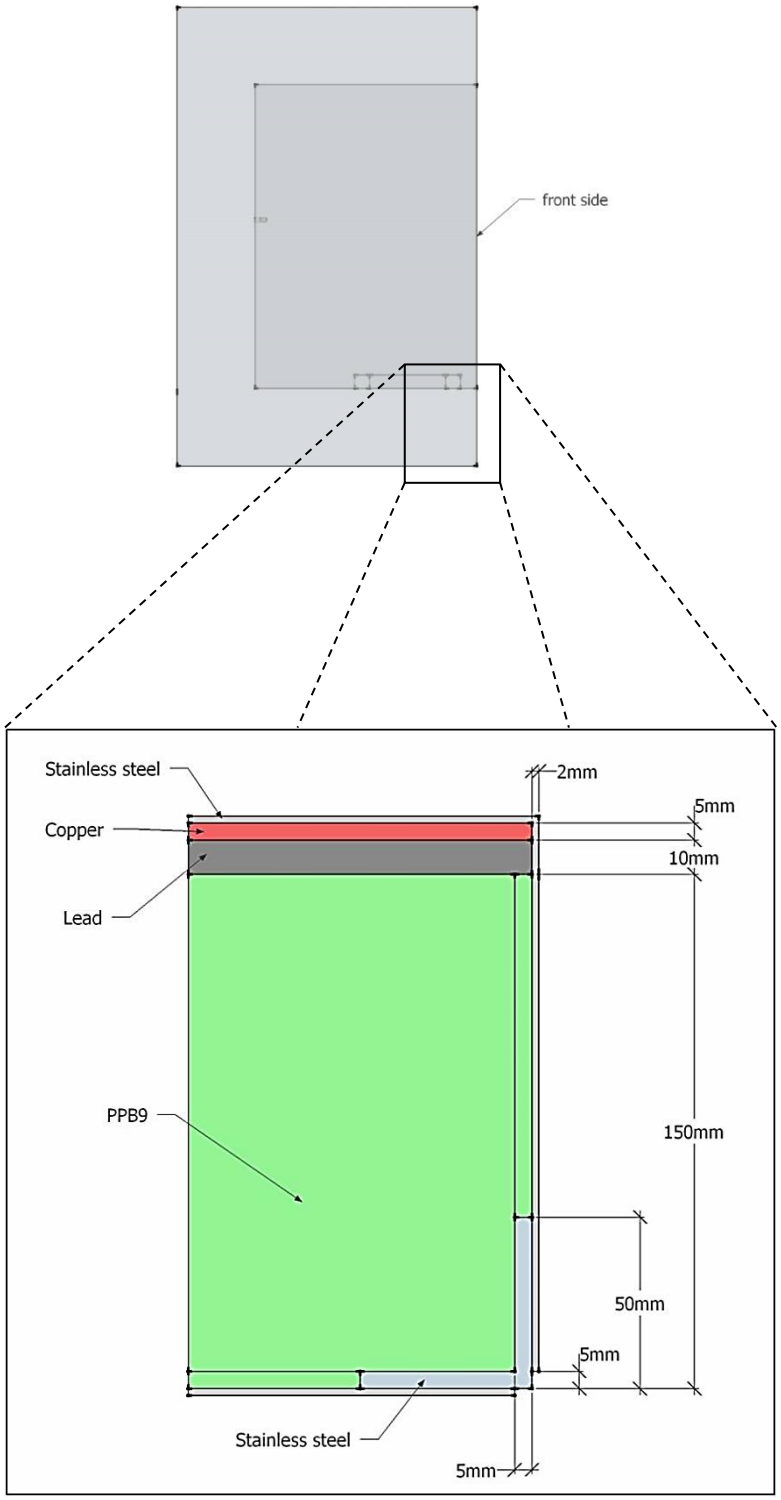

Figure 1-15. Cross section of collimator layers, side view.

ALARM-TRAN-PB-SHIELD-001

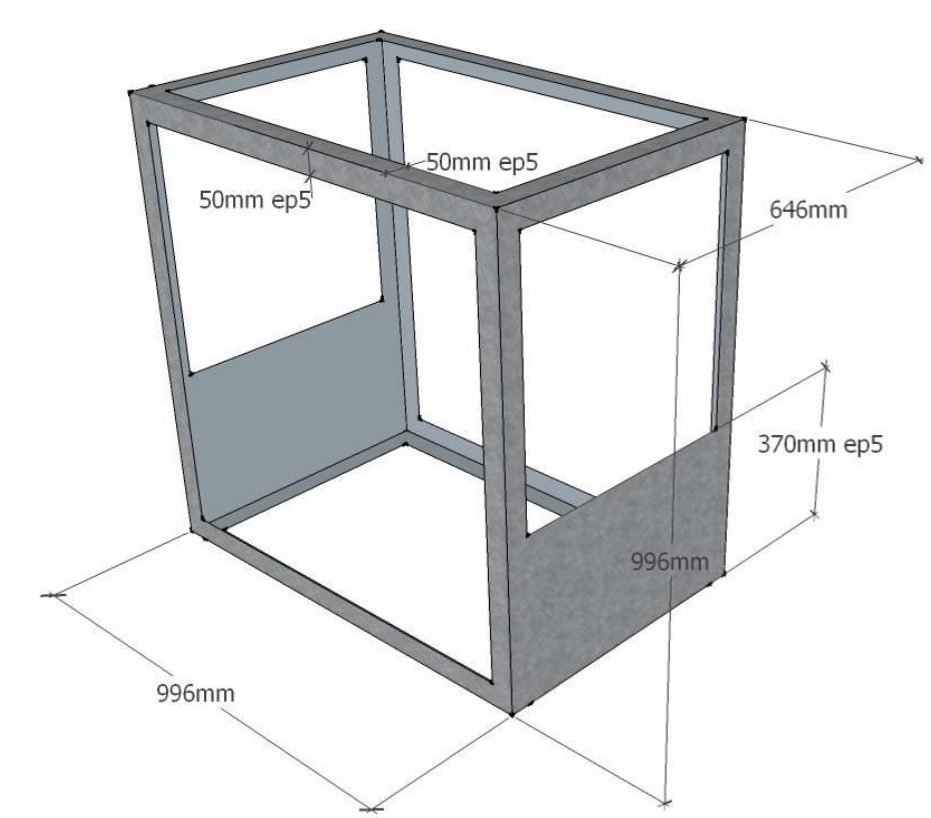

Figure 1-16. Isometric view of collimator inner stainless steel frame (thickness 5 mm).

ALARM-TRAN-PB-SHIELD-001

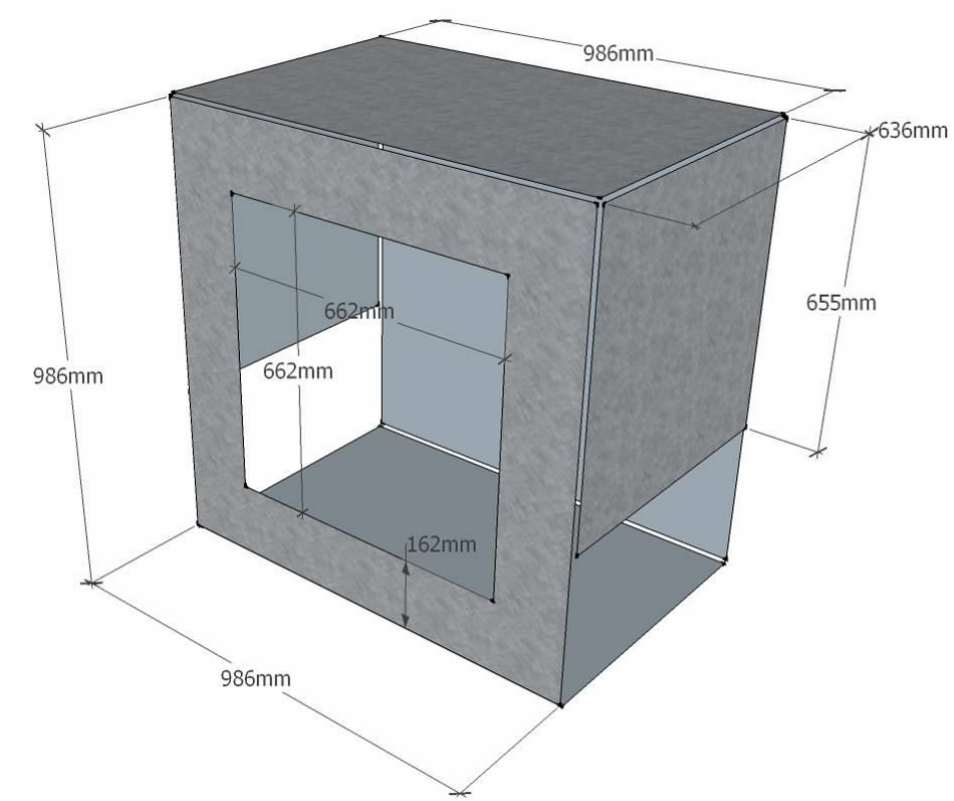

Figure 1-17. Isometric view of collimator outer stainless steel layer (thickness 2 mm).

ALARM-TRAN-PB-SHIELD-001

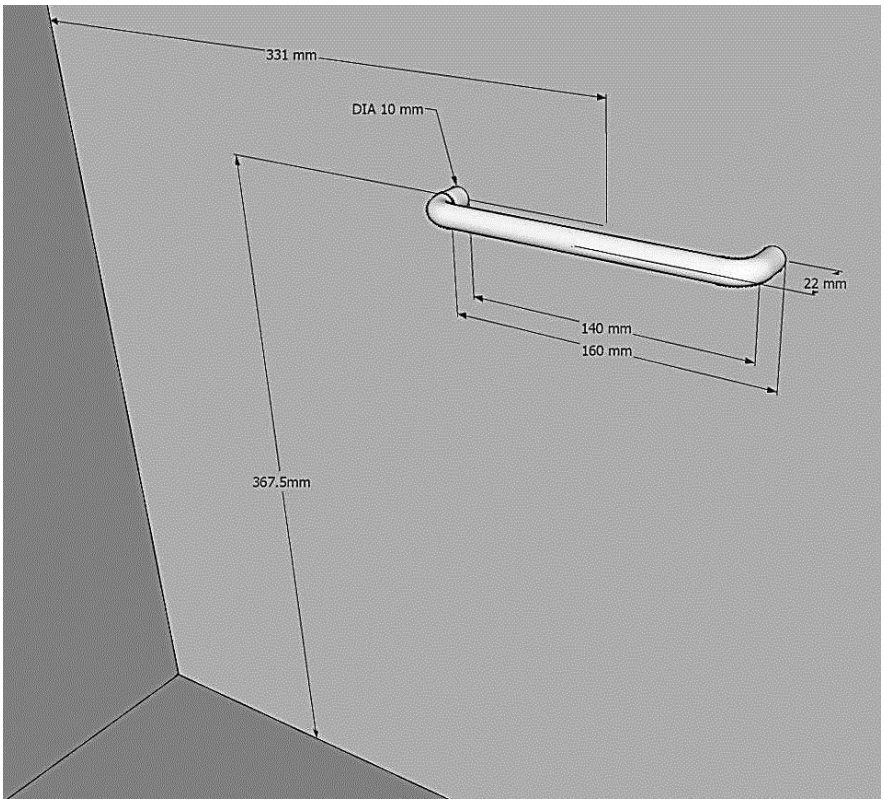

Figure 1-18. Detail of collimator activation foil holder support bar.

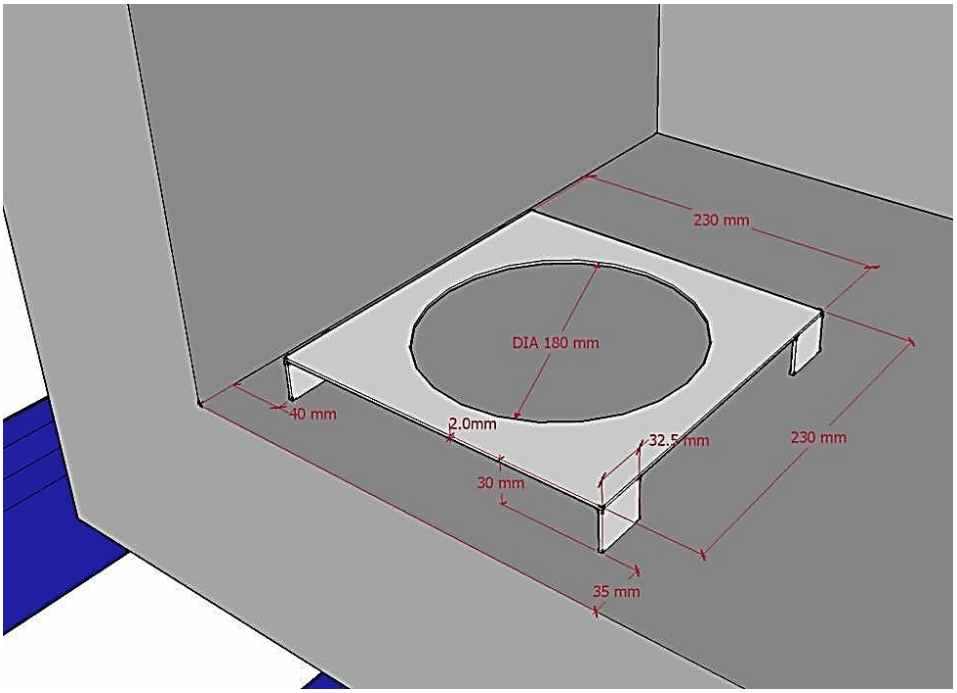

Figure 1-19. Detail of Small support stand inside collimator.

ALARM-TRAN-PB-SHIELD-001

While the previous figures provide details about the collimator dimensions and materials within the collimators, Figure 1-20 through Figure 1-23 locate the collimators and stands within the SILENE room. In Figure 1-20 and Figure 1-21, SILENE is represented by a red circle and the lead reflector is not represented in these figures. The distance from SILENE to the collimator stands in Figure 1-20 and Figure 1-21 is measured from the bottom portion of SILENE, which has an outside radius of 20 cm. All other dimensions in Figure 1-20 and Figure 1-21 are measured from one of the four concrete walls of the SILENE room to the collimator stand. Figure 1-22 and Figure 1-23 show multiple measurements of the distance of each collimator box above the concrete floor. Each collimator is centered on its stand from side to side (left to right in Figure 1-20). The location of each collimator on the stand from front to back (top to bottom in Figure 1-20) is approximately the same for both collimators. These distances are shown in Figure 1-2.

ALARM-TRAN-PB-SHIELD-001

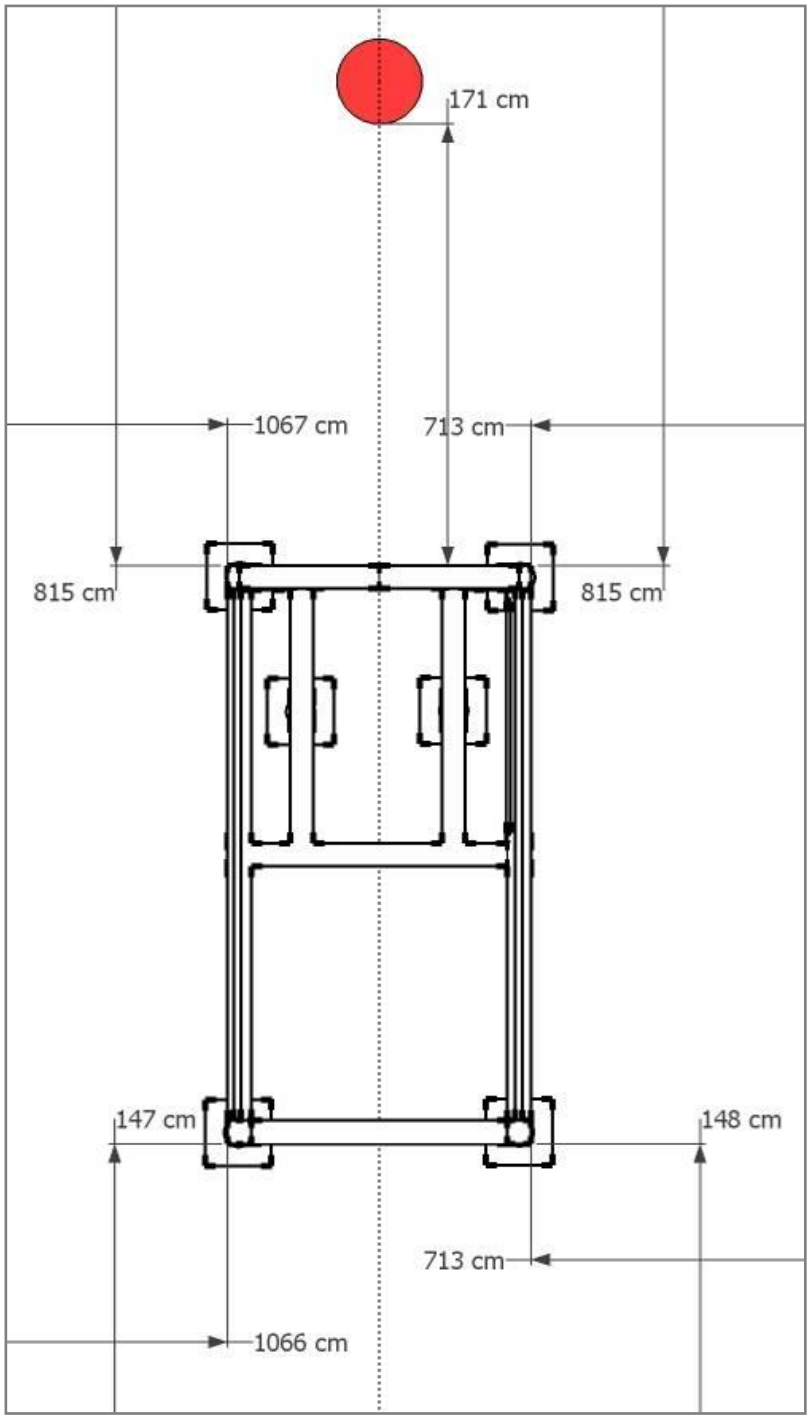

Figure 1-20. Location of collimator A stand within the SILENE room.

ALARM-TRAN-PB-SHIELD-001

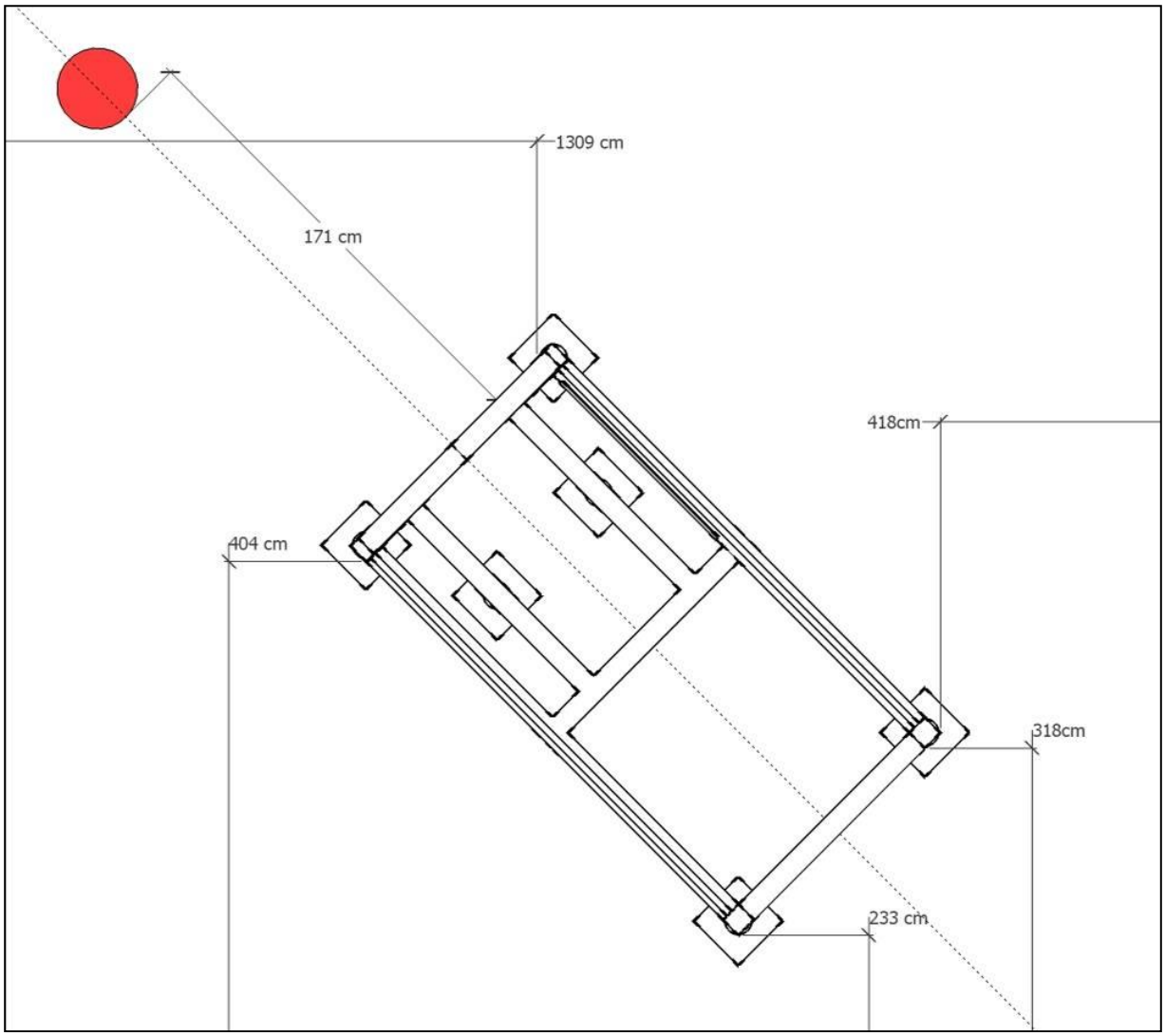

Figure 1-21. Location of collimator B stand within the SILENE room.

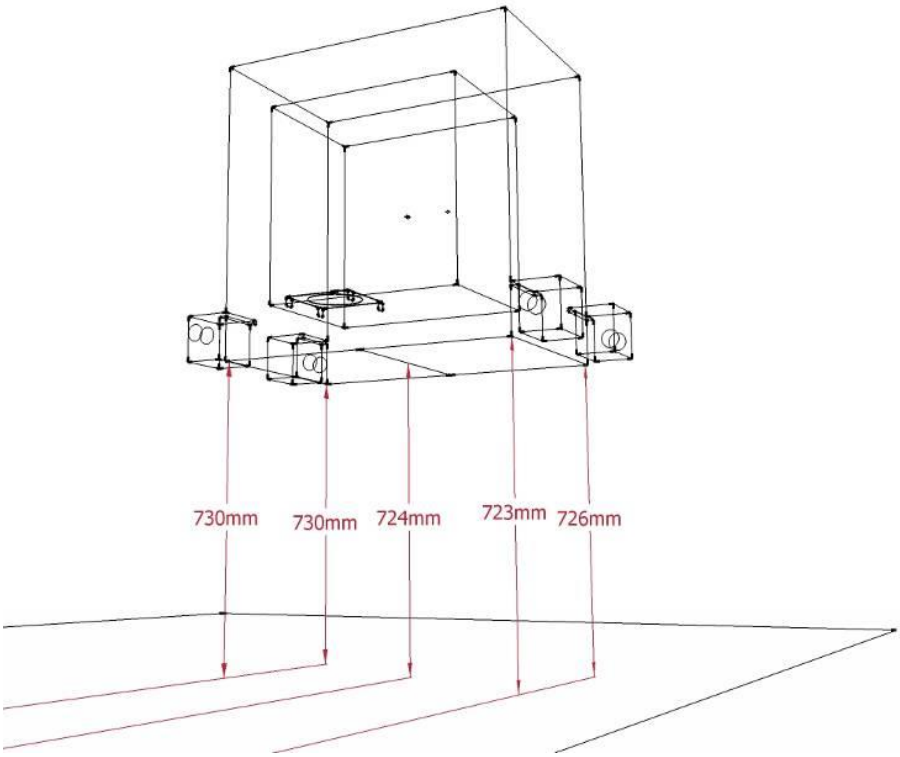

Figure 1-22. Height of collimator A above SILENE room floor.

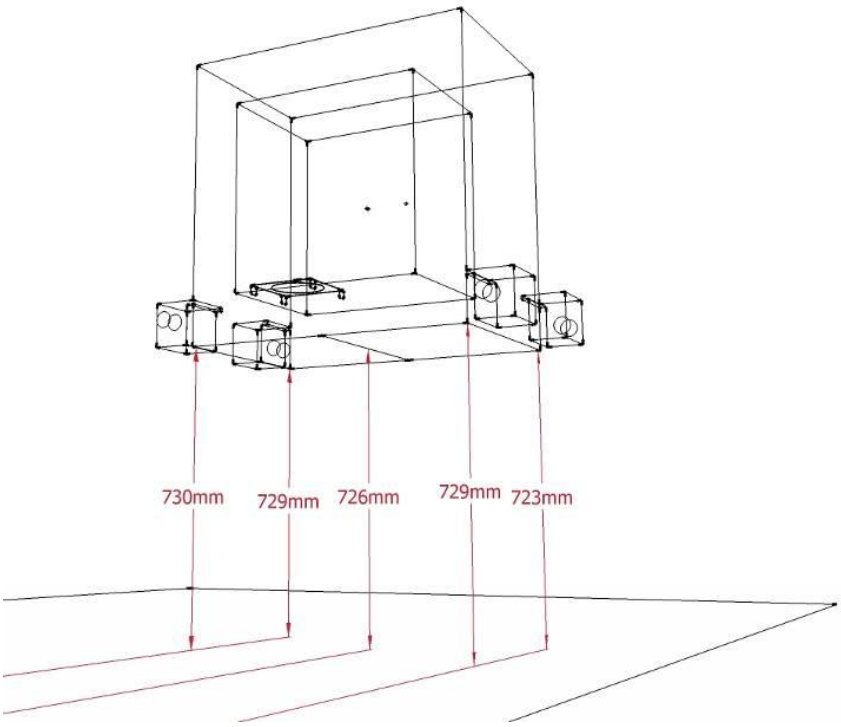

Figure 1-23. Height of collimator B above SILENE room floor.

1.2.3 Collimator B Shielding –A 20 cm thick standard concrete block was between SILENE and collimator B in this experiment. The barite concrete block used in ALARM-TRAN-AIR-SHIELD-001 can be seen in Figure 1-1, but the standard concrete block looks identical. Below in Figure 1-24 is another image of this shield block in front of collimator B. Barely observable in Figure 1-24 is a 1 cm gap between the standard concrete shield and the collimator. This gap allowed for access of cables to the CAAS detectors inside collimator B. Figure 1-25 is a photograph of one of the concrete shield blocks used in this experiment, which is followed by drawings with dimensions in Figure 1-26 and Figure 1-27. The frames and lift points of all the concrete blocks are all made of S235JR steel.

ALARM-TRAN-PB-SHIELD-001

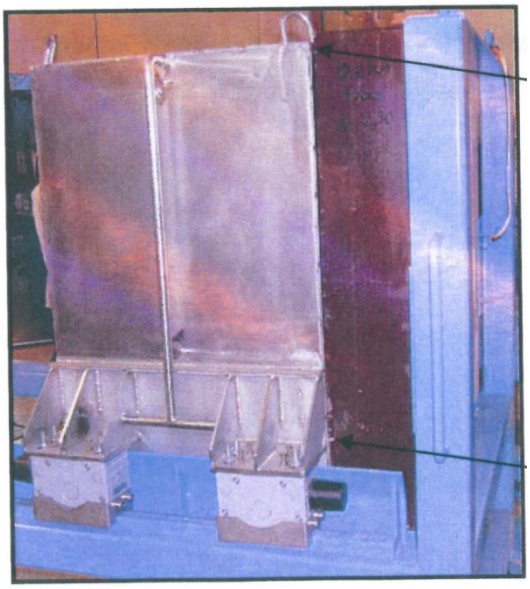

Figure 1-24. Collimator B, standard concrete shield block, and 1 cm Gap

Figure 1-25. Concrete Shield Block.

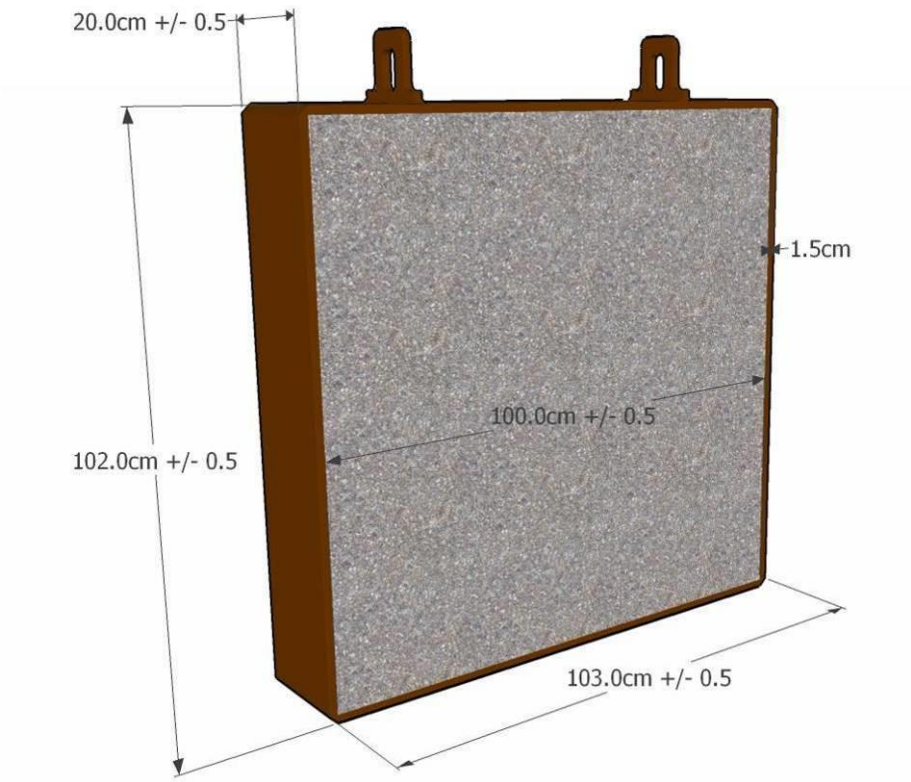

Figure 1-26. Dimensions of concrete shield blocks (all dimensions are cm).

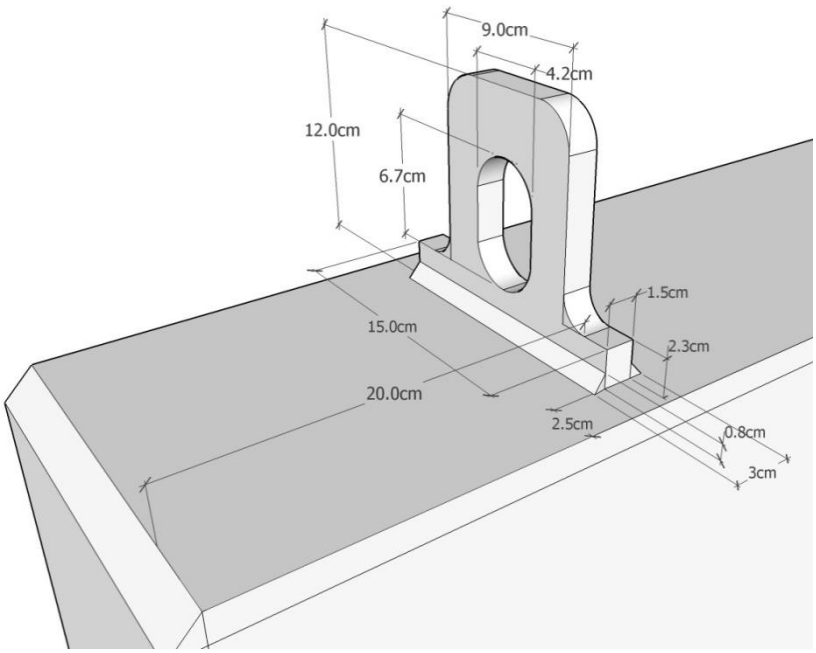

Figure 1-27. Dimensions of concrete shield block lift points.

1.2.4 Foil Holders – A holder containing the neutron activation foils in collimators A and B is inside of both collimators hanging on the support bar (described in Figure 1-18). This holder is made of aluminum alloy AG3M. Figure 1-28 shows a photograph of one of these holders, and Figure 1-29 through Figure 1-31 are drawings of the holder with dimensions. (The CEA TLD shown in these drawings will be described in more detail later and is not normally a part of these holders.)

Figure 1-28. Collimator foil holder with neutron activation foils.

ALARM-TRAN-PB-SHIELD-001

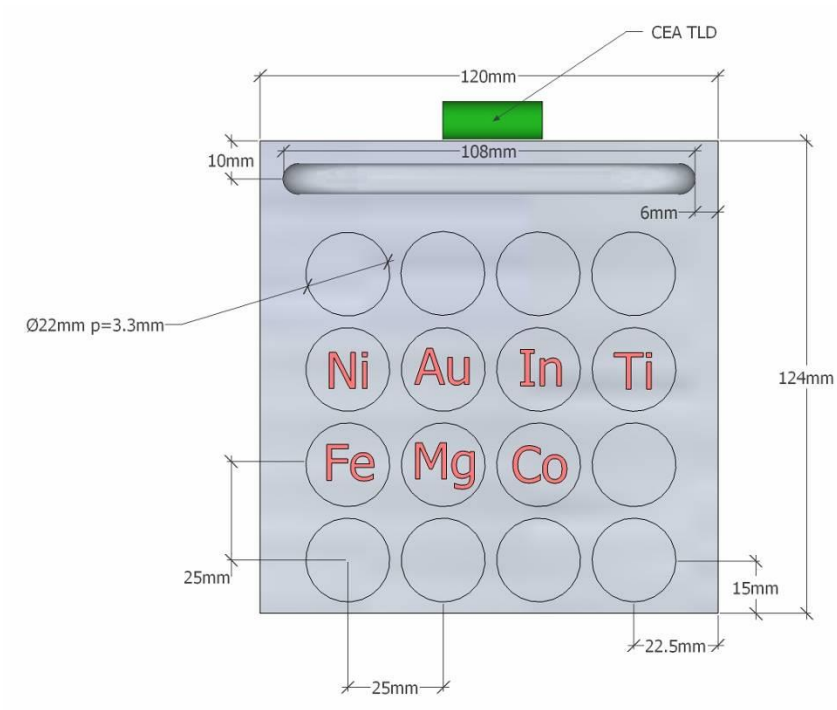

Figure 1-29. Front of Foil holder without front plate.

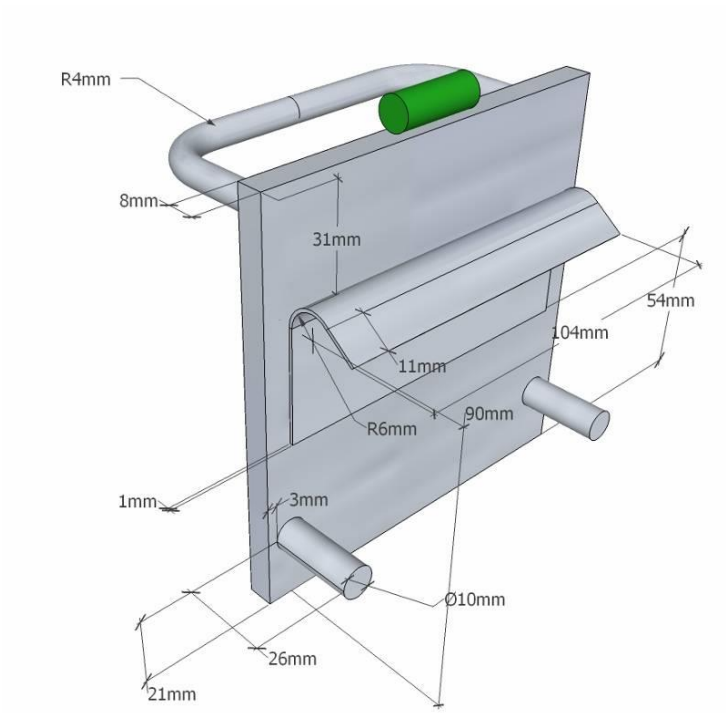

Figure 1-30. Back and side of foil holder.

ALARM-TRAN-PB-SHIELD-001

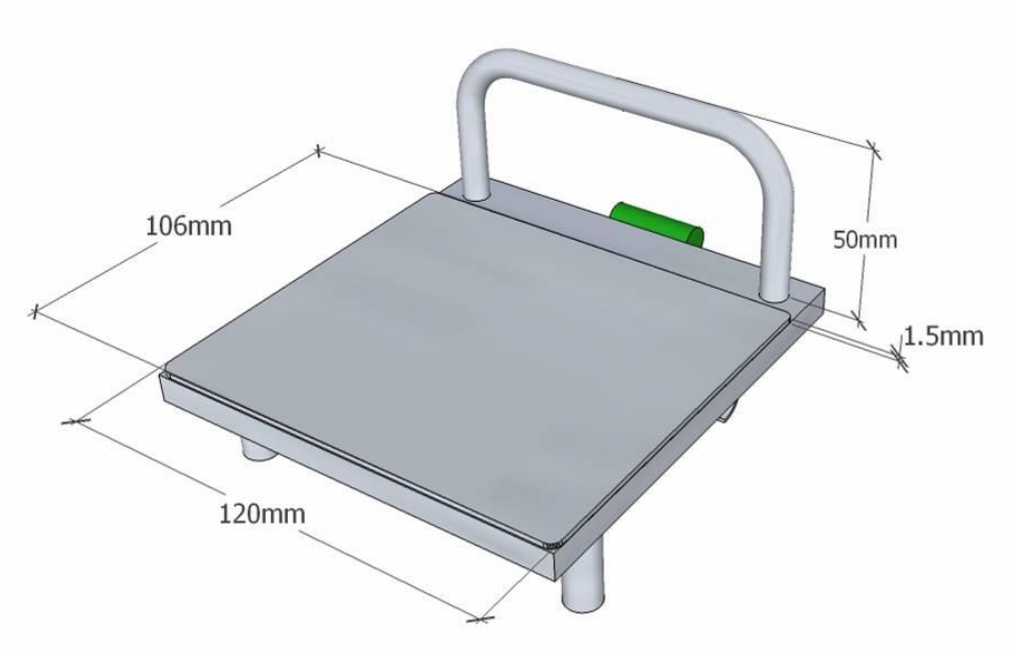

Figure 1-31. Front of foil holder with front plate.

1.2.5 Free Field Location – The purpose of the free field location is to place a set of neutron activation foils and TLDs approximately the same distance from SILENE as those in collimators A and B. However, as the name of this location suggests, the activation foils and TLDs at this location are free of any shielding (collimator box or concrete) and are exposed to the radiation field emitted by SILENE and from scattering of the experimental room walls. Figure 1-32 is a photograph of the stand used to support the neutron activation foils and TLDs at the free field location, which is followed by drawings with dimensions in Figure 1-33 through Figure 1-35. The exact composition of the free field stand is unknown, but it clearly consists of steel (lower blue part), concrete, and aluminum. The free field stand can be located within the SILENE room via Figure 1-2. The distance in Figure 1-2 (2.28 m) is measured from the outside of the lead reflector / shield surrounding SILENE to the axis of the cylindrical portion of the free field stand.

ALARM-TRAN-PB-SHIELD-001

Figure 1-32. Free field location stand.

ALARM-TRAN-PB-SHIELD-001

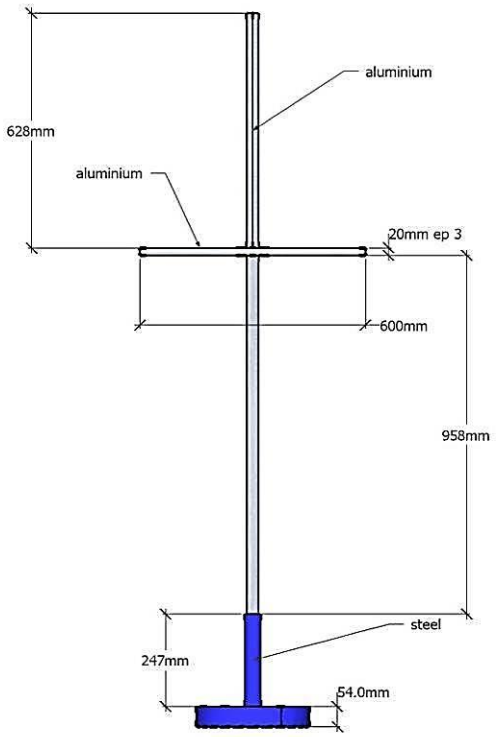

Figure 1-33. Front view of free field stand.

ALARM-TRAN-PB-SHIELD-001

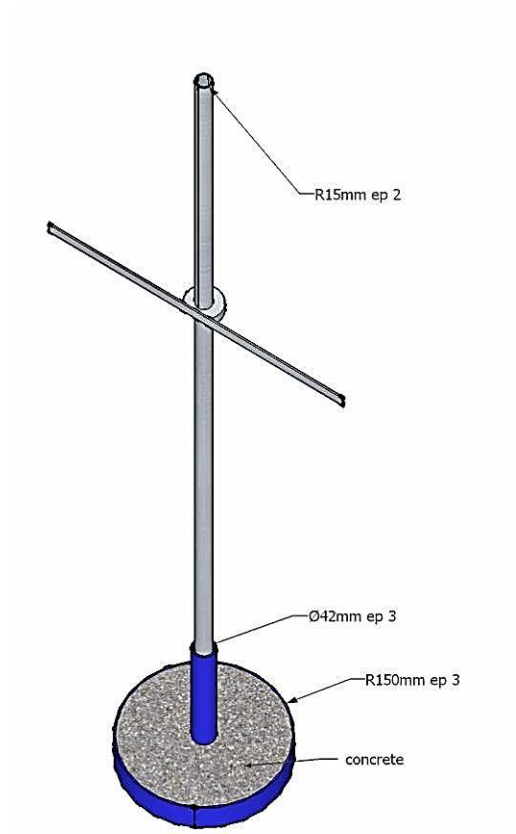

Figure 1-34. Isometric view of free field stand.

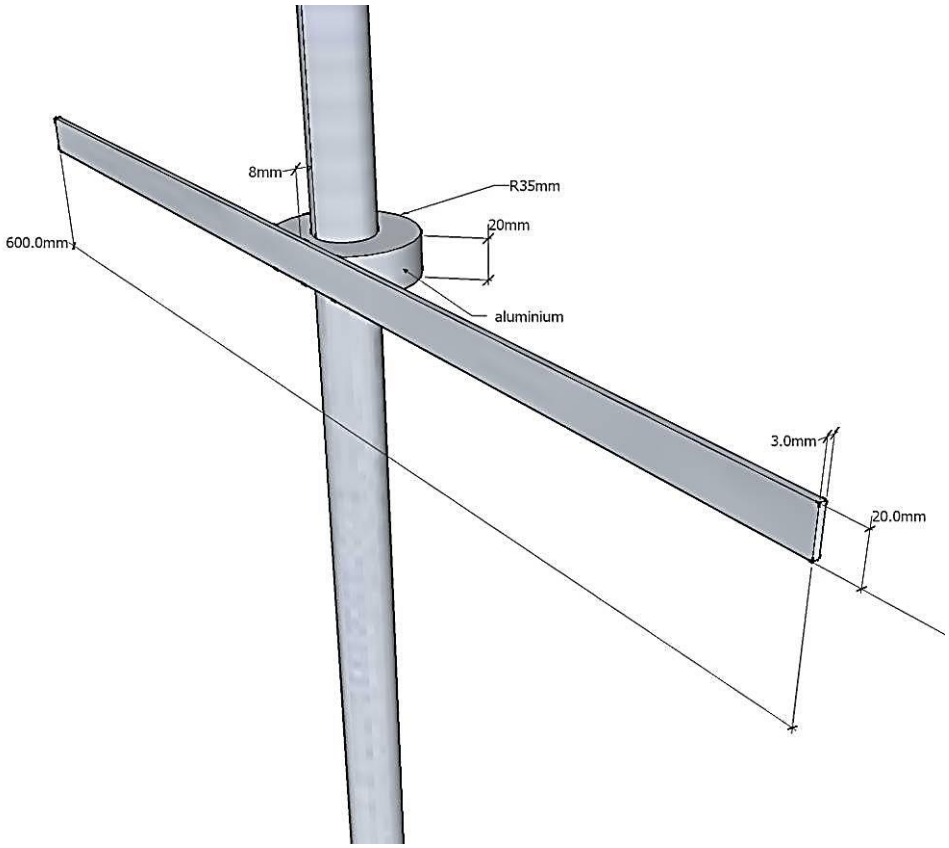

Figure 1-35. Detail of free field stand support bar.

1.2.6 Scattering Box - The scattering box was designed to provide a location where detectors would be exposed to radiation transmitted through thick shielding materials and radiation that may have undergone a small number of scattering events. Six of the concrete shield blocks, geometrically described in Sect. 1.2.3, were used to construct the scattering box. Figure 1-36 is a photograph from the front of the scattering box looking in, while Figure 1-37 is a photograph from the back. In Figure 1-37, SILENE is visible, surrounded by the steel reflector (dark blue on the lower left), which was not used in this experiment. Figure 1-38 through Figure 1-41 are drawings with dimensions of the scattering box stand. The scattering box stand is constructed of hollow S235JR steel tubes that are 10 cm × 5 cm, which are painted blue and have a wall thickness of 5 mm. Figure 1-41 illustrates the details of the vertical support bars holding the concrete blocks in place in Figure 1-36 and Figure 1-37. While the support bars are vertical in these two figures, the drawing in Figure 1-41 shows the bars laying horizontally.

ALARM-TRAN-PB-SHIELD-001

Figure 1-36. Front of scattering box (side nearest SILENE).

Figure 1-37. Back of scattering box.

ALARM-TRAN-PB-SHIELD-001

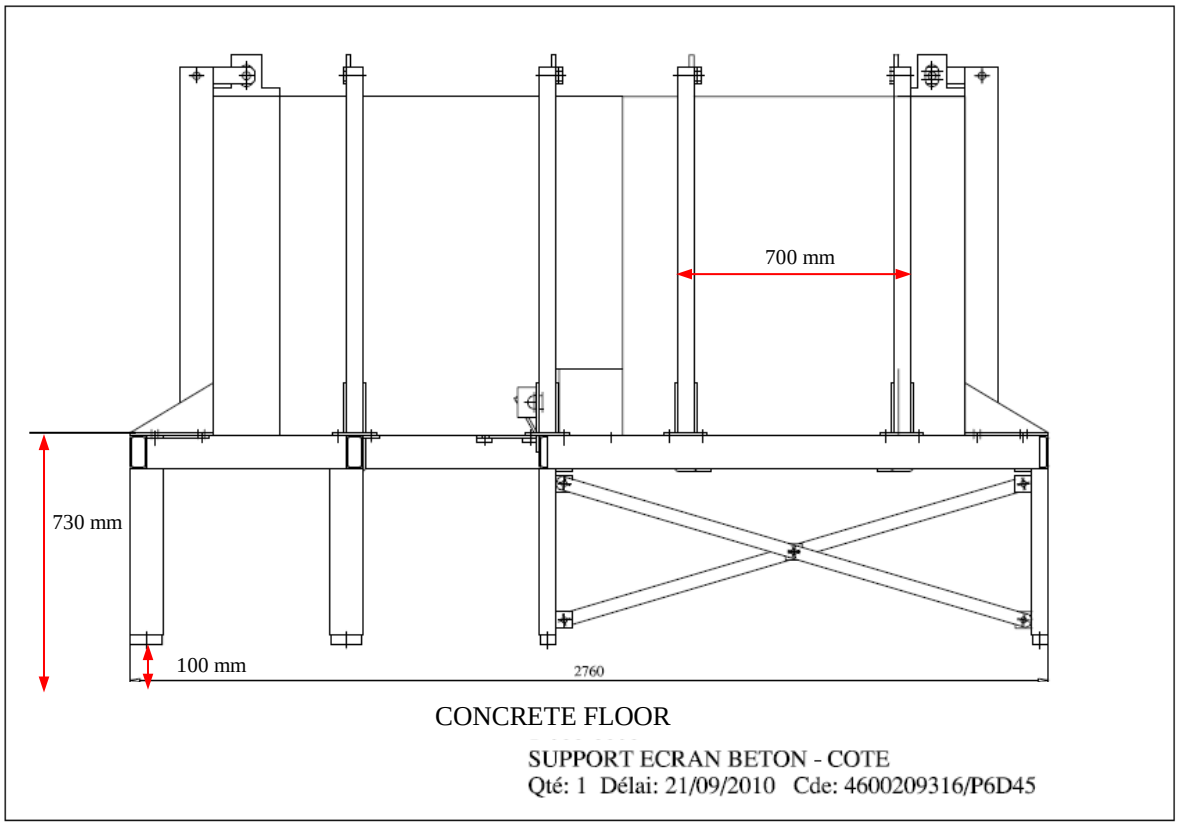

Figure 1-38. Elevation view of the scattering box from the front (dimensions in mm).

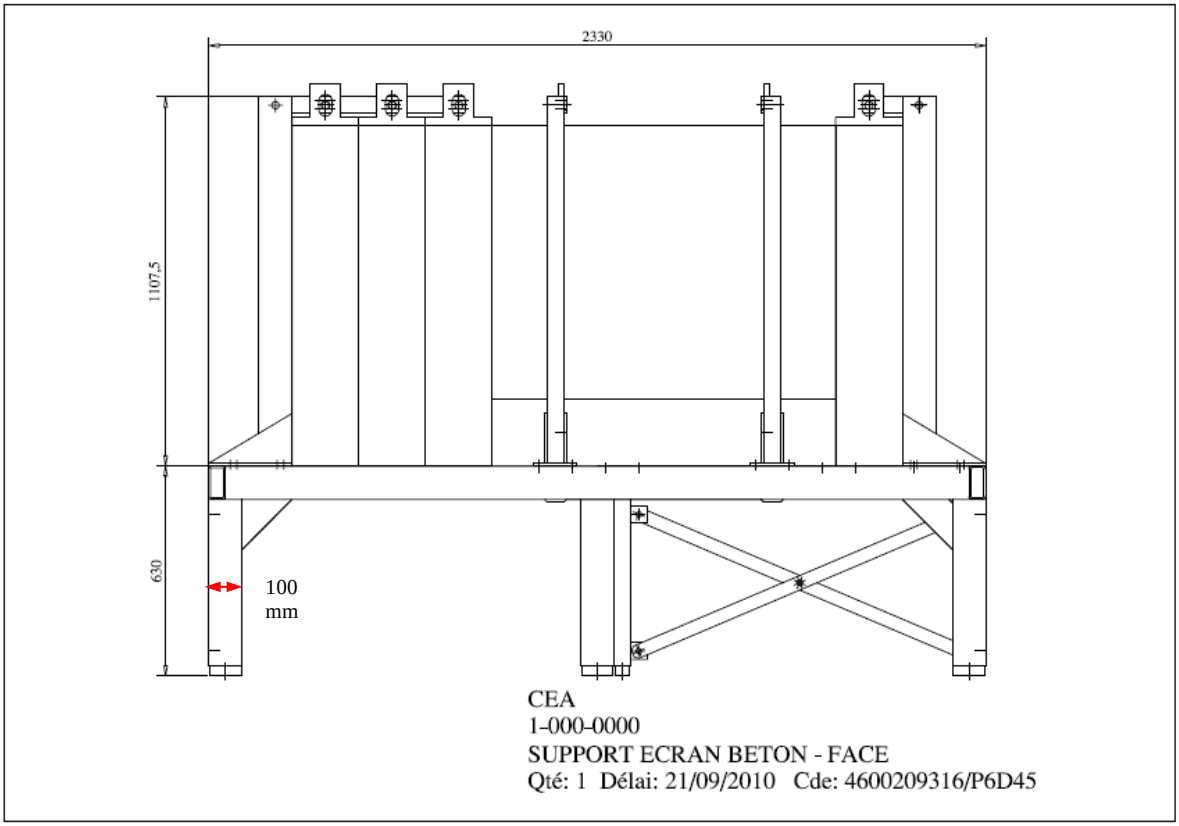

Figure 1-39. Elevation view of the scattering box from the side nearest the free field location (dimensions in mm).

Note that there are three vertical 20 cm thick concrete blocks on the front of the scattering box in this drawing, but this experiment never used more than one concrete block in this position.

ALARM-TRAN-PB-SHIELD-001

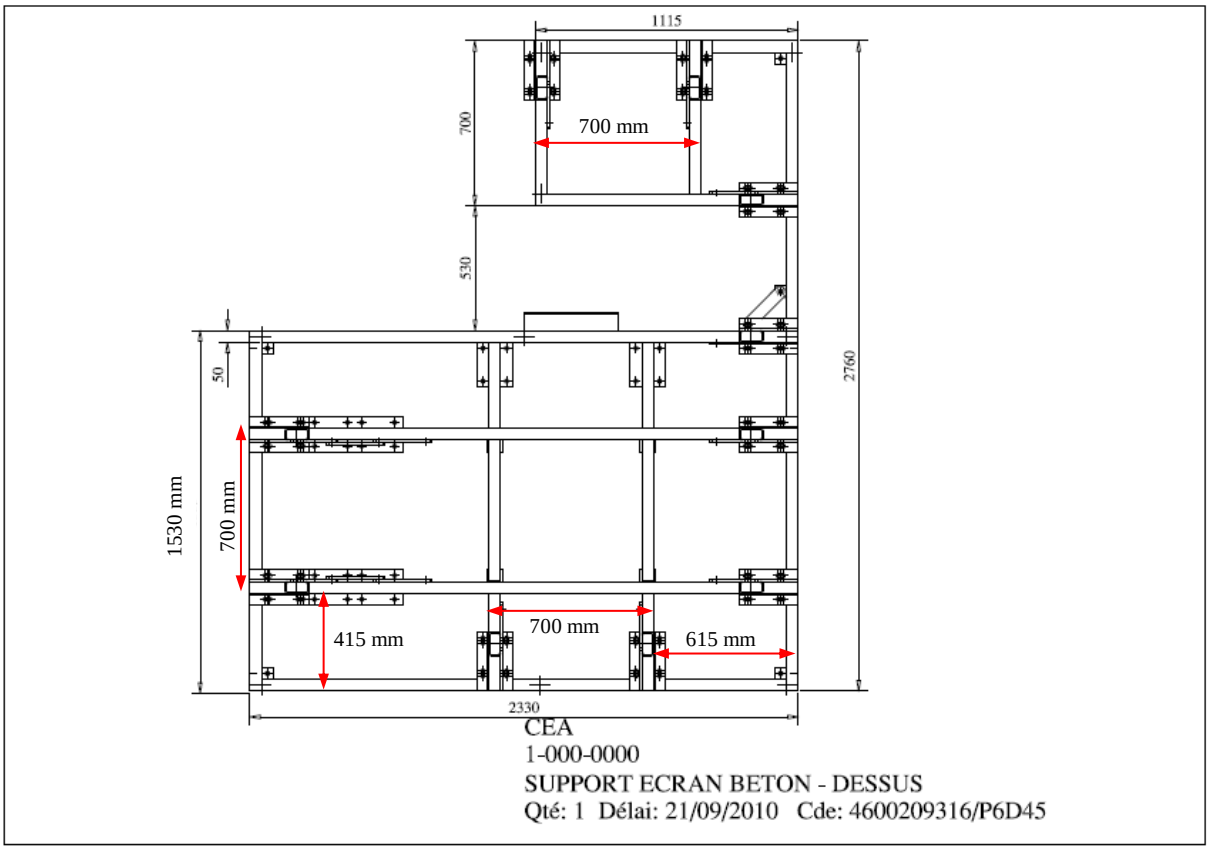

Figure 1-40. Plan view of scattering box (dimensions in mm).

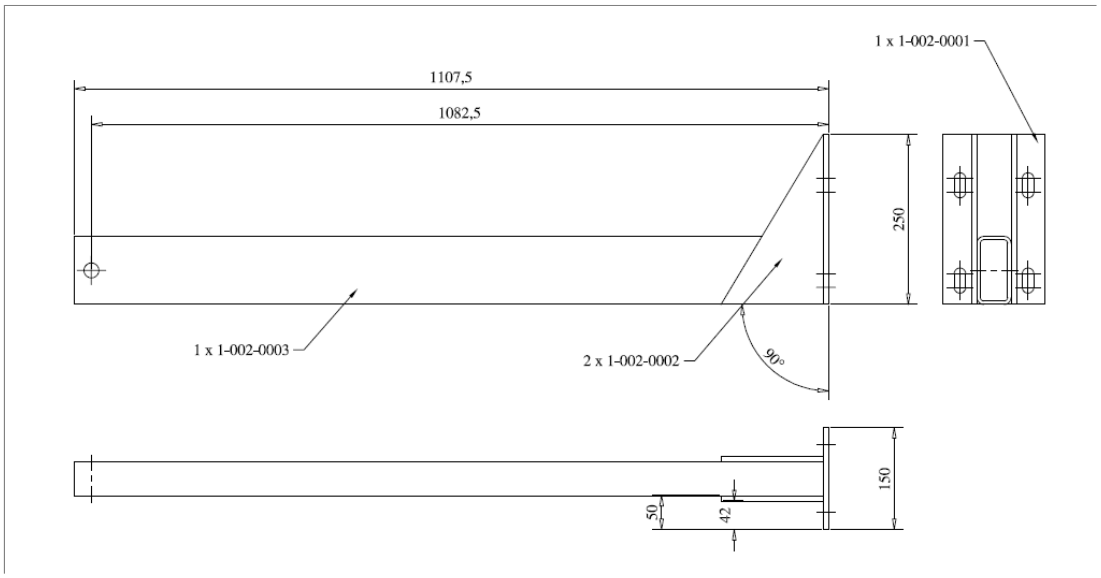

Figure 1-41. details of vertical support bars (dimensions in mm).

ALARM-TRAN-PB-SHIELD-001

Figure 1-42 and Figure 1-43 locate the scattering box and frame within the SILENE room, without the lead reflector / shield. In Figure 1-42 SILENE is represented by a red circle, and the distance from SILENE to the scattering box frame is measured from the lower portion of SILENE with a radius of 20 cm. The other dimensions in Figure 1-42 are measured from one of the 4 SILENE room concrete walls, or they are dimensions of the scattering box support stand.

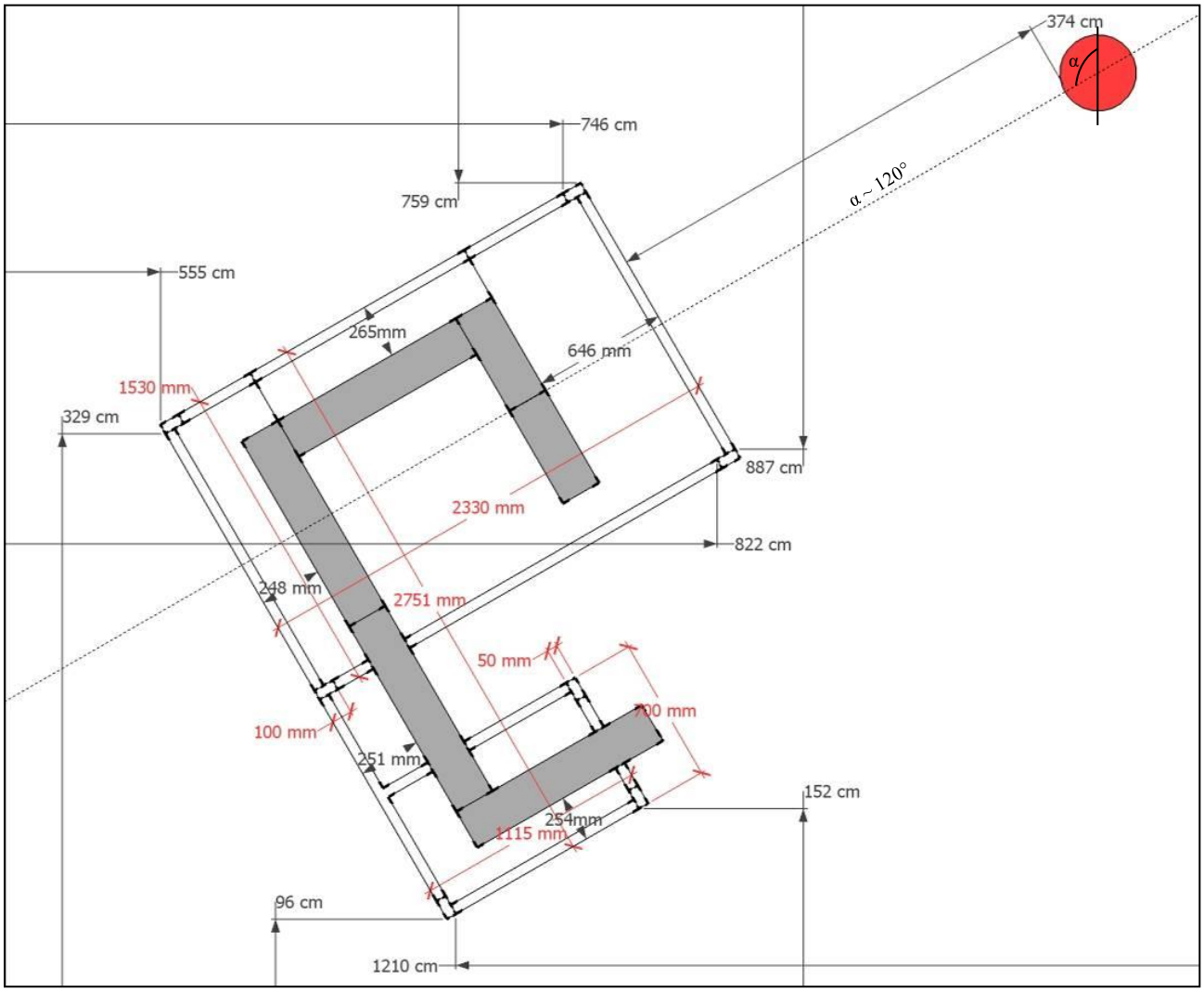

Figure 1-42. Location of scattering box and stand within SILENE room.

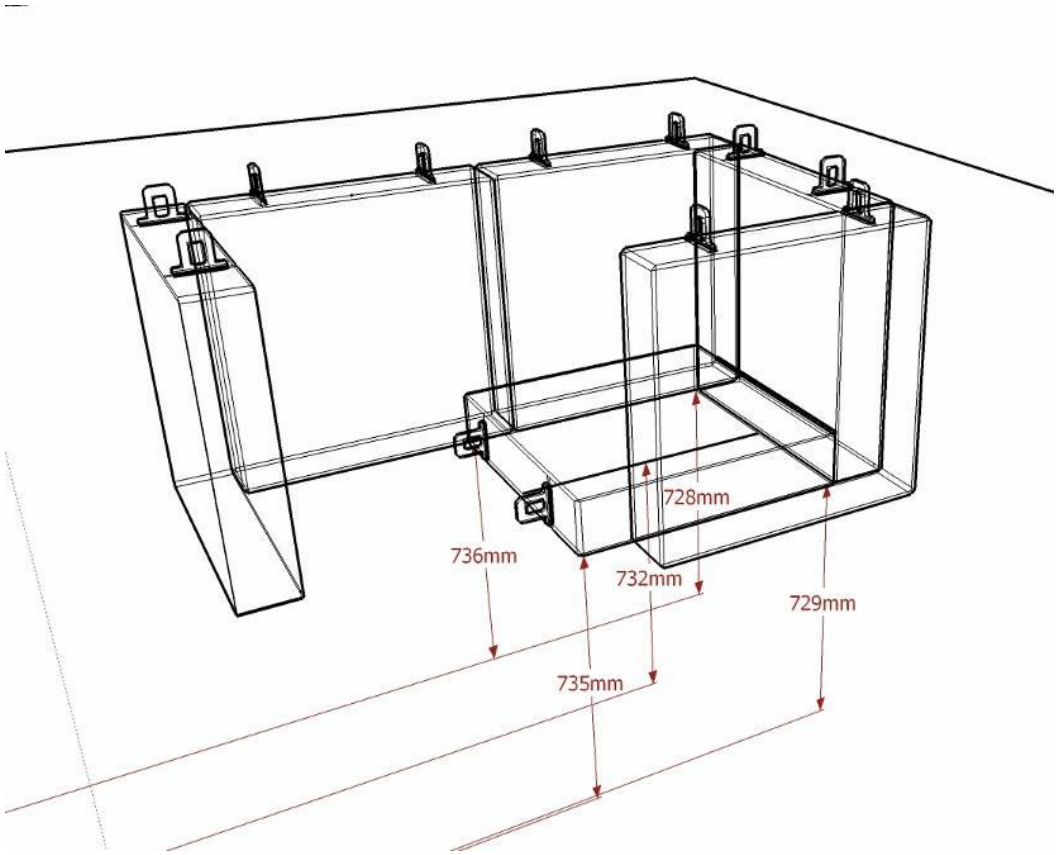

Figure 1-43. Height of scattering box above SILENE room floor.

When the concrete shielding blocks were placed on the support stand to construct the scattering box, the blocks did not fit together perfectly. An example of this is shown in the photograph in Figure 1-44. Figure 1-45 through Figure 1-47 provide measurements of these gaps around the scattering box, and they show the 6 different concrete blocks that are assigned names. These names are used through the remainder of this evaluation. Blocks S1 and S2 are made of magnetite concrete, while blocks S3 through S6 are made of standard concrete.

Figure 1-44. Gap between scattering box concrete blocks.

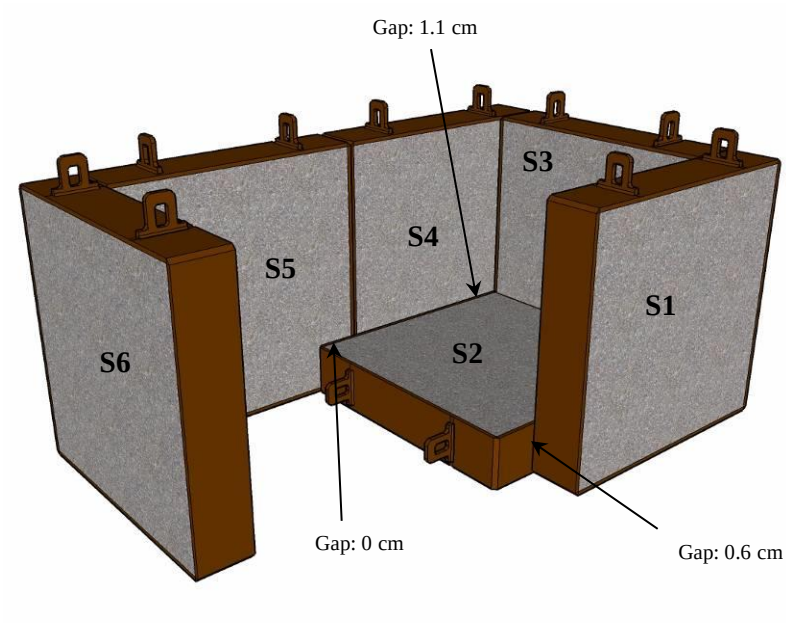

Figure 1-45. Front of the scattering box with block names; gap dimensions in cm.

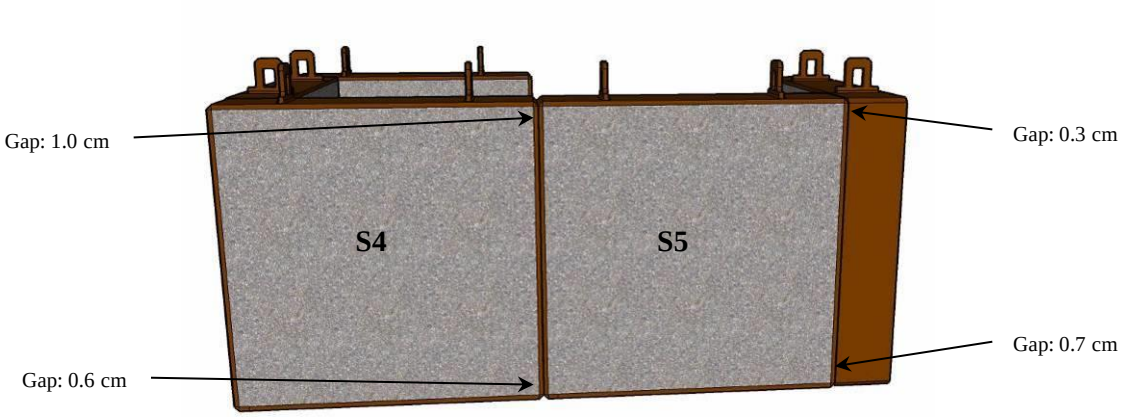

Figure 1-46. Back of scattering box with Block names; gap dimensions in cm.

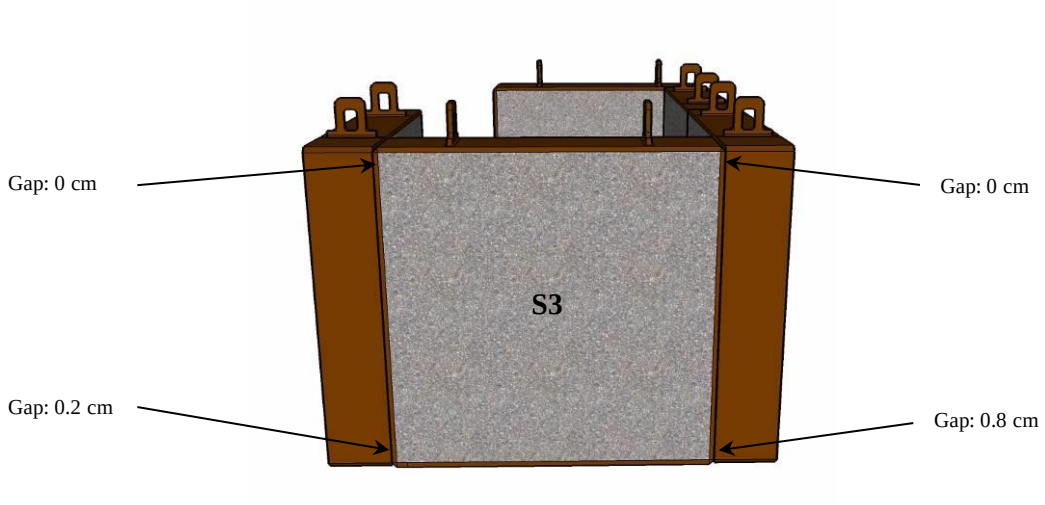

Figure 1-47. Drawing of side of scattering box with block names; gap dimensions in cm.

1.2.7 Scattering Box Detector Mounting Plate - Neutron activation foils and TLDs were placed at four positions within the scattering box, referred to as scattering box positions 1 through 4 (SB1–SB4). The neutron activation foils and TLDs were mounted using two aluminum plates at each of these positions. Figure 1-48 shows the dimensions of one of these plates, Figure 1-49 shows details about how the two plates were coupled together to support the detectors, and Figure 1-50 is a photograph illustrating how these two plates were mounted to the scattering box.

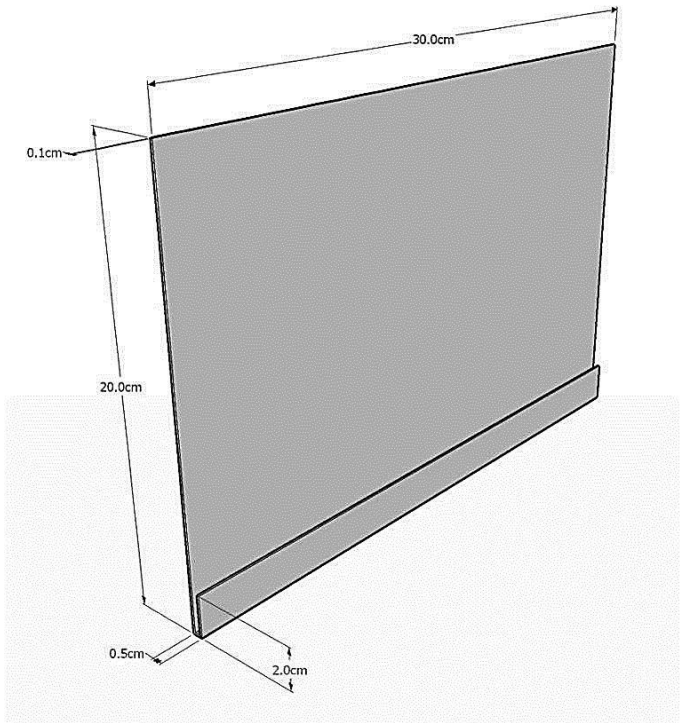

Figure 1-48. Scattering box aluminum mounting plate.

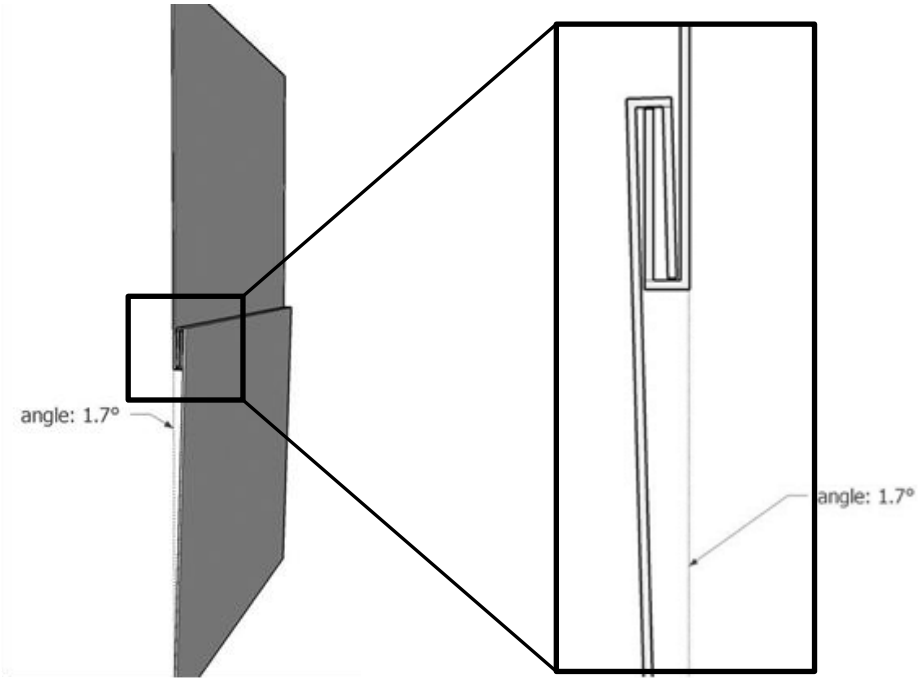

Figure 1-49. Details of scattering box aluminum mounting plates.

Figure 1-50. Plates mounted in the scattering box.

1.2.8 SILENE Diagnostics - As shown in the photographs of the SILENE room and Figure 1-1 there is a lot of equipment in the room (aside from the critical assembly, collimators, scattering box, and free field stand) that is not described in this evaluation. This equipment does not have any direct involvement with generating the critical pulse or measuring the radiation field produced, and it is believed that most of this equipment will have a negligible impact on the neutron activation foil and TLD measurements. One possible exception is the diagnostic detectors housed in large cylinders of polyethylene across the room from collimators A and B, relatively close to the free field location. These diagnostics are not illustrated in the overview Figure 1-2, and are just out of view to the left of Figure 1-1. A photograph of these diagnostics and their stands is shown in Figure 1-51. The polyethylene cylinders sit on top of a S235JR steel pedestal, which are both on top of a S235JR steel table. Dimensions in cm are given in Figure 1-52, and Figure 1-53 locates the diagnostics within the SILENE room.

Figure 1-51. Detector diagnostics and stands.

ALARM-TRAN-PB-SHIELD-001

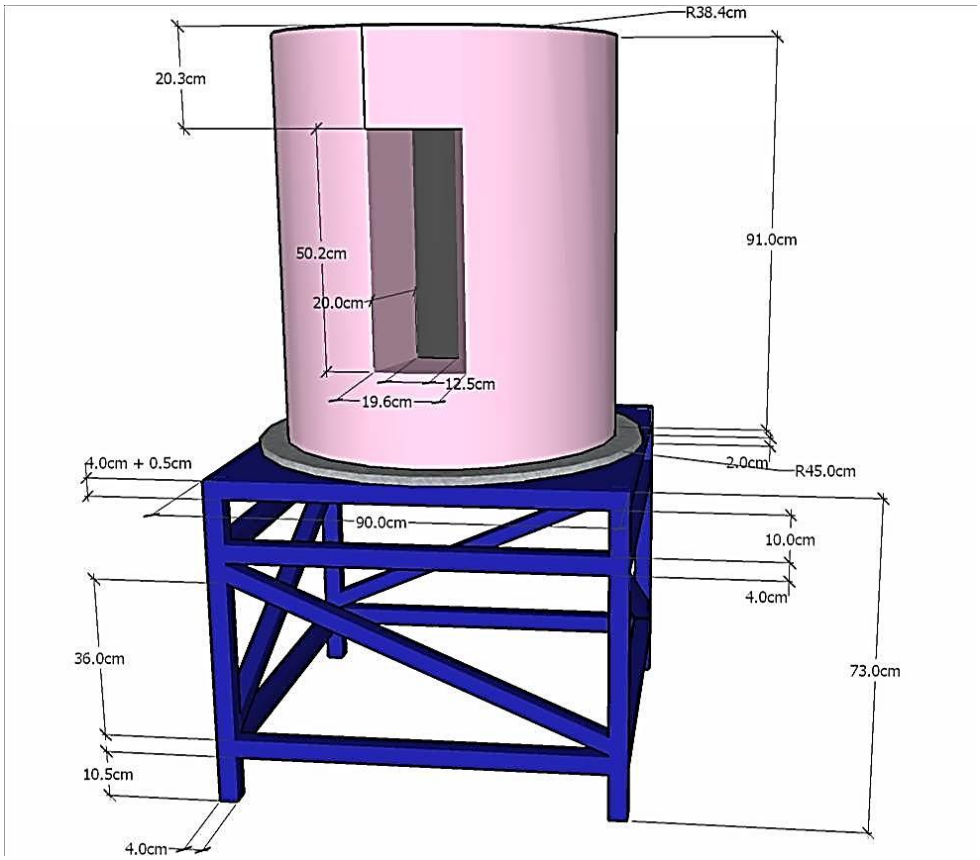

Figure 1-52. Dimensions in cm of detector diagnostics and stands.

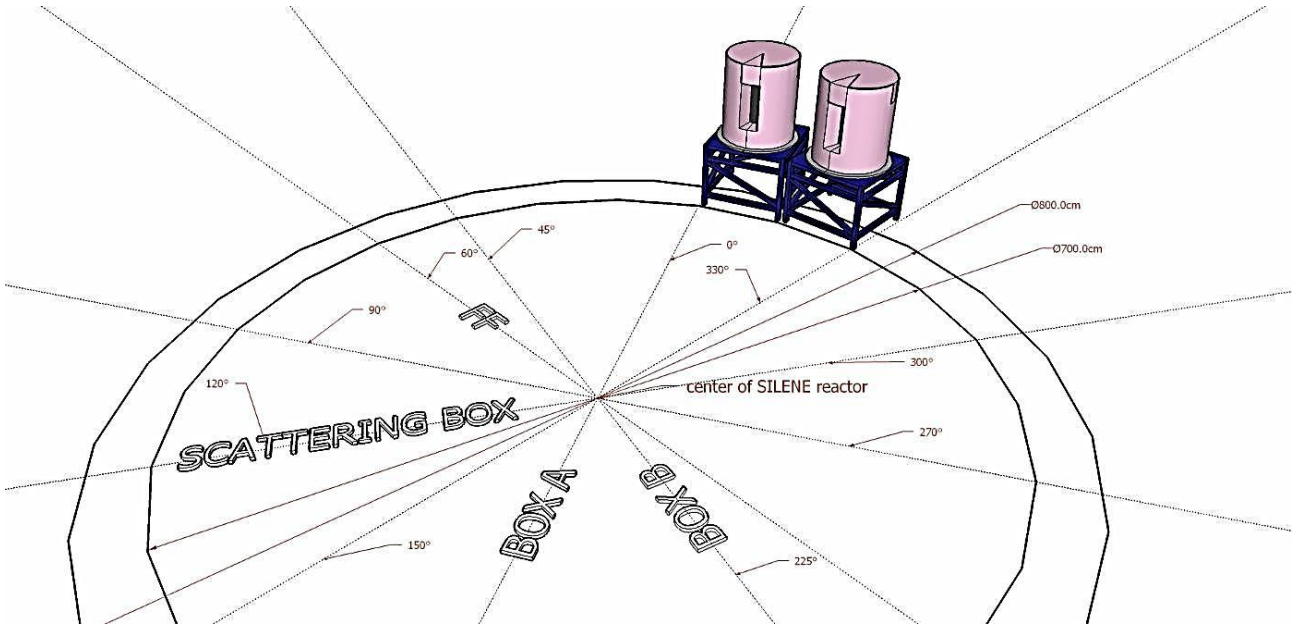

Figure 1-53. Location of detector diagnostics and stands within SILENE room.

1.3 Description of Material Data

The following subsections provide details about the materials used in these experiments. Due to the importance of the source (SILENE critical assembly) and detectors (neutron activation foils and TLDs) in shielding benchmarks, these items are discussed in Sections 1.4 and 1.5, respectively.

1.3.1 SILENE Room – The concrete used to construct the walls of the SILENE room are referred to as *SILENE concrete* for the remainder of this evaluation. The composition used for the SILENE concrete is given in Table 1-1. Valduc provided this composition, which is also published in Table 8.3.3 of the OECD NEA report 6285 published in 2009.[a] However, in that report, the composition is provided as elemental number densities, with 4 significant figures (3 after the decimal point). Table 1-1 provides the composition using weight percent with enough significant figures to reproduce the values in NEA report 6285. The evaluators note that it is not unusual that the SILENE concrete is borated because it is being used as a neutron shield. However, it seems unusual that the SILENE concrete only contains ^{10}B and no ^{11}B. The Valduc staff members stated that this boron content was added to represent all possible trace thermal neutron absorbers present in the concrete and that the amount of boron added is based upon comparisons of many experimentally measured values and simulated values. Furthermore, ^{11}B was not added as an additional indication that the ^{10}B content has been estimated and not measured. This is sometime referred to as the ^{10}B equivalent.

Table 1-1. SILENE concrete composition

Element	Weight percent
H	0.721398
^{10}B	0.001109
O	48.094243
Al	2.916255
Si	27.520212
Ca	17.803744
Fe	2.943039
Density	2.401318 g/cm^3

No measurement of the temperature, pressure, or humidity was made within the SILENE room during the experiments.

There are two sets of doors accessing the SILENE room: the outer concrete shield doors and the inner steel access doors. The outer concrete doors are made of SILENE concrete, Table 1-1, while the inner steel doors are made of a low carbon structural steel, S235JR. The composition of S235JR steel, according to the European Standard EN 10027-1, is given in Table 1-2.

[a] Y. Miyoshi, et. al., "Inter-code Comparison Exercise for Criticality Excursion Analysis - Benchmark Phase I: Pulse Mode Experiments with Uranyl Nitrate Solution in the TRACY and SILENE Facilities," OECD NEA No. 6285 (2009).

Table 1-2. Standard composition of S235JR steel

Element	Weight percent
C	≤ 0.17
N	≤ 0.012
P	≤ 0.035
S	≤ 0.035
Mn	≤ 1.4
Fe	Balance
Cu	≤ 0.55
Density	7.85 g/cm^3

1.3.2 Collimator Boxes – The stands that support the two collimator boxes (blue in Figure 1-9) are made of S235JR steel as specified in Table 1-2. The layers of materials forming the collimator boxes from the outside to the inner cavity, including the support bar and small stand in Figure 1-18 and Figure 1-19, are stainless steel Z2 CN 18-10, PPB9, lead, copper, and stainless steel Z2 CN 18-10. Table 1-3 provides the composition of the stainless steel Z2 CN 18-10 used to construct the collimators. The equivalent US name for this material is *stainless steel 304L*. Note that this type of stainless steel is used throughout this experiment, and that this composition (analysis) only applies to the collimators. A copy of the analysis of the collimator box stainless steel Z2 CN 18-10 provided by Saclay is in Appendix H.

Table 1-3. Composition of Z2 CN 18-10 stainless steel for the collimator boxes

Element	Weight percent
C	0.02
N	0.049
Si	0.04
P	0.031
S	0.002
Cr	18.3
Mn	1.63
Fe	Balance
Ni	8.1
Density	7.7841 g/cm^3

PPB9 is a borated gypsum plaster (also known as plaster of Paris) that contains polyethylene granules or beads. The plaster is borated by the addition of the mineral colemanite. The composition of this material is given in Table 1-4, but the values in Table 1-4 warrant some explanation. The weight percentages reported with 2 significant figures beyond the decimal point (e.g., 8.08% hydrogen) were reported by the manufacturer, along with an “other” category. The manufacturer also reported the composition of the colemanite in the mixture. The composition of the colemanite was used to calculate the weight percentage of some of the minor elements the manufacturer had not reported on (4 significant figures beyond the decimal point), which results in a smaller “other” weight percentage in Table 1-4 than that reported by the manufacturer. A copy of the analysis of PPB9 provided by Valduc is in Appendix H.

Table 1-4. PPB9 Composition after drying

Element	Weight percent
H	8.08
B	1.13
C	40.92
O	29.15
Mg	0.2532
Al	0.2222
Si	0.3489
S	7.98
K	0.0077
Ca	11.45
Sr	0.1578
Other	0.3002
Density	1.03 g/cm^3

1.3.3 Collimator B Shielding – The shield in front of collimator B in this experiment is made of standard concrete. The result of a chemical analysis performed by LERM for this concrete is given in Table 1-5. No oxygen is listed in the analysis results, so it is assumed that oxygen would make up the balance of this composition. The density in Table 1-5 was measured by Soutrenon using a sample of concrete from the same batch, not the actual concrete shield block. The frame and lift points of this concrete shield are made of S235JR, as noted in Table 1-2. Copies of the data provided by LERM and Soutrenon are included in Appendix H.

Table 1-5. Standard concrete composition according to LERM analysis and density according to the manufacturer Soutrenon

Element	Weight percent
H	0.64
B	< 0.1
C	0.62
O	Unreported
Na	1.57
Mg	0.75
Al	6.04
Si	27.02
P	0.10
Cl	< 0.01
K	3.32
Ca	8.67
Ti	0.23
Cr	0.01
Mn	0.04
Fe	1.99
Sr	0.03
Density	2.30 g/cm^3

1.3.4 Foil Holders – The neutron activation foils inside the collimator boxes and at the free field location are inside the foil holder in Figure 1-28. This holder is made of aluminum alloy AG3M; the standard composition for AG3M is provided in Table 1-6.

Table 1-6. Standard composition of AG3M aluminum

Element	Weight percent (%)
Mg	2.6–3.6
Al	Balance
Si	≤ 0.4
Ti	≤ 0.15
Cr	≤ 0.3
Mn	≤ 0.5
Fe	≤ 0.4
Cu	≤ 0.1
Zn	≤ 0.2
Density	2.685 g/cm^3

1.3.5 Free Field Location – No information is available about the exact compositions of the free field location stand.

1.3.6 Scattering Box – The stand that supports the scattering box (Figure 1-36 and Figure 1-37) is made of S235JR steel, like the collimator boxes. This composition is defined in Table 1-2. The concrete shield blocks used to construct the scattering box are the same as the one shielding collimator B, except that the concrete composition is different. The results of a chemical analysis performed by LERM on the magnetite and standard concrete used to construct the scattering box are presented in Table 1-7 and Table 1-5, respectively. As with the standard concrete shielding collimator B, no results for oxygen were reported, so the balance of the composition is assumed to be oxygen. The density in Table 1-7 was measured by Soutrenon using a sample of concrete from the same batch, not the actual concrete shield block. Copies of the data provided by LERM and Soutrenon are included in Appendix H.

Table 1-7. Magnetite concrete composition according to LERM analysis and density according to the manufacturer Soutrenon

Element	Weight percent
H	0.32
B	< 0.1
C	0.36
O	Unreported
Na	0.22
Mg	0.56
Al	0.52
Si	2.72
P	0.45
Cl	< 0.01
K	0.28
Ca	5.79
Ti	0.17
Cr	0.03
Mn	0.18
Fe	54.94
Sr	0.02
Density	3.90 g/cm^3

1.3.7 Scattering Box Detector Mounting Plate – No chemical analysis has been performed on the detector mounting plates within the scattering box.

1.3.8 SILENE Diagnostics – The exact composition of the polyethylene moderator surrounding each SILENE diagnostic detector is unknown. These cylindrical moderators sit atop a small steel pedestal and steel table. The table is known to be S235JR steel (Table 1-2). The composition of the small pedestal is unknown.

1.4 Description of the Source

The source of primary neutrons and photons in this experiment is the critical pulse produced by the SILENE assembly. This section provides the necessary geometric and material information about the source, SILENE. This is a simplified description of the actual assembly, which helps reduce the effort required to model the assembly. The intensity of the source is discussed in Section 1.7 as one of the measured values of this experiment. The spatial and energy dependence of the source is discussed in Section 4.0; these were not measured, so they must be calculated as part of this benchmark.

1.4.1 SILENE Dimensions – The SILENE critical assembly is an annulus (concentric cylinders). The inner cylinder is a central void where the control rod is located. The cadmium control rod is an annulus as well. The outer cylinder of SILENE is broken into upper and lower portions, each of which has a different outside radius. The upper portion of this outer cylinder is where the uranyl nitrate solution is located during all experiments. Two plates of steel form a short pedestal that slightly lifts SILENE off the concrete floor of the experiment room. The first of these rests directly on the concrete floor and is not cylindrical but is rectangular. On top of this is a cylindrical plate of steel. Figure 1-54 is a photograph of SILENE without any reflector, and Figure 1-55 illustrates the dimensions and materials of the simplified description of SILENE.

Figure 1-54. SILENE without the lead reflector.

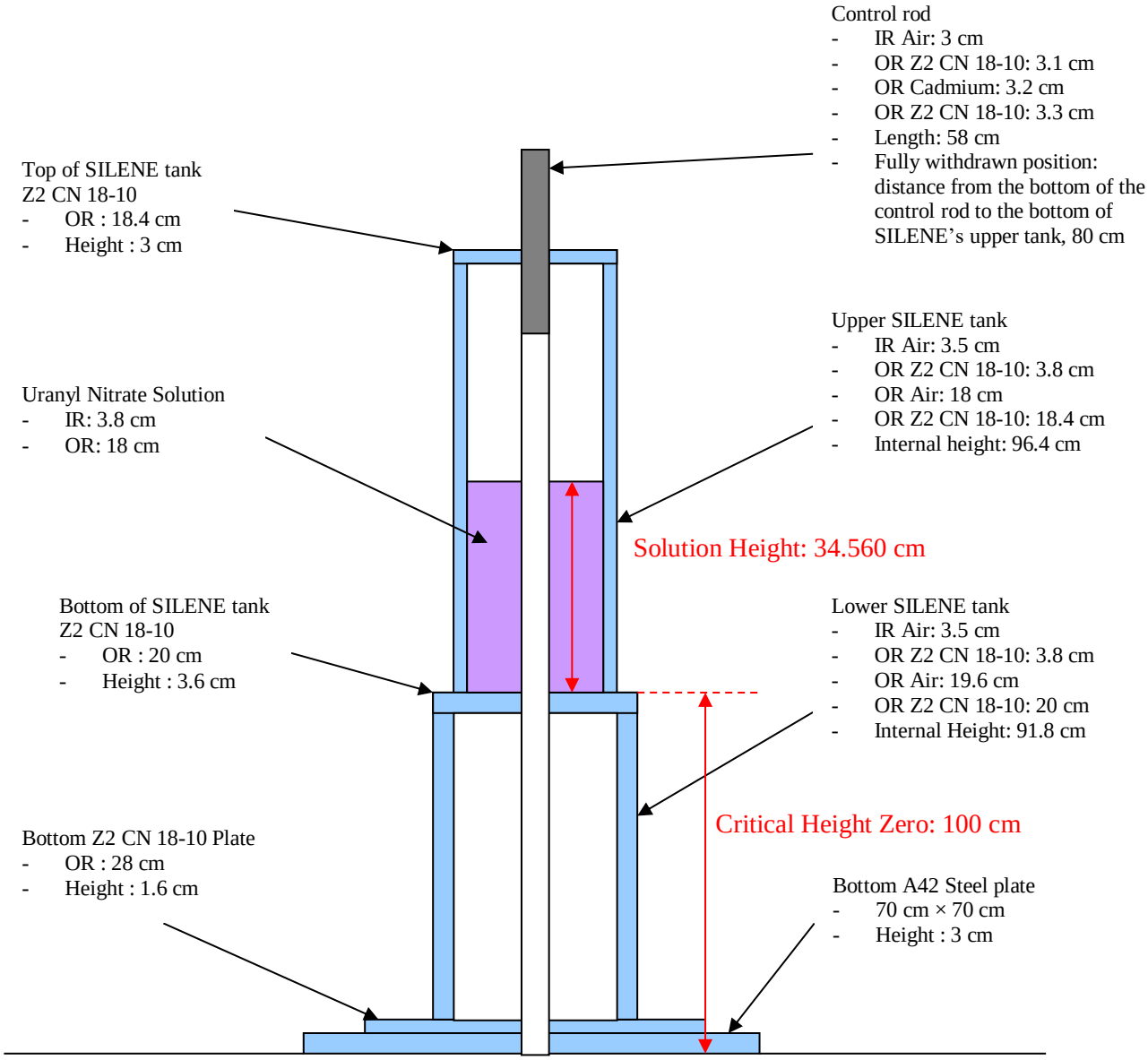

Figure 1-55. Simplified SILENE geometry.

The lower lead ring, which is not shown in Figure 1-55, is the orange material visible in Figure 1-1 and Figure 1-54, and is part of the lead reflector. It can be seen in more detail in Figure 1-56. The lower lead ring will be described here because it is not a continuous piece of material that completely surrounds SILENE and because it is often left in place when SILENE is bare. The bottom of the lower lead ring is 58.5 cm above the concrete floor. Figure 1-56 also shows the length of the curves that form the inner and outer radius of the lower lead ring, 21 and 42 cm, respectively. As discussed above, collimator A sits approximately on the 180° line of the SILENE room (Figure 1-2 and Figure 1-53), which is used to mark the orientation of the lower lead ring in Figure 1-56.

Internal diameter: 404 mm
External diameter: 604 mm
Height: 100 mm
Height Above Floor: 585 mm

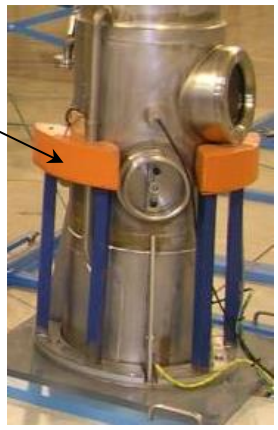

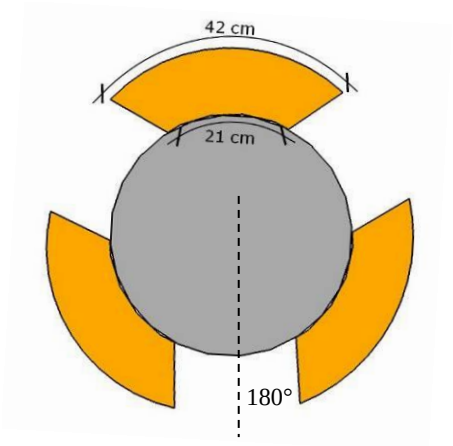

Figure 1-56. SILENE lower lead ring.

1.4.2 Lead Reflector Dimensions– The lead reflector is an annulus that surrounds SILENE. Two pictures of the lead reflector are shown in Figure 1-57. The picture on the left shows the lead reflector installed and surrounding SILENE and the picture on the right shows half of the lead reflector waiting to be installed around SILENE. The dimensions of the lead reflector surrounding SILENE are shown in Figure 1-58 and Figure 1-59.

Figure 1-57. SILENE lead reflector/shield.

ALARM-TRAN-PB-SHIELD-001

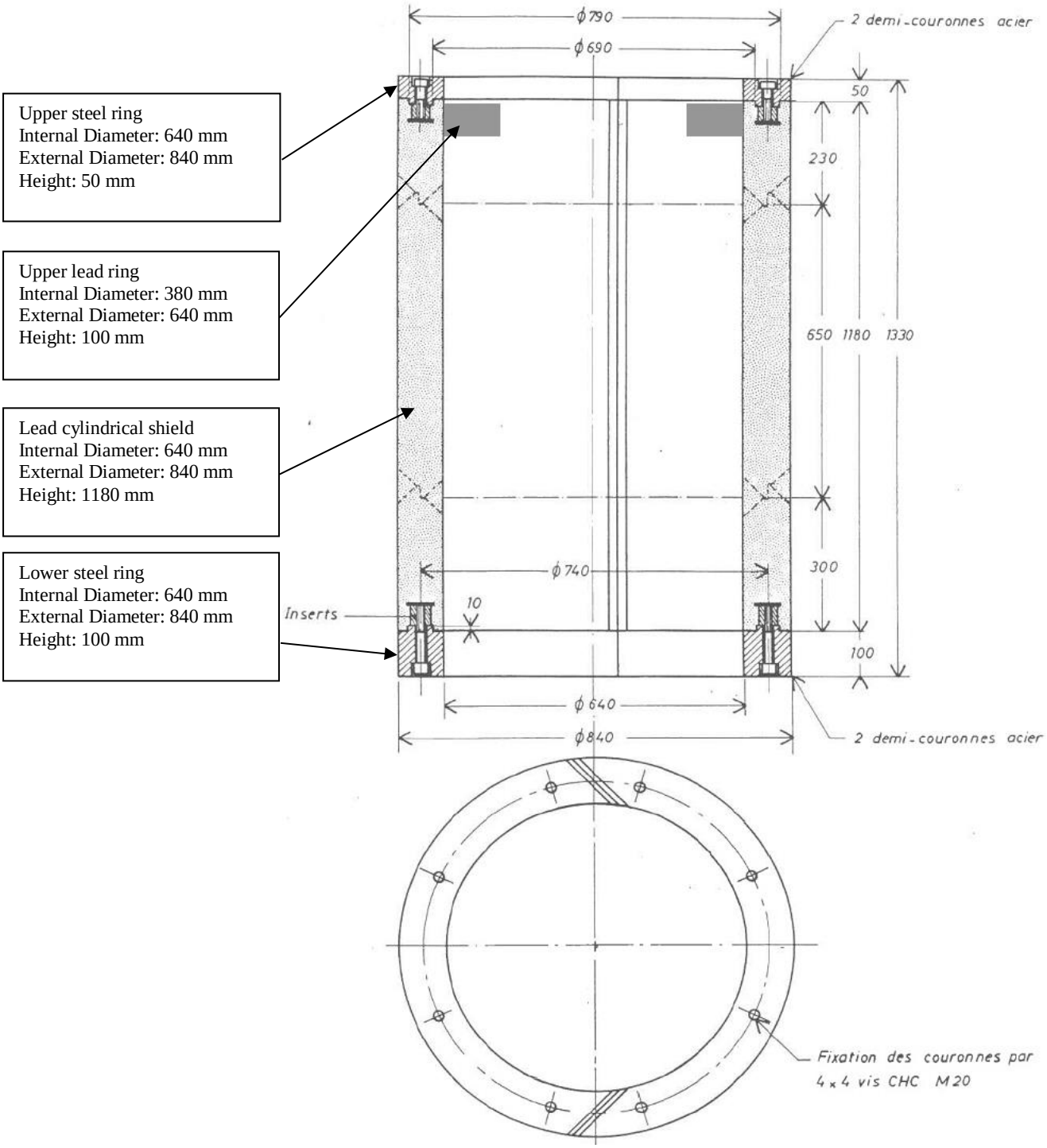

Figure 1-58. SILENE Lead reflector dimensions in mm.

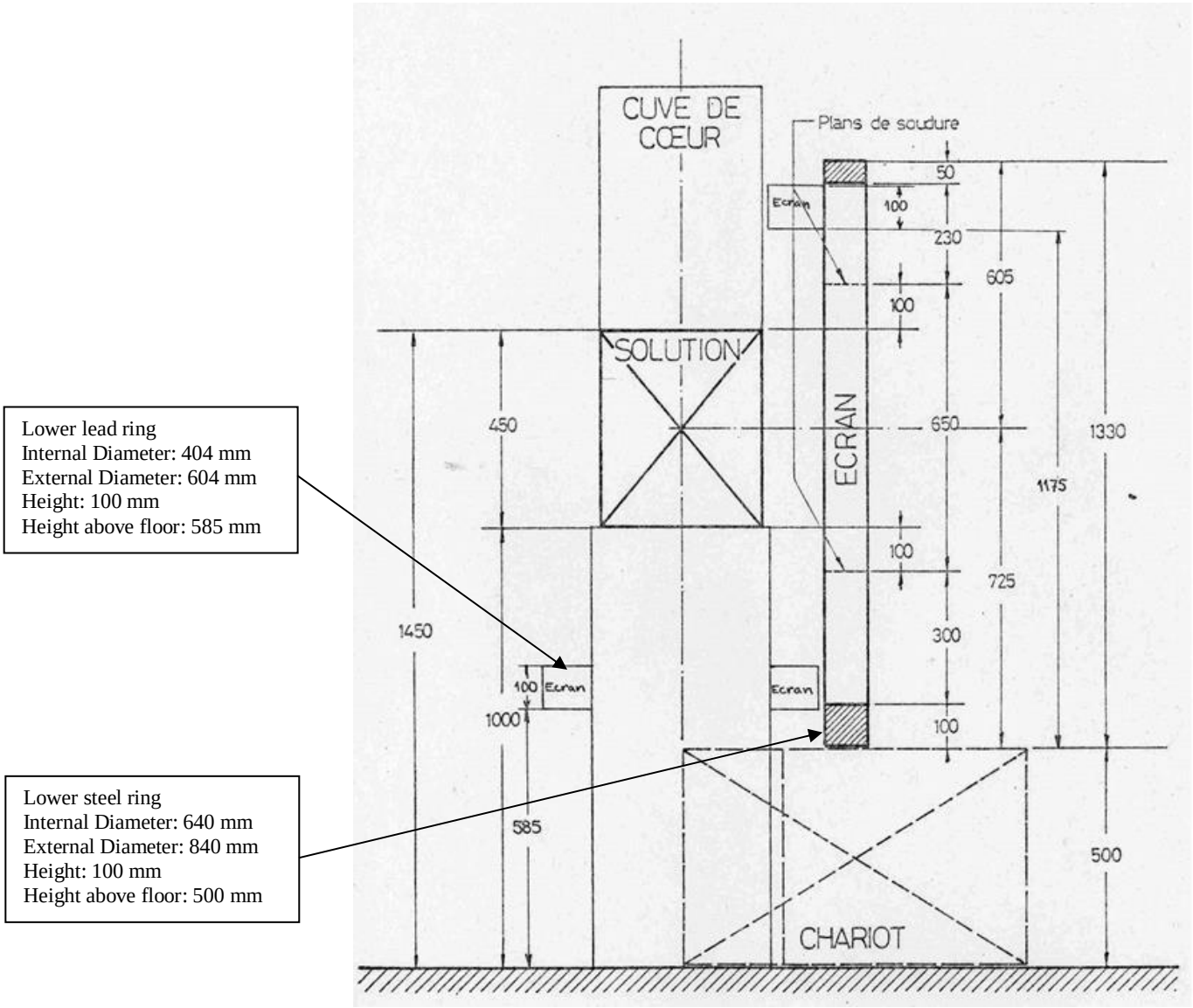

Figure 1-59. SILENE lead reflector and lower lead ring positions above the floor in mm.

1.4.3 SILENE and Lead Reflector Materials– Figure 1-55 identifies the dimensions and materials used to construct the SILENE assembly. The majority of the reactor is made of Z2 CN 18-10 stainless steel. The standard composition of Z2 CN 18-10 stainless steel is given in Table 1-8. This is the composition of Z2 CN 18-10 stainless steel that will be used throughout this benchmark except for the collimator boxes.

Table 1-8. Standard composition of Z2 CN 18-10 stainless steel

Element	Weight percent
C	≤ 0.03
Si	≤ 1
P	≤ 0.04
S	≤ 0.03
Cr	17 -19
Mn	≤ 2
Fe	Balance
Ni	9-11
Density	7.9 g/cm^3

The square steel plate that rests directly on the concrete floor of the room and supports the SILENE assembly is made of A42 steel. The standard composition of A42 steel is given in Table 1-9.

Table 1-9. Standard composition of A42 steel

Element	Weight percent
C	≤ 0.25
N	≤ 0.009
P	≤ 0.062
S	≤ 0.062
Fe	Balance
Density	7.85 g/cm^3

An analysis of the lead reflector composition, including the lower lead ring, has not been performed explicitly. However, analysis of similar high purity lead used in other experiments at Valduc is shown in Table 1-10.

Table 1-10. Analysis of Valduc high purity lead

Element	Sample A (ppm)	Sample B (ppm)
B	< 0.005	< 0.005
Mg	< 0.005	< 0.005
Al	0.04	0.12
Ca	< 0.01	< 0.01
Ti	< 0.005	< 0.005
V	< 0.001	< 0.001
Cr	< 0.005	0.03
Mn	< 0.001	< 0.001
Fe	0.25	0.32
Co	< 0.005	< 0.005
Ni	0.71	0.80
Cu	5.0	2.7
Zn	< 0.01	< 0.01
As	< 0.005	< 0.005
Zr	< 0.005	< 0.005
Mo	< 0.005	< 0.005
Ag	12	18
Cd	< 0.05	< 0.05
Sn	< 0.05	< 0.05
Sb	0.07	0.14
Ba	< 0.005	< 0.005
Bi	170	240
Pb	Balance	Balance
Density	11.19 g/cm^3	

In Figure 1-58 and Figure 1-59 two portions of steel can be seen, the lower and upper steel rings. This steel is located where screws have been used to hold the lead reflector together and is identified as XC18 steel. The composition of XC18 steel is given in Table 1-11.

Table 1-11. Composition of XC18 steel

Element	Weight percent
C	0.17
Si	0.15
P	0.016
S	0.024
Mn	0.61
Fe	99.03
Density	7.87 g/cm^3

1.4.4 Uranyl Nitrate Solution – The fuel used in the SILENE reactor is a uranyl nitrate solution often presented as being enriched up to 93.5 weight percent ^{235}U. The result of a finer analysis of the uranium isotopic composition performed in 1999 is shown in Table 1-12. A copy of the report provided by Valduc concerning the fuel enrichment is provided in Appendix H. Note that this report in 1999 was produced the last time the uranyl nitrate solution was reprocessed, therefore the actual uranium atom percentages in this experiment are different from those in Table 1-12. Also, during the experiment additional fission products and daughters of fission products are produced in the solution.

Table 1-12. Isotopic composition of uranyl nitrate solution in 1999

Element	Atom percent	Uncertainty
^{234}U	0.5891	0.001
^{235}U	92.6857	0.020
^{236}U	0.2519	0.001
^{238}U	6.4733	0.005

Before this experiment was conducted, an analysis of the uranyl nitrate solution was performed to determine the uranium concentration, density, and molarity of the solution. The results of the analysis performed on September 8, 2010, are presented in Table 1-13. A copy of the report provided by Valduc concerning the analysis of the uranyl nitrate solution is provided in Appendix H.

Table 1-13. Results of the September 8, 2010 uranyl nitrate solution analysis

Measurement	Results ±σ
Density	1.15624 g/cm^3 ± 0.00003
Uranium concentration	70.36 g/L ± 0.05
H^+ Molarity	1.91 moles/L ± 0.03
NO_3^- Molarity	2.51 moles/L ± 0.03

A few other experiments were performed with the SILENE assembly between September 6, 2010 (the date the sample in Table 1-13 was taken to be analyzed) and October 13, 2010, so it is likely that the parameters reported in Table 1-13 had changed by the time of this experiment. Regulations governing the operation of SILENE require that the uranium concentration of the solution used in experiments be 71 g/L ± 1 g/L. Therefore, the SILENE operators occasionally check the uranium concentration of the solution using what they call a *volume measurement technique*, and the fuel concentration is adjusted by adding fuel solution or nitric acid to increase or decrease the uranium concentration. The results of such a check performed on October 18, 2010 reported a uranium concentration of 70.96 g/L.

1.5 Description of the Detectors

Several types of detectors were used during this experiment. For the purposes of this benchmark, only the neutron activation foils and TLDs will be considered because these are the detector types that measured benchmark quality data. A summary of the performance of the CIDAS MkX and Rocky Flats NCD-91 CAAS detectors is presented in Appendix G.

1.5.1 Neutron Activation Foil Dimensions – Table 1-14 presents the dimensions and masses of each neutron activation foil used in this experiment. Regarding diameter, all the foils with *A10* in the reference name have a manufacturing tolerance of 0.2 mm on their diameters, and all other foils have a diameter tolerance of 0.5 mm. Regarding thickness, every foil presented in Table 1-14 has a 10% manufacturing tolerance on its thickness. These tolerances on foil dimensions produce larger uncertainties than the uncertainties associated with measurements by a micrometer. The experimentalist and evaluators recognize that more care should have been taken to reduce these dimension uncertainties for the foils with thermal neutron activation products. The uncertainty of the masses reported in Table 1-14 is 0.2 %. In Table 1-14, no mass is reported for any titanium foil because no activation products in the titanium foils were measured as part of this benchmark, so no mass measurement was performed. The analysis column in Table 1-14 identifies which chemical analysis in Section 1.5.2 applies to each foil.

Table 1-14. Dimensions and masses of neutron activation foils

Location	Reference name	Thickness (mm)	Diameter (mm)	Mass (g)	Analysis
Case 1 collimator A	Au06-A10	0.25	20	1.546	Goodfellow [2]
	Ni014	2	20	5.795	FILAB [4]
	In10-A10	1	20	2.451	Goodfellow [3]
	Fe025	3	20	7.291	FILAB [2]
	Mg002	2	20	1.090	FILAB [6]
	Co021	2	20	5.807	FILAB [5]
	Ti	2	20	---	---
Case 2 collimator B	Au04-A10	0.25	20	1.534	Goodfellow [2]
	Ni023	2	20	5.785	FILAB [4]
	In11-A10	1	20	2.492	Goodfellow [3]
	Fe033	3	20	7.301	FILAB [2]
	Mg035	2	20	1.088	FILAB [6]
	Co012	2	20	5.793	FILAB [5]
	Ti	2	20	---	---
Case 3 free field	Au02-A10	0.25	20	1.558	Goodfellow [2]
	Ni012	1	20	2.829	FILAB [3]
	In004	1	20	2.323	FILAB [1]
	Fe019	3	20	7.284	FILAB [2]
	Mg026	2	20	1.093	FILAB [6]
	Co015	2	20	5.801	FILAB [5]
	Ti	2	20	---	---
Case 4 scattering box 1	Au009	0.25	20	1.596	Goodfellow [1]
	Ni027	2	20	5.794	FILAB [4]
	In003	1	20	2.328	FILAB [1]
	Fe035	3	20	7.306	FILAB [2]
	Mg-SNAC	10	22	6.608	Welience [1]
	Co027	2	20	5.804	FILAB [5]
	Ti	2	20	---	---
Case 5 scattering box 2	Au006	0.25	20	1.621	Goodfellow [1]
	Ni028	2	20	5.794	FILAB [4]
	Co024	2	20	5.804	FILAB [5]
Case 6 scattering box 3	Au011	0.25	20	1.562	Goodfellow [1]
	Ni022	2	20	5.783	FILAB [4]
	Co031	2	20	5.816	FILAB [5]
Case 7 scattering box 4	Au010	0.25	20	1.551	Goodfellow [1]
	Ni025	2	20	5.780	FILAB [4]
	Co036	2	20	5.805	FILAB [5]

1.5.2 Neutron Activation Foil Materials – A chemical analysis was performed for each lot of neutron activation foils. Table 1-14 identifies which analysis results apply to each activation foil. Table 1-15 through Table 1-24 present the results of each analysis referenced in Table 1-14. Since the titanium foil was not used to produce benchmark data for this experiment, no chemical analysis was performed for titanium.

ALARM-TRAN-PB-SHIELD-001

Table 1-15. Results of Goodfellow [1] chemical analysis

Elements	ppm
Fe	1
Cu	1
Ag	2
Au	99.999 wt%

Table 1-16. Results of Goodfellow [2] chemical analysis

Elements	ppm
Na	3
Cu	9
Rh	4
Pt	7
Au	99.997 wt%

Table 1-17. Results of Goodfellow [3] chemical analysis

Elements	ppm
Ni, Cu, Zn, Cd,	< 0.5
Fe, As, Ag, Pb	< 1
In	99.999 wt%
Sn	4
Tl	3

Table 1-18. Results of FILAB [1] chemical analysis

Elements	Weight percent
Ag, As, B, Ba, Be, Ca, Cd, Co, Cr, Cu, Fe, Ga, K, Li, Mg, Mn, Mo, Na, Nb, Ni, P, Pb, Sb, Sn, Ti, Tl, V, Zn	< 0.001
Al, Si	< 0.005
In	99.96

Table 1-19. Results of FILAB [2] chemical analysis

Elements	Weight percent
Ag, Ba, Be, Cd, Ga, K, Li, Mg, Mo, Na, Nb, Pb, Pd, Se, Ti, V, Zn, Zr	< 0.001
Ca	< 0.005
Al	0.025
Si	0.013
P	0.009
S	0.008
Cr	0.007
Mn	0.31
Fe	99.58
Co	0.002
Ni	0.004
Cu	0.006
As	0.002
Sn	0.005

Table 1-20. Results of FILAB [3] chemical analysis

Elements	Weight percent
Ag, As, Ba, Be, Bi, Cd, Co, Cu, K, Mo, Na, Nb, P, Pb, Sb, Sn, Sr, V, W, Zn, Zr	< 0.001
B	0.0017
Mg	0.085
Al	0.005
Si	0.015
Ca	0.022
Ti	0.04
Cr	0.008
Mn	0.095
Fe	0.013
Ni	99.69

Table 1-21. Results of FILAB [4] chemical analysis

Elements	Weight percent
Ag, As, B, Ba, Be, Bi, Cd, K, Mo, Na, Nb, P, Pb, Sn, Sr, V, W, Zn, Zr	< 0.001
Mg	0.013
Al	0.013
Si	0.035
Ca	0.008
Ti	0.029
Cr	0.003
Mn	0.10
Fe	0.056
Co	0.034
Ni	99.68
Cu	0.003

Table 1-22. Results of FILAB [5] chemical analysis

Elements	Weight percent
Ag, Al, As, B, Ba, Be, Bi, Cd, Cr, Cu, K, Mg, Mn, Mo, Na, Nb, Ni, P, Pb, Sb, Si, Sn, Sr, Ta, Ti, V, Zn, Zr	< 0.001
Al, Si	< 0.005
Ca	0.008
Fe	0.003
Co	99.95

Table 1-23. Results of FILAB [6] chemical analysis

Elements	Weight percent
Ag, As, B, Ba, Be, Bi, Ca, Cd, Co, Cr, K, Mo, Na, Nb, P, Sb, Sn, Ti, V, W, Y, Zr	< 0.001
Al	< 0.005
Mg	99.93
Si	0.006
Mn	0.032
Fe	0.003
Ni	0.001
Cu	0.002
Zn	0.002
Pb	0.002

Table 1-24. Results of Welience [1] chemical analysis

Elements	Weight percent
Na	0.002
Mg	99.9
Si	0.175
Ca	0.004
Mn	0.008
Fe	0.005
Cu	0.001
Ag	0.001

1.5.3 TLD Dimensions – Three different types of TLDs were used in this experiment: (1) an Al_2O_3 powder TLD provided by Valduc, (2) a Harshaw Beta-Gamma dosimeter with three TLD-700 and one TLD-600 LiF chips, and (3) a Harshaw DXT dosimeter with a single TLD-707H LiF chip. The Harshaw TLDs were provided by ORNL. The Valduc TLD was calibrated to air kerma due to ^{60}Co while ORNL's calibration was for air kerma due to ^{137}Cs. Measurement results from all three dosimeters will be presented in the benchmark, but only the Valduc Al_2O_3 TLD will be described in full detail. Section 2.0 explains that it is unnecessary to include the Al_2O_3 TLD body and powder in the benchmark model, but this TLD will be descried to provide a more complete benchmark model and because its geometry is simple. The Valduc Al_2O_3 TLD powder is held inside a cylindrical container. A drawing of this container is shown in Figure 1-60.

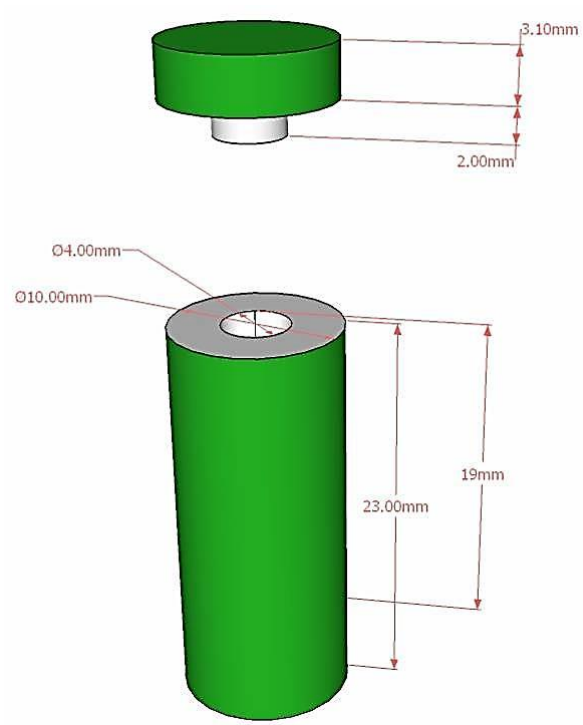

Figure 1-60. Valduc Al_2O_3 TLD container.

1.5.4 TLD Materials – The Valduc Al_2O_3 TLD container is made of AU4G aluminum alloy, and the standard composition of this aluminum alloy is presented in Table 1-25.

Table 1-25. Standard composition of AU4G aluminum alloy

Element	Weight percent
Mg	0.4–1.0
Al	Balance
Si	0.3–0.8
Ti + Zr	≤ 0.2
Cr	≤ 0.1
Mn	0.3–0.8
Fe	≤ 0.5
Cu	3.5–3.7
Zn	≤ 0.2
Density	2.8 g/cm^3

No analysis was performed to determine the impurity composition of the Al_2O_3 TLD powder, so this powder is assumed to be 100% pure. The average mass of TLD powder in one of these containers was calculated from the measurement results of 10 samples, which was determined to be 432 mg ± 30 mg (2σ).

1.5.5 Detector Locations and Configurations – The discussion of detector locations and configurations will be broken into two sections: one for the scattering box locations and one for all the other locations.

1.5.5.1 Collimator and Free Field Detector Locations and Configurations – The same configuration of the neutron activation foils within the foil holders was used in both collimators and at the free field location. The photograph in Figure 1-28 shows an example of this configuration. A photograph of the detector configuration within collimator A is shown in Figure 1-61, and Figure 1-62 provides dimensions to locate the detectors inside of collimator A. These figures for collimator A are followed by Figure 1-63 and Figure 1-64, which provide the same information for collimator B.

ALARM-TRAN-PB-SHIELD-001

Figure 1-61. Collimator A detector configuration.

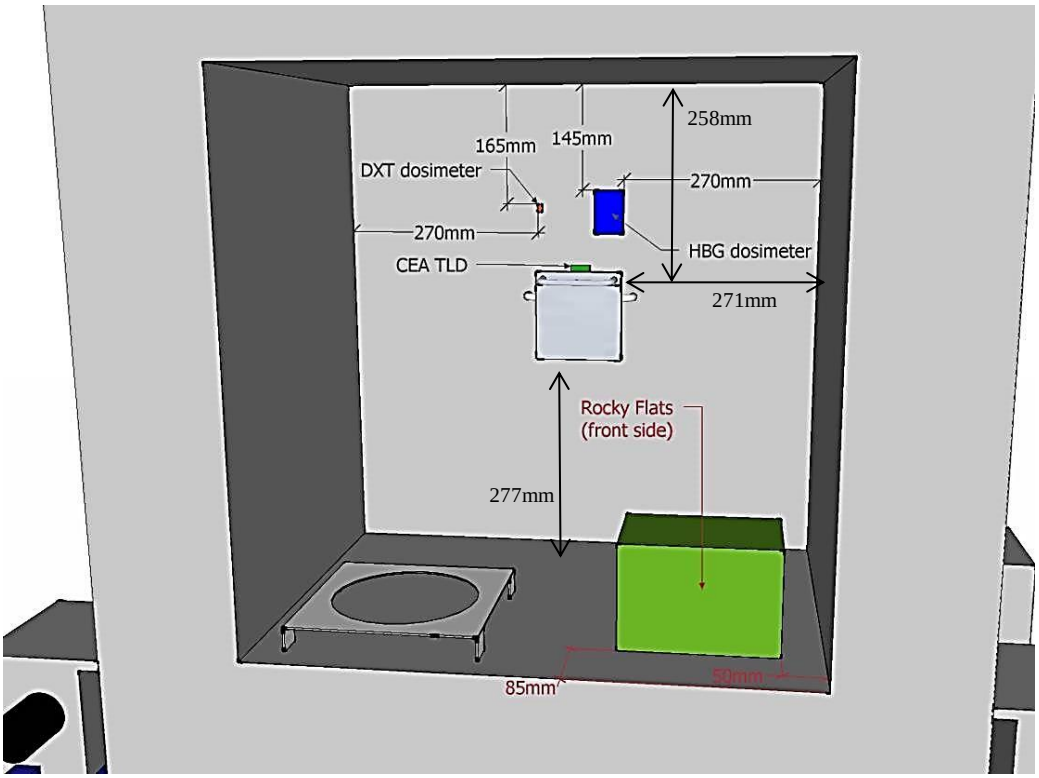

Figure 1-62. Detector locations within collimator A.

ALARM-TRAN-PB-SHIELD-001

Figure 1-63. Collimator B detector configuration.

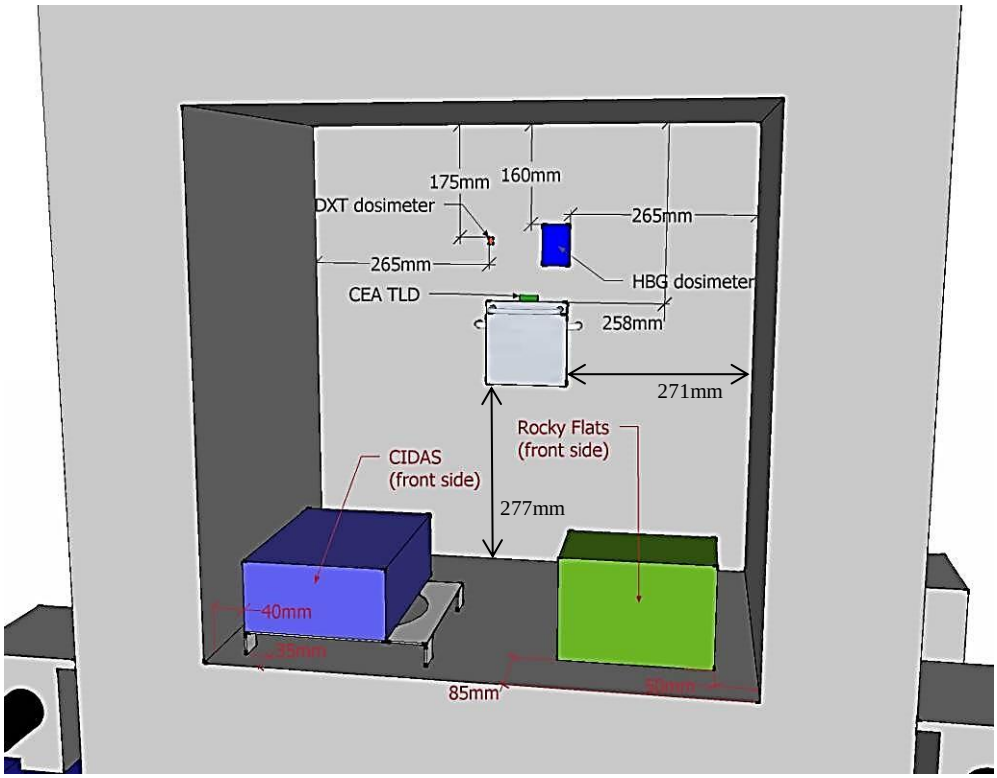

Figure 1-64. Detector locations within collimator B.

Similar to the previous figures in this section, Figure 1-65 shows a photograph of the detectors at the free field location, and Figure 1-66 and Figure 1-67 show dimensions to locate the detectors on the support stand.

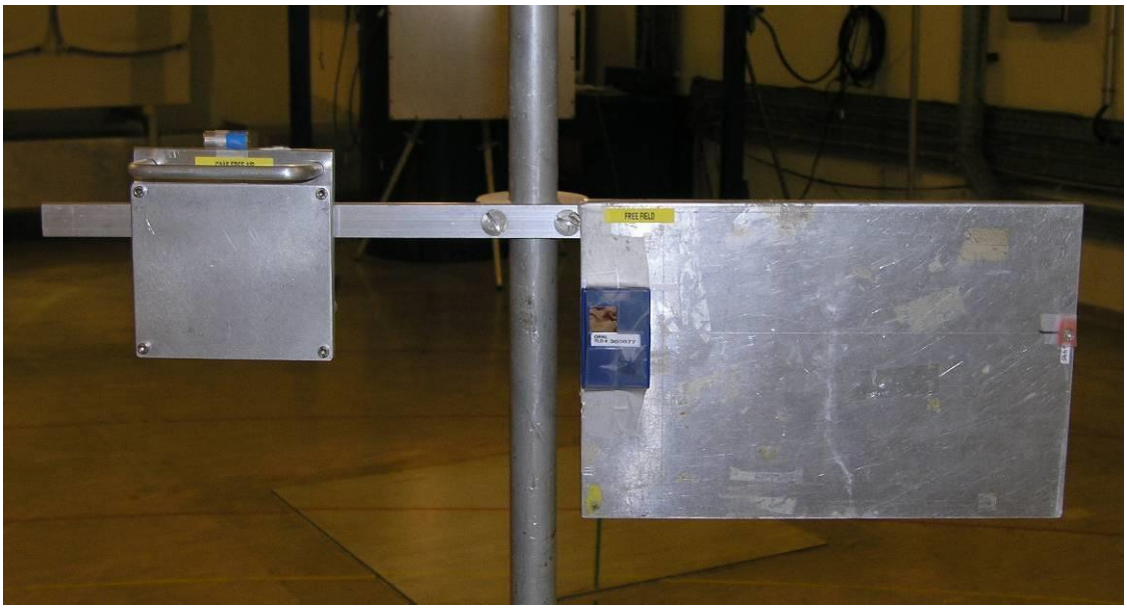

Figure 1-65. Free field detector configuration.

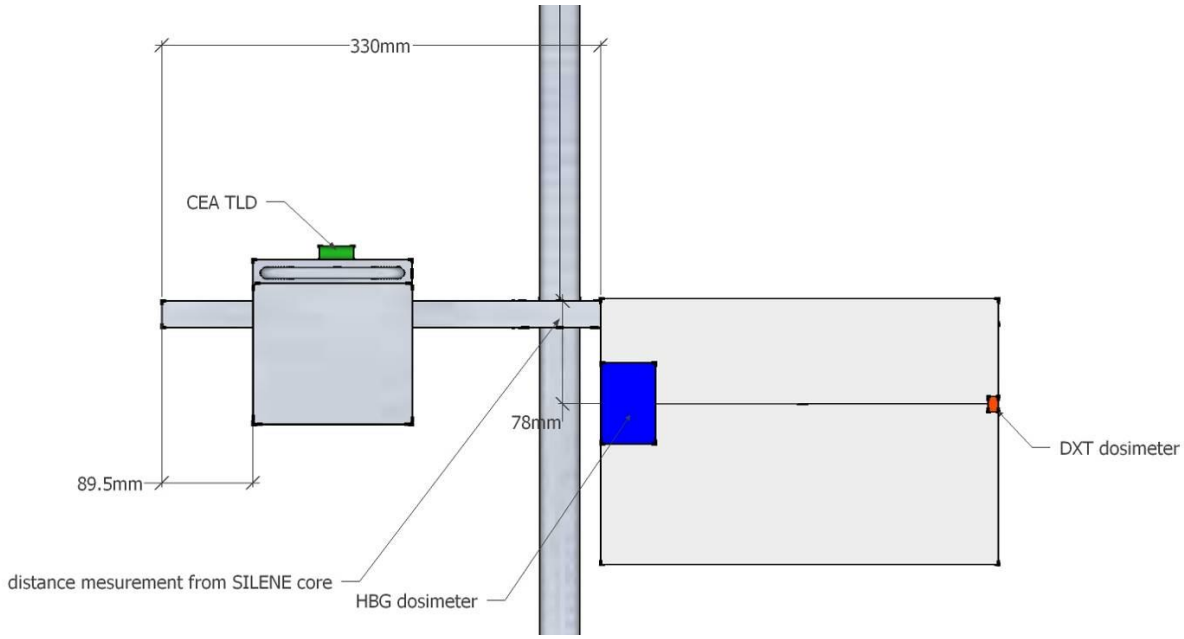

Figure 1-66. Detector locations on the free field stand.

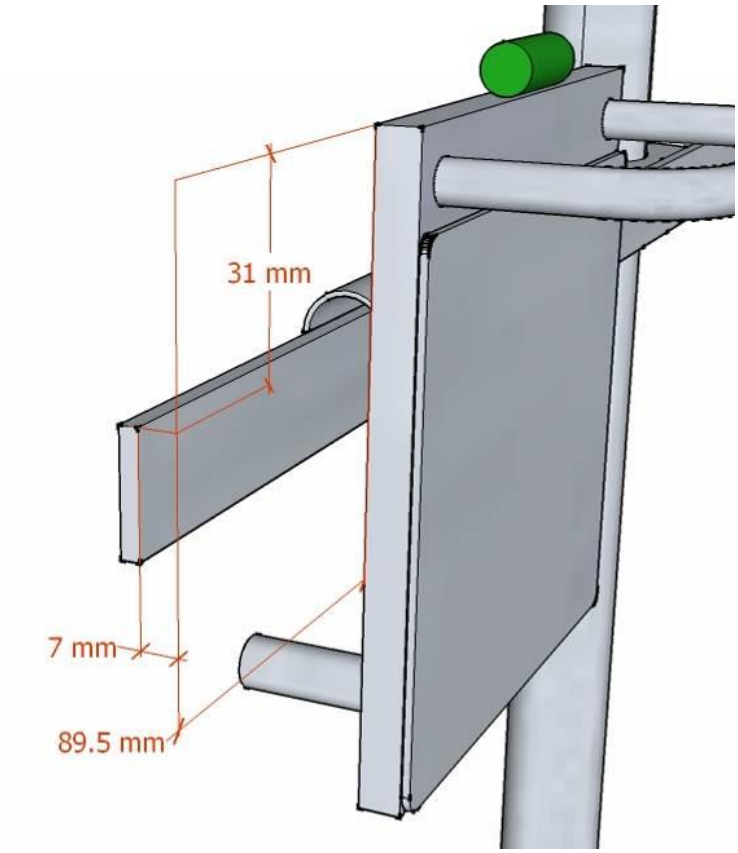

Figure 1-67. Detail of the free field neutron activation foil holder.

1.5.5.2 Scattering Box Detector Locations and Configurations – Scattering box positions 1 through 4 (SB1 – SB4) are located with dimensions in Figure 1-68 through Figure 1-71.

ALARM-TRAN-PB-SHIELD-001

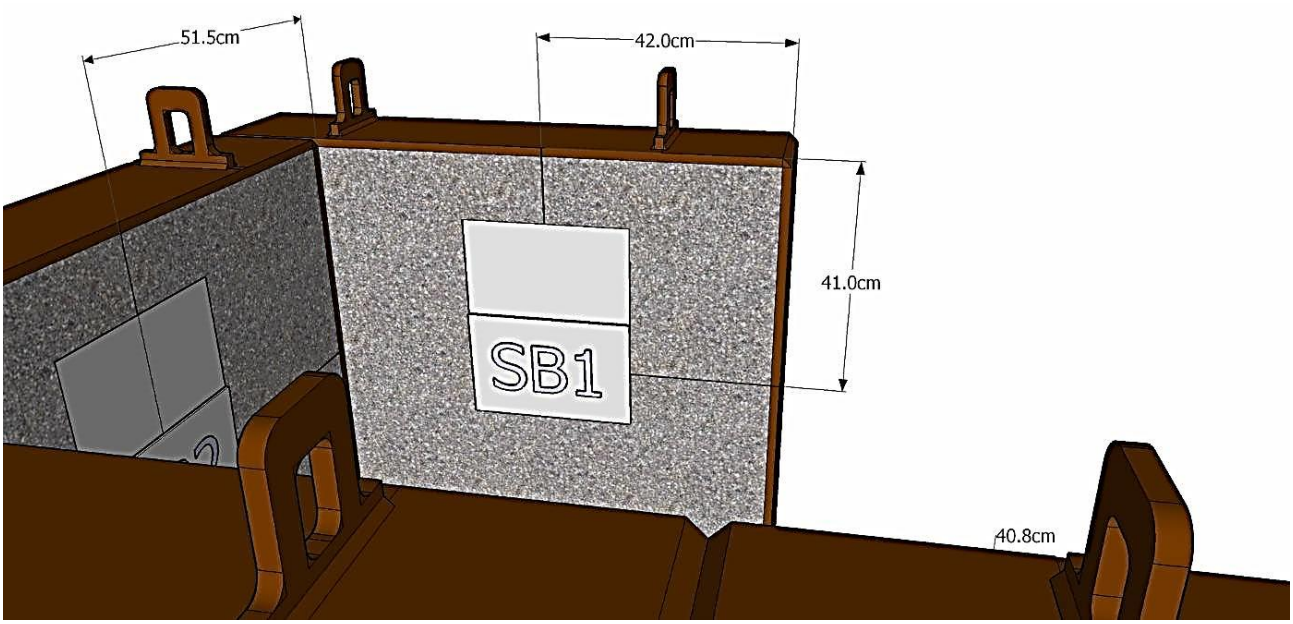

Figure 1-68. Scattering box position 1 dimensions.

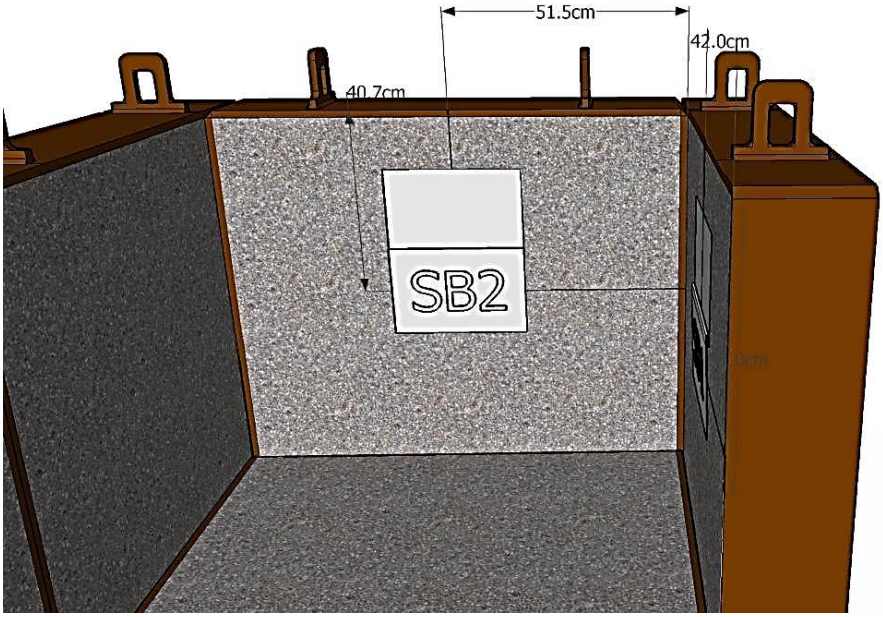

Figure 1-69. Scattering box position 2 dimensions.

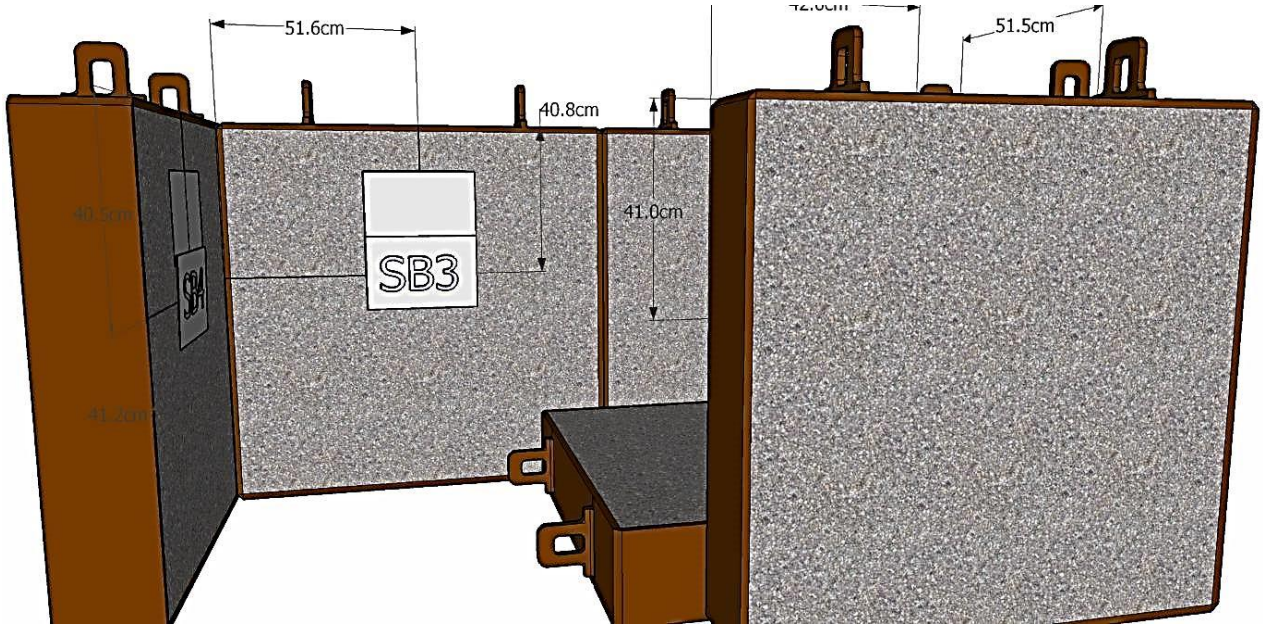

Figure 1-70. Scattering box position 3 dimensions.

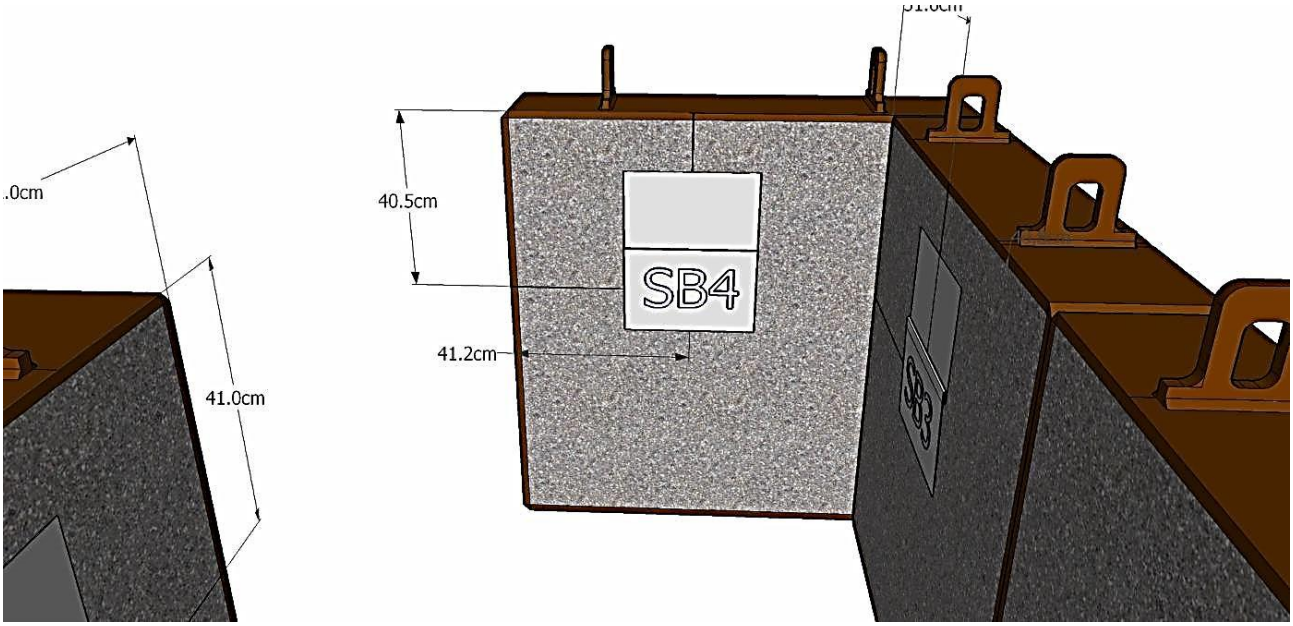

Figure 1-71. Scattering box position 4 dimensions.

The configuration of neutron activation foils at scattering box position 1 (SB1) is identical to that within the foil holder, but a set of detector mounting plates is used to support the detectors instead of a foil holder. Figure 1-72 shows a photograph of the detectors at SB1, and Figure 1-73 provides dimensions to locate these detectors on the mounting plate.

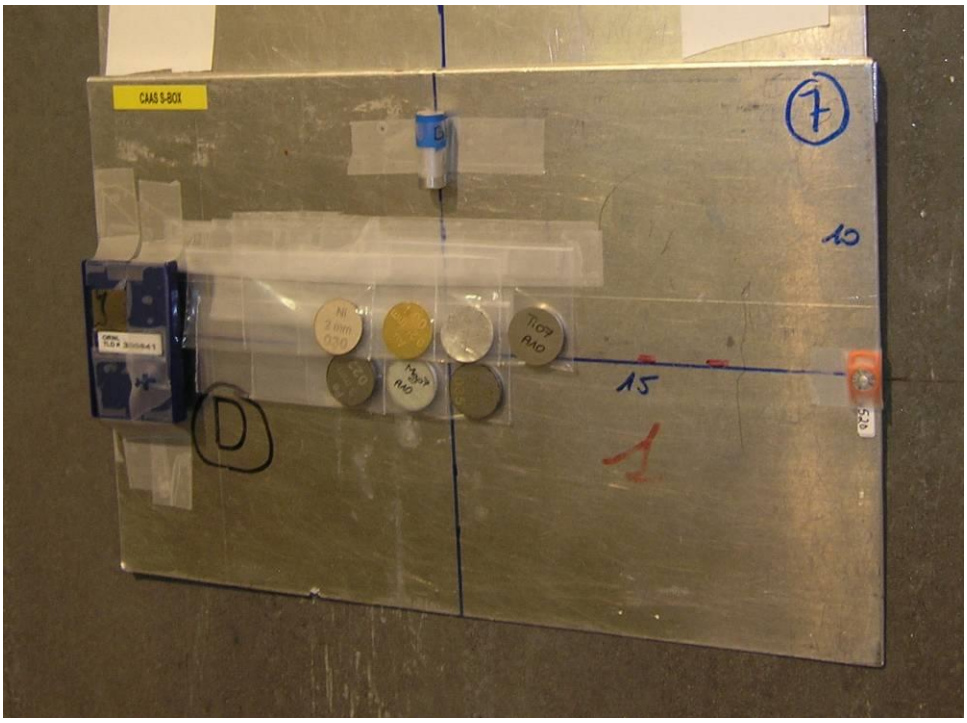

Figure 1-72. Detectors at scattering box position 1.

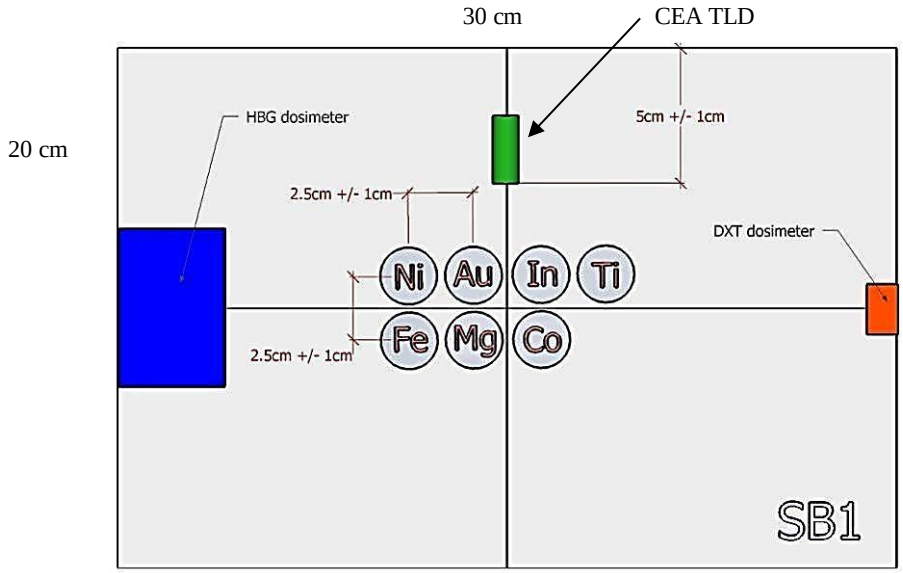

Figure 1-73. Location of detectors on scattering box position 1 mounting plate.

The detector configuration at scattering box positions 2 through 4 are different from position 1 because a subset of the neutron activation foils is used. Only the nickel, gold, and cobalt activation foils are used in

positions 2, 3, and 4. Figure 1-74 shows a photograph of SB2, and Figure 1-75 provides dimensions to locate these detectors on the mounting plate.

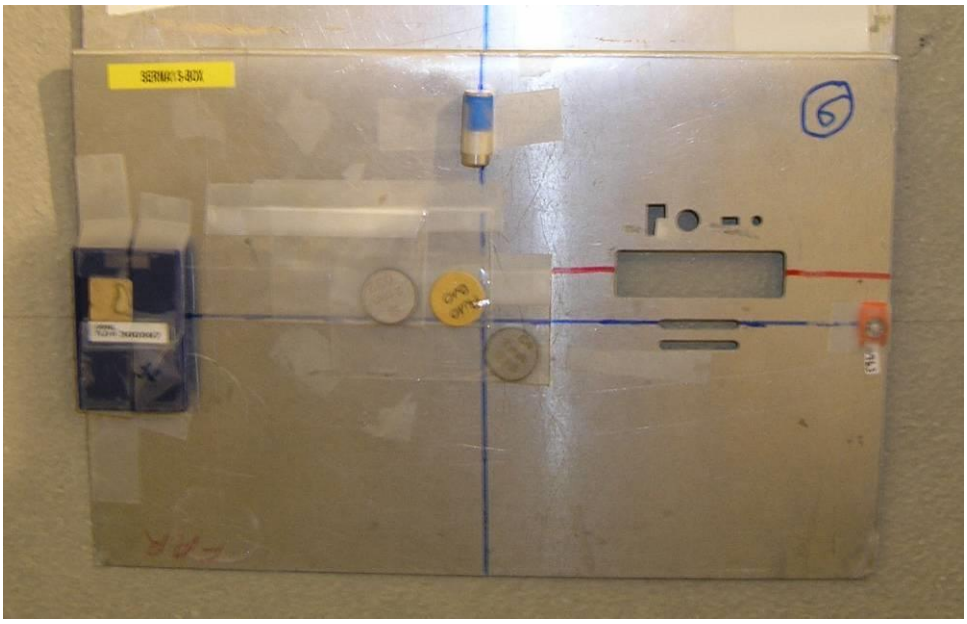

Figure 1-74. Detectors at scattering box position 2.

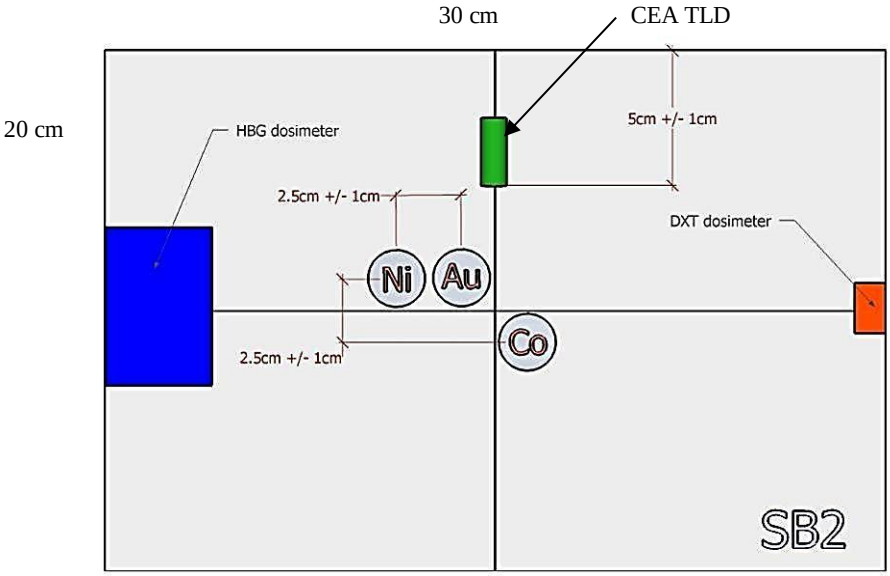

Figure 1-75. Location of detectors on scattering box position 2 mounting plate.

The detector configuration at scattering box positions 3 and 4 are different from position 2 because only the Valduc Al_2O_3 TLD is used. Figure 1-76 shows a photograph that represents SB3 and SB4, and Figure 1-77 provides dimensions to locate these detectors on the mounting plate.

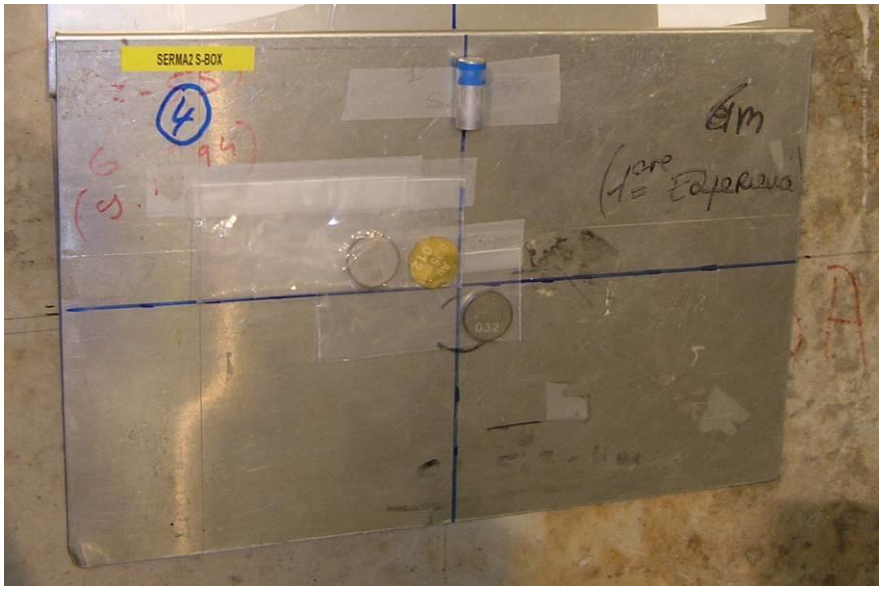

Figure 1-76. Detectors at scattering box positions 3 and 4.

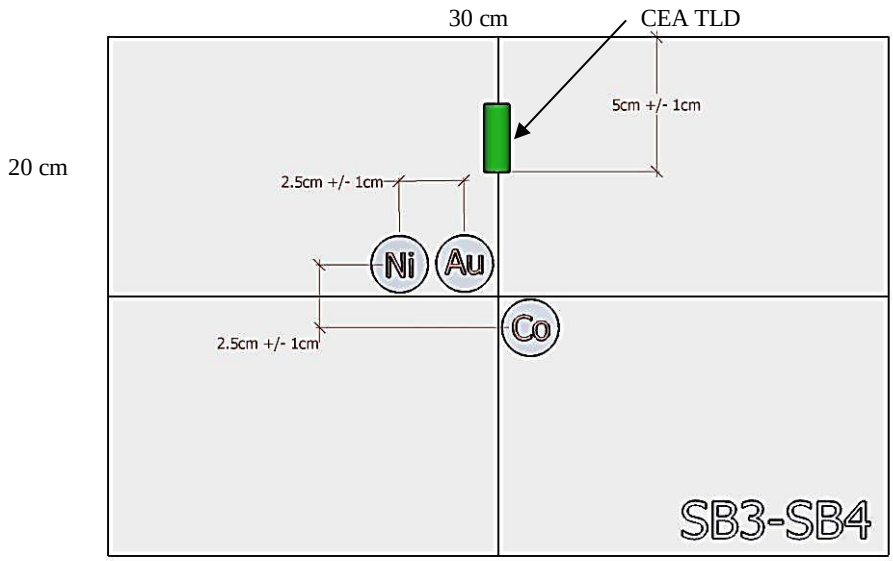

Figure 1-77. Location of detectors on scattering box positions 3 and 4 mounting plate.

As can be seen in the photographs shown in Figure 1-72, Figure 1-74, and Figure 1-76, the neutron activation foils have been attached to the aluminum mounting plates using plastic bags and tape. Discussions during the experiments concluded that a thin plastic bag would not likely perturb the neutron flux to which the foils are exposed. Based on this conclusion, no details about the plastic bags and tape were recorded. The actual application of this technique placed each foil in its own plastic bag, which results in several layers of plastic

between the neutron activation foils and SILENE. This is particularly true for the foils at scattering box position 1 (Figure 1-72). The impact of these plastic bags will be further discussed in Section 2.0.

1.6 Measurement Techniques

After the experimental setup described in Sections 1.1 through 1.5 was complete, an approach-to-critical was performed with the cadmium control rod fully extracted from the SILENE assembly, and the critical height was found to be 31.322 cm. For this experiment, the final solution height was 34.560 cm, which is 3.238 cm above the critical height with the control rod fully extracted. The critical pulse was initiated by the reactor operator fully removing the cadmium control rod at a rate of 2 m/sec. An external neutron source used during the initial steps of the approach-to-critical was removed before the experiment was conducted. From the Valduc logbook, this was SILENE operation S2-689, and there was 32.38 mm of excess reactivity. Units of mm are used for excess reactivity because the experimenters at Valduc, through years of experience with SILENE, knew approximately how much excess reactivity was added to SILENE per mm of solution. For the lead reflected geometry this value is 81 pcm/mm, which equates to approximately 2623 pcm of excess reactivity for this experiment (see Appendix H for more details).

The neutron activation measurement techniques in this experiment are well established techniques that have been used for many years.[a] The neutron activation foils, as the name implies, become activated by the neutrons produced during the critical pulse of the SILENE assembly. About 3 hours after the critical pulse, the dosimetrist retrieved the neutron activation foils and TLDs from the SILENE room and began measuring the amount of activity in the foils and the dose absorbed by the TLDs. The activity measurements were performed over a few days following the excursion using a liquid nitrogen–cooled high purity germanium (HPGe) detector. The numbers of activated nuclei were all adjusted back to the same time shortly after the end of the pulse using the radioactive decay law:

$N(t) = N_0 e^{-\lambda t}$, where $\lambda = \frac{\ln(2)}{t_{1/2}}$ and $t_{1/2}$ is the activation product half-life.

The amount of activity, A, was calculated using the expression:

$$A = -\frac{dN}{dt} = \lambda N.$$

The use of the expressions above relies on the assumption that all the activated nuclei were created instantaneously. All fission neutrons and activated nuclei are created at time t=0 seconds. While that is not completely true for this experiment (see Figure 1-78), nearly all the fission events / neutrons / activated nuclei were created in such a short period of time compared to the half-life of the activation products that this assumption can be safely applied.

Below in Table 1-26 is a list of the neutron activation foils used in this experiment, the reaction products whose activity were measured, the half-lives of these reaction products, and some of the stronger gamma lines produced by these activation products.

[a] N. Tsoulfanidis, Measurement and Detection of Radiation, Second Edition, Taylor & Francis, Washington, DC, Sections 14.4 and 15.5 (1995).

Table 1-26. Neutron activation foils and measured activation products[(a)]

Foil	Reaction product	Half-life	Gamma lines (keV)	Relative intensity
Gold	$^{197}Au(n,\gamma)^{198}Au$	2.6948 days	411.80	95.24%
Indium	$^{115}In(n,n'\gamma)^{115m}In$	4.486 hrs	336.20	45.80%
			416.86	27.70%
	$^{115}In(n,\gamma)^{116}In$	54.29 min	1097.30	56.20%
			1293.54	84.40%
Iron	$^{54}Fe(n,p)^{54}Mn$	312.12 days	834.80	99.97%
	$^{56}Fe(n,p)^{56}Mn$	2.5789 hrs	846.80	98.85%
	$^{55}Mn(n,\gamma)^{56}Mn$		1810.70	26.90%
Nickel	$^{58}Ni(n,p)^{58}Co$	70.86 days	810.80	99.45%
Cobalt	$^{59}Co(n,\gamma)^{60}Co$	1925.28 days	1173.20	99.85%
			1332.50	99.98%
Magnesium	$^{24}Mg(n,p)^{24}Na$	14.997 hrs	1368.60	99.99%

(a) http://www.nndc.bnl.gov/nudat2

The entire process of determining the amount of dose absorbed by a TLD is not as straightforward as the activity in a foil. Collecting the TLDs and reading the absorbed dose is straightforward (i.e., the process of heating the TLD, measuring the intensity of visible photons, and converting that to absorbed dose). However, calibrating a TLD, creating a light or glow curve (correlation between light emitted and absorbed dose), and accounting for the many possible variations in TLD behavior (e.g., linearity versus supralinearity, fading, presence of neutrons, etc.) is more complex. Each TLD must be calibrated because two seemingly identical TLDs can be exposed to the same source and produce a different response. Furthermore, the responses of these TLDs exposed to the same source can change over time, requiring occasional recalibration.

The dose used in this benchmark is kerma in air, which has the same units as absorbed dose (not equivalent dose). Kerma (an acronym for kinetic energy of radiation produced per unit mass in matter) is usually easier to calculate than the actual absorbed dose. This is the case because it is fairly easy to determine the initial kinetic energy of all charged particles created by a neutral particle, but it is difficult to know the amount of energy deposited in a material before the charged particle exits that material. It is expensive to transport the charged particle and determine the exact amount of energy deposited. Therefore, a popular approximation to absorbed dose is kerma. However, kerma and absorbed dose are equivalent when the material volume of interest has reached charged particle equilibrium. Charged particle equilibrium exists for a material volume if, for every charged particle exiting the volume, there is one charged particle of the same type entering the volume with the same kinetic energy and traveling in the same direction. The simplest case in which charged particle equilibrium exists is when the material volume is large and no charged particles produced can exit the volume.

Section 1.5 shows that the TLDs were not made of air, and the energy absorbed in air was not actually measured. The air kerma measurements were possible because of the calibration[a] performed with the TLDs. The air kerma was estimated based on a correlation between air kerma and the light emitted by the TLD materials when heated. This is based on the calibration of *each individual* TLD. All the gamma dose measurements in this benchmark rely on these TLD calibrations. The Valduc Al_2O_3 TLD powder, which is contained in an aluminum equilibrator, was calibrated to air kerma due to a ^{60}Co source. The ORNL TLDs, whose measurement results are presented but are not used in the benchmark, both have a plastic equilibrator and were calibrated to air kerma due to a ^{137}Cs source. The purpose of the equilibrator is to ensure that the

[a] P. J. Lamperti and M. O'Brien, "NIST Measurement Services: Calibration of X-Ray and Gamma-Ray Measuring Instruments," NIST Special Publication 250-58, National Institute of Standards and Technology, April 2001.

TLD material inside the equilibrator is in charged particle equilibrium. An important thing to note is that no corrections or adjustments have been made to the measured TLD dose data to account for the fact that the source in this experiment is a critical pulse (fission neutrons and photons) and not a ^{60}Co or ^{137}Cs source.

Once the TLDs were removed from the SILENE room, the aluminum card holding the TLD chips in the ORNL Harshaw Beta-Gamma dosimeter was removed from the case because the case contained an activated copper filter that would continue to contribute to the measured absorbed dose. After the absorbed dose of each TLD was read, the dose due to background was subtracted. This was more important for the ORNL TLDs because they were shipped via airplane from ORNL to Valduc for the experiments and shipped back to be read. Some fraction of the dose recorded by the TLDs is not directly related to the critical pulse. During the ~3 hours between the end of the pulse and retrieval of the detectors, the TLDs continued to measure absorbed dose due to the decay of activation products in the SILENE room.

1.7 Measurement Results

At 10:52:31 on October 13, 2010, the reactor operator began the critical pulse by withdrawing the cadmium control rod. Approximately 6 seconds later at 10:52:37, the reactor operator shut down the experiment by opening the valve to drain the uranyl nitrate solution from SILENE and returning the cadmium control rod to the fully inserted position. The dosimetrist reported the activity of the activation products listed in Table 1-26 at 10:55:06 on October 13, 2010. During the time between 10:52:37 and 10:55:06, some additional fission events did occur, primarily driven by delayed neutrons. This is evident in Figure 1-78, which shows a plot of the fission rate versus time data recorded by the experimentalist.

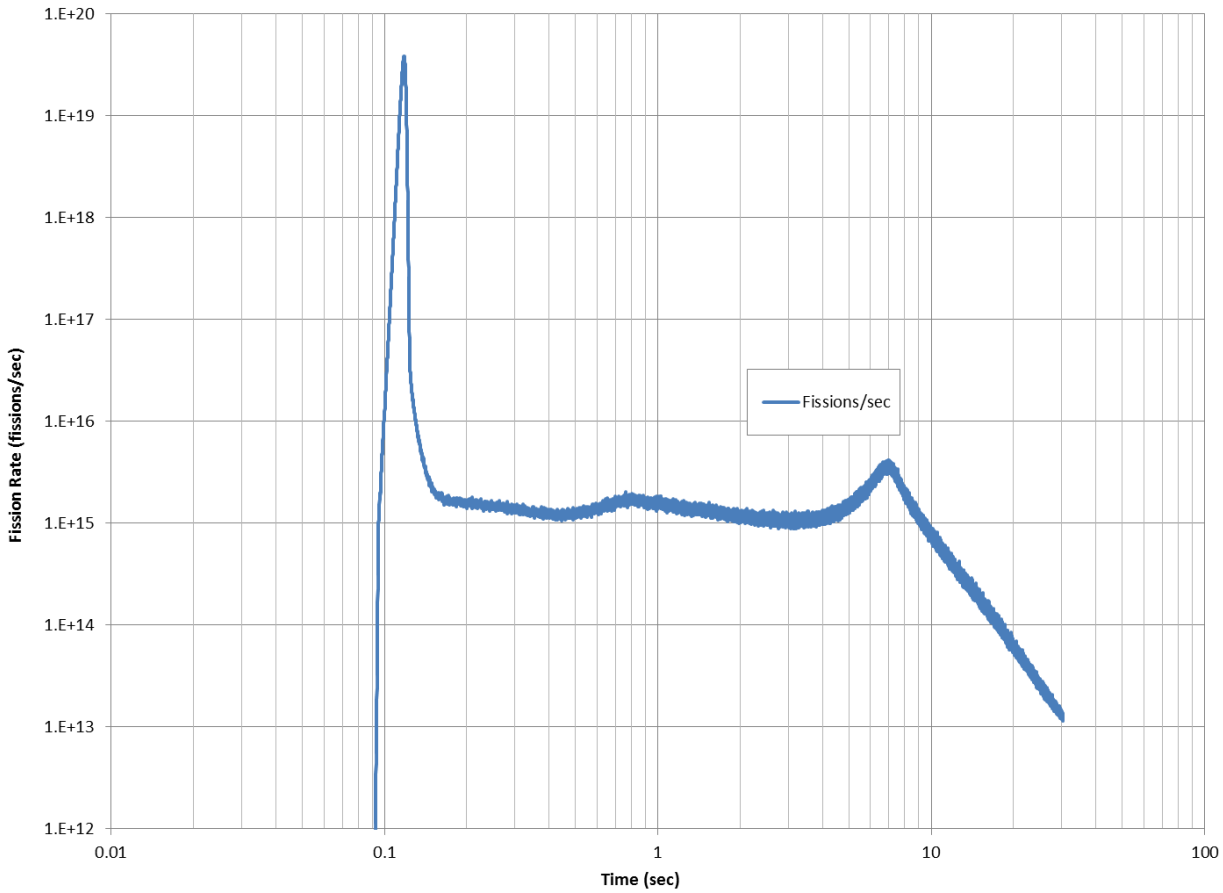

Figure 1-78. Fission rate as a function of time.

Two measurements of the number of fission events during the critical pulse were reported. The first, 2.14×10^{17} fissions, was measured by one of the diagnostic detectors in the SILENE room and is considered by the experimenters to be the best estimate. The second, 2.22×10^{17} fissions, was measured by SNAC, which is a criticality accident dosimeter used at Valduc. There are two thermocouples inside the SILENE assembly that measure the solution temperature. Just before the critical excursion, the temperatures recorded from these thermocouples were 19.86 and 20.56 degrees Celsius. The maximum temperatures during the critical excursion recorded by these thermocouples were 74.79 and 72.53 degrees Celsius.

Table 1-27 presents the results of the neutron activation foil measurements (adjusted to 10:55:06 on October 13, 2010), and Table 1-28 includes the results of the TLD dose measurements. The neutrons are not all born at the same time, but most of them are born during the pulse at about 0.12 seconds. A perfect model of this source would be time-, temperature-, density-, and position-dependent. Density and position are affected because of bubbles that form due to fission product gases (small contributor), radiolytic gases (larger contributor), and changes in liquid density due to changes in temperature. The doses reported in Table 1-28 include contributions from prompt fission photons, photons produced by (n,γ) reactions, delayed photons from fission products, and delayed photons from activation products. The doses measured by the Valduc Al_2O_3 TLDs will be used for the benchmark, and the ORNL TLDs (HBG and DXT) are additional data. This is because the Valduc staff have more experience using these TLDs in the SILENE environment, and Al_2O_3 responds less to neutrons than LiF. Based on Figure 1-78, some of the uranyl nitrate solution was in SILENE

for at least 30 seconds after the excursion and could have been there longer. That amount of time would allow short-lived fission products to decay and produce delayed fission product photons. The activation foils and TLDs were not removed from the SILENE room immediately following the excursion, which allowed any activated equipment to decay and contribute to the TLD dose.

ALARM-TRAN-PB-SHIELD-001

Table 1-27. Neutron activation foils measurement results

Position	Reaction	Activity (Bq/g)	Absolute uncertainty[(a)] (2 σ)	Relative uncertainty[(a)] (2 σ)
Case 1 collimator A	$^{59}Co(n,\gamma)^{60}Co$	6.090E+01	2.600E+00	4.27%
	$^{197}Au(n,\gamma)^{198}Au$	6.880E+04	2.100E+03	3.05%
	$^{115}In(n,\gamma)^{116}In$	7.950E+06	3.300E+05	4.15%
	$^{115}In(n,n'\gamma)^{115m}In$	6.100E+03	2.100E+02	3.44%
	$^{54}Fe(n,p)^{54}Mn$[(b)]	---	---	---
	$^{56}Fe(n,p)^{56}Mn$ + $^{55}Mn(n,\gamma)^{56}Mn$	2.020E+03	1.000E+02	4.95%
	$^{24}Mg(n,p)^{24}Na$	2.480E+01	1.000E+00	4.03%
	$^{58}Ni(n,p)^{58}Co$	6.860E+00	2.200E-01	3.21%
Case 2 collimator B	$^{59}Co(n,\gamma)^{60}Co$	3.230E+01	1.400E+00	4.33%
	$^{197}Au(n,\gamma)^{198}Au$	3.101E+04	9.600E+02	3.10%
	$^{115}In(n,\gamma)^{116}In$	3.840E+06	1.500E+05	3.91%
	$^{115}In(n,n'\gamma)^{115m}In$	9.400E+02	3.700E+01	3.94%
	$^{54}Fe(n,p)^{54}Mn$[(b)]	---	---	---
	$^{56}Fe(n,p)^{56}Mn$ + $^{55}Mn(n,\gamma)^{56}Mn$	1.040E+03	3.000E+01	2.88%
	$^{24}Mg(n,p)^{24}Na$	5.520E+00	6.200E-01	11.23%
	$^{58}Ni(n,p)^{58}Co$	1.271E+00	4.100E-02	3.23%
Case 3 free field	$^{59}Co(n,\gamma)^{60}Co$	6.270E+01	2.800E+00	4.47%
	$^{197}Au(n,\gamma)^{198}Au$	6.430E+04	2.000E+03	3.11%
	$^{115}In(n,\gamma)^{116}In$	7.850E+06	3.000E+05	3.82%
	$^{115}In(n,n'\gamma)^{115m}In$	5.210E+03	1.800E+02	3.45%
	$^{54}Fe(n,p)^{54}Mn$[(b)]	---	---	---
	$^{56}Fe(n,p)^{56}Mn$ + $^{55}Mn(n,\gamma)^{56}Mn$	2.084E+03	5.300E+01	2.54%
	$^{24}Mg(n,p)^{24}Na$	2.640E+01	1.900E+00	7.20%
	$^{58}Ni(n,p)^{58}Co$	6.340E+00	2.000E-01	3.15%
Case 4 scattering box 1	$^{59}Co(n,\gamma)^{60}Co$	2.440E+01	1.100E+00	4.51%
	$^{197}Au(n,\gamma)^{198}Au$	2.412E+04	7.500E+02	3.11%
	$^{115}In(n,\gamma)^{116}In$	2.910E+06	1.300E+05	4.47%
	$^{115}In(n,n'\gamma)^{115m}In$	3.230E+02	1.100E+01	3.41%
	$^{54}Fe(n,p)^{54}Mn$[(b)]	---	---	---
	$^{56}Fe(n,p)^{56}Mn$ + $^{55}Mn(n,\gamma)^{56}Mn$	8.810E+02	2.200E+01	2.50%
	$^{24}Mg(n,p)^{24}Na$	1.206E+00	7.600E-02	6.30%
	$^{58}Ni(n,p)^{58}Co$	3.230E-01	1.300E-02	4.02%
Case 5 scattering box 2	$^{59}Co(n,\gamma)^{60}Co$	2.810E+01	1.200E+00	4.27%
	$^{197}Au(n,\gamma)^{198}Au$	2.583E+04	7.800E+02	3.02%
	$^{58}Ni(n,p)^{58}Co$	1.898E-01	6.200E-03	3.27%
Case 6 scattering box 3	$^{59}Co(n,\gamma)^{60}Co$	4.570E+01	1.900E+00	4.16%
	$^{197}Au(n,\gamma)^{198}Au$	4.370E+04	1.400E+03	3.20%
	$^{58}Ni(n,p)^{58}Co$	1.750E+00	1.100E-01	6.29%
Case 7 scattering box 4	$^{59}Co(n,\gamma)^{60}Co$	4.120E+01	1.800E+00	4.37%
	$^{197}Au(n,\gamma)^{198}Au$	3.900E+04	1.300E+03	3.33%
	$^{58}Ni(n,p)^{58}Co$	1.830E+00	1.200E-01	6.56%

[(a)] These represent the statistical uncertainty of the measurement.
[(b)] No statistically significant data could be measured for this reaction.

ALARM-TRAN-PB-SHIELD-001

Table 1-28. TLD dose measurement results

Position	TLD Type	Dose (Gy)	Absolute uncertainty[a] (2 σ)	Relative uncertainty[a] (2 σ)
Case 1 collimator A	Al_2O_3	8.200E-01	3.900E-02	4.76%
	HBG	1.060E+00	6.360E-02	6.00%
	DXT	1.020E+00	6.120E-02	6.00%
Case 2 collimator B	Al_2O_3	5.500E-01	1.100E-01	20.00%
	HBG	6.200E-01	3.720E-02	6.00%
	DXT	5.730E-01	3.438E-02	6.00%
Case 3 free field	Al_2O_3	5.620E-01	2.900E-02	5.16%
	HBG	7.600E-01	4.560E-02	6.00%
	DXT	5.890E-01	3.534E-02	6.00%
Case 4 scattering box 1	Al_2O_3[b]	4.000E-01	---	---
	HBG	4.020E-01	2.412E-02	6.00%
	DXT	3.710E-01	2.226E-02	6.00%
Case 5 scattering box 2	Al_2O_3[b]	3.000E-01	---	---
	HBG	3.500E-01	2.100E-02	6.00%
	DXT	2.940E-01	1.764E-02	6.00%
Case 6 scattering box 3	Al_2O_3	4.200E-01	3.000E-02	7.14%
Case 7 scattering box 4	Al_2O_3	7.800E-01	3.500E-01	44.87%

[a] These represent the statistical uncertainty of the measurement.
[b] No uncertainty value was reported for this measurement.

2.0 EVALUATION OF EXPERIMENTAL DATA

This section reviews all the experimental data and evaluates the experimental uncertainties. The purpose is to identify any data that is not of benchmark quality due to (1) inconsistencies between the measured values and the expected measured values or (2) due to large experimental uncertainties. The experimental uncertainties will be calculated using MCNP6[a] with continuous energy ENDF/B-VII.1[b] cross section data unless explicitly stated otherwise. Two exceptions to this are the response functions used for both of the indium activation reactions, which use continuous energy cross sections from the IRDF-2002[c] cross section library. The IRDF cross sections are used because the cross sections distributed with MCNP based on ENDF data are transport cross sections which do not accurately reproduce the return to the ^{115}In ground state after the ^{115}In(n,n'γ)^{115m}In reaction. As for the ^{115}In(n,γ)^{116}In reaction, the IRDF cross section produces a smaller bias between the experimentally measured values than the MCNP ENDF-based cross section.

2.1 Comparison and Initial Evaluation of the Experimentally Measured Data

The dosimetrists who measured the amount of activity in each foil and the dose absorbed in each TLD provided their opinions about the quality of the experimentally measured data. This is reflected in Table 1-27 and Table 1-28. Any data the dosimetrists felt were poor quality has been omitted from these tables or has a very large reported uncertainty. How exactly this was reported in the tables varied between the dosimetrists in France and the US. Dosimetrists concluded that some measured data were poor quality due to the statistical uncertainty in their measurements. The same is true when counting decay gammas to determine the neutron activation or visible light emitted by the TLDs to determine the absorbed TLD dose.

Before the full experimental uncertainties of the measured data for this experiment are evaluated, all of the measured data from the full series of experiments are compared (comparing ALARM-TRAN-AIR-SHIELD-001 or experiment 1, ALARM-TRAN-PB-SHIELD-001 or experiment 2, and ALARM-TRAN-CH2-SHIELD-001 or experiment 3). These comparisons of each activation reaction and TLD are presented in Table 2-1 through Table 2-11. The comparison analyzes ratios of similar measurements within a specific experiment, and based on these similarities, trends are found in the ratios. Similar trends are anticipated between all the experiments in this series of benchmarks. Since the ratios are for similar measurements within an experiment but not for identical measurements, the ratios will not be identical. Further differences are introduced by uncertainties in the measurement data. The same ratios between different experiments will not be identical because of measurement uncertainties and because of the different shielding material between SILENE and all the detectors in each experiment. Table 2-1 through Table 2-11 list the ratios, and expected trends are summarized. Table 2-1 through Table 2-11 also include the absolute uncertainty of the ratios (2-sigma).

- The neutron activation foils in collimator A (A) and at the free field location (FF) are the same distance from SILENE. Because of scattering in collimator A, the ratio A/FF should be greater than 1, but measurement uncertainties may make the value close to 1.
- The foils in collimator A and the free field location are unshielded like the foils at scattering box positions 3 (SB3) and 4 (SB4). However, scattering box positions 3 and 4 foils are farther from SILENE

[a] MCNP6 Development Team, "MCNP6 User's Manual, Version 1.0," LA-CP-13-00634, Rev. 0, Los Alamos National Laboratory, May 2013.
[b] M. B. Chadwick, et. al., "ENDF/B-VII.1: Nuclear Data for Science and Technology: Cross Sections, Covariances, Fission Product Yields and Decay Data," *Nuclear Data Sheets*, vol. 112, pp. 2887–2996, 2011.
[c] O. Bersillon, et. al., "International Reactor Dosimetry File—2002 (IRDF–2002)," STI/DOC/010/452, International Atomic Energy Agency, 2006.

than collimator A and the free field location. Therefore, the ratios A/SB3, A/SB4, FF/SB3, and FF/SB4 should be greater than 1.

- The foils in collimator B (B) are the same distance from SILENE as collimator A and the free field location. However, collimator B has additional shielding. Therefore, the ratios A/B and FF/B should be greater than 1.
- The foils in collimator B are closer to SILENE than those in scattering box position 1 (SB1). These foils are all shielded, but the shielding in front of collimator B is different for each experiment in the series. Additionally, the material shielding scattering box position 1 from SILENE is denser than any of the collimator B shielding material. However, the collimator B shield for experiment 3 contains a large weight percentage of boron. Therefore, it is difficult to identify the trend the B/SB1 ratio should follow. With all the different shielding materials, it seems reasonable that the trends for this ratio could vary dramatically.
- Scattering box positions 1 and 2 (SB2) are close to each other, so the SB1/SB2 ratio is expected to be near 1 or greater than 1.

Table 2-1. Comparison of ^{197}Au(n,γ)^{198}Au reaction data

Experiment	A/FF	A/SB3	A/SB4	FF/SB3	FF/SB4	A/B	FF/B	B/SB1	SB1/SB2
1	2.61 ± 0.1137	4.06 ± 0.1805	4.68 ± 0.2068	1.56 ± 0.0679	1.80 ± 0.0778	7.47 ± 0.3294	2.86 ± 0.1238	1.00 ± 0.0435	0.95 ± 0.0423
2	1.07 ± 0.0466	1.57 ± 0.0697	1.76 ± 0.0797	1.47 ± 0.0657	1.65 ± 0.0752	2.22 ± 0.0965	2.07 ± 0.0910	1.29 ± 0.0564	0.93 ± 0.0405
3	1.17 ± 0.0799	1.66 ± 0.1121	1.77 ± 0.1503	1.42 ± 0.0634	1.51 ± 0.1031	5.56 ± 0.3743	4.74 ± 0.2118	0.50 ± 0.0350	0.94 ± 0.0662

Table 2-2. Comparison of ^{59}Co(n,γ)^{60}Co reaction data

Experiment	A/FF	A/SB3	A/SB4	FF/SB3	FF/SB4	A/B	FF/B	B/SB1	SB1/SB2
1	1.00 ± 0.0352	1.50 ± 0.0513	1.66 ± 0.0558	1.50 ± 0.0496	1.66 ± 0.0539	2.95 ± 0.1085	2.95 ± 0.1055	1.01 ± 0.0357	0.87 ± 0.0281
2	0.97 ± 0.0600	1.33 ± 0.0794	1.48 ± 0.0903	1.37 ± 0.0837	1.52 ± 0.0951	1.89 ± 0.1147	1.94 ± 0.1208	1.32 ± 0.0828	0.87 ± 0.0539
3	0.91 ± 0.0566	1.16 ± 0.0719	1.31 ± 0.0652	1.28 ± 0.0791	1.44 ± 0.0717	6.89 ± 0.3411	7.58 ± 0.3752	0.30 ± 0.0150	0.86 ± 0.0430

Table 2-3. Comparison of ^{115}In(n,γ)^{116}In reaction data

Experiment	A/FF	A/SB3	A/SB4	FF/SB3	FF/SB4	A/B	FF/B	B/SB1	SB1/SB2
1	1.04 ± 0.0646	---	---	---	---	3.04 ± 0.1613	2.93 ± 0.1791	1.11 ± 0.0576	---
2	1.01 ± 0.0571	---	---	---	---	2.07 ± 0.1180	2.04 ± 0.1117	1.32 ± 0.0783	---
3	1.14 ± 0.0638	---	---	---	---	6.08 ± 0.3473	5.35 ± 0.3396	0.41 ± 0.0245	---

Table 2-4. Comparison of ^{56}Fe(n,p)^{56}Mn + ^{55}Mn(n,γ)^{56}Mn reaction data

Experiment	A/FF	A/SB3	A/SB4	FF/SB3	FF/SB4	A/B	FF/B	B/SB1	SB1/SB2
1	0.96 ± 0.0369	---	---	---	---	2.97 ± 0.1147	3.08 ± 0.1224	0.92 ± 0.0352	---
2	0.97 ± 0.0539	---	---	---	---	1.94 ± 0.1113	2.00 ± 0.0771	1.18 ± 0.0450	---
3	0.88 ± 0.0562	---	---	---	---	4.52 ± 0.2144	5.14 ± 0.3430	0.53 ± 0.0260	---

Table 2-5. Comparison of $^{58}Ni(n,p)^{58}Co$ reaction data

Experiment	A/FF	A/SB3	A/SB4	FF/SB3	FF/SB4	A/B	FF/B	B/SB1	SB1/SB2
1	1.11 ± 0.0486	4.43 ± 0.2027	4.31 ± 0.1943	4.01 ± 0.1859	3.90 ± 0.1782	6.77 ± 0.3051	6.13 ± 0.2799	3.00 ± 0.1454	2.43 ± 0.1326
2	1.08 ± 0.0487	3.92 ± 0.2766	3.75 ± 0.2736	3.62 ± 0.2548	3.46 ± 0.2521	5.40 ± 0.2455	4.99 ± 0.2251	3.93 ± 0.2030	1.70 ± 0.0882
3	1.20 ± 0.0542	---	---	---	---	---	---	---	---

Table 2-6. Comparison of $^{115}In(n,n'\gamma)^{115m}In$ reaction data

Experiment	A/FF	A/SB3	A/SB4	FF/SB3	FF/SB4	A/B	FF/B	B/SB1	SB1/SB2
1	1.17 ± 0.0523	---	---	---	---	6.71 ± 0.3068	5.74 ± 0.2658	2.28 ± 0.1060	---
2	1.17 ± 0.0571	---	---	---	---	6.49 ± 0.3393	5.54 ± 0.2903	2.91 ± 0.1515	---
3	1.18 ± 0.0818	---	---	---	---	2.42 ± 0.1074	2.05 ± 0.1421	6.99 ± 0.3425	---

Table 2-7. Comparison of $^{54}Fe(n,p)^{54}Mn$ reaction data

Experiment	A/FF	A/SB3	A/SB4	FF/SB3	FF/SB4	A/B	FF/B	B/SB1	SB1/SB2
1	1.05 ± 0.0603	---	---	---	---	6.63 ± 0.3674	6.31 ± 0.3564	2.94 ± 0.2446	---
2	---	---	---	---	---	---	---	---	---
3	---	---	---	---	---	---	---	---	---

Table 2-8. Comparison of $^{24}Mg(n,p)^{24}Na$ reaction data

Experiment	A/FF	A/SB3	A/SB4	FF/SB3	FF/SB4	A/B	FF/B	B/SB1	SB1/SB2
1	1.03 ± 0.0572	---	---	---	---	6.11 ± 0.5073	5.91 ± 0.4989	---	---
2	0.94 ± 0.0775	---	---	---	---	4.49 ± 0.5362	4.78 ± 0.6380	4.58 ± 0.5895	---
3	1.10 ± 0.1310	---	---	---	---	2.11 ± 0.2246	1.91 ± 0.1964	---	---

Table 2-9. Comparison of Al_2O_3 doses

Experiment	A/FF	A/SB3	A/SB4	FF/SB3	FF/SB4	A/B	FF/B	B/SB1	SB1/SB2
1	1.78 ± 0.1183	3.76 ± 0.1882	3.53 ± 0.2602	2.11 ± 0.1172	1.99 ± 0.1538	8.06 ± 0.4482	4.54 ± 0.2743	1.41 ± 0.0742	1.32 ± 0.0667
2	1.46 ± 0.1024	1.95 ± 0.1675	1.05 ± 0.0687	1.34 ± 0.1179	0.72 ± 0.0493	1.49 ± 0.0769	1.02 ± 0.0565	---	---
3	1.10 ± 0.1602	5.24 ± 0.6661	4.64 ± 0.3776	4.74 ± 0.8629	4.20 ± 0.6448	1.68 ± 0.1868	1.52 ± 0.2603	---	---

Table 2-10. Comparison of HBG doses

Experiment	A/FF	A/SB3	A/SB4	FF/SB3	FF/SB4	A/B	FF/B	B/SB1	SB1/SB2
1	1.20 ± 0.1019	---	---	---	---	6.90 ± 0.5854	5.74 ± 0.4874	1.52 ± 0.1288	1.45 ± 0.1228
2	1.39 ± 0.1183	---	---	---	---	1.71 ± 0.1451	1.23 ± 0.1040	1.54 ± 0.1309	1.15 ± 0.0975
3	1.11 ± 0.0945	---	---	---	---	1.70 ± 0.1440	1.52 ± 0.1293	15.69 ± 1.3316	1.76 ± 0.1490

Table 2-11. Comparison of DXT doses

Experiment	A/FF	A/SB3	A/SB4	FF/SB3	FF/SB4	A/B	FF/B	B/SB1	SB1/SB2
1	1.21 ± 0.1024	---	---	---	---	9.15 ± 0.7761	7.58 ± 0.6433	1.58 ± 0.1344	1.23 ± 0.1040
2	1.73 ± 0.1469	---	---	---	---	1.78 ± 0.1510	1.03 ± 0.0872	1.54 ± 0.1311	1.26 ± 0.1071
3	1.27 ± 0.1080	---	---	---	---	2.02 ± 0.1714	1.59 ± 0.1346	19.18 ± 1.6279	1.23 ± 0.1048

2.1.1 Analysis of the Experiment 2 Measured Data – The trends of the ratios in Table 2-1 through Table 2-11 concerning the measured data of this benchmark (experiment 2) mostly meet the expectations described in the previous section. This is true for the neutron activation foil measurements, so none of these measurements will be rejected based on comparison of the measured data.

There is some question regarding the TLD doses. The dose at the collimator B location, free field location, and scattering box position 4 are all inconsistent when comparing the measured values for each TLD type, but based on the calculated ratios, these measured values do not seem anymore inconsistent than the TLD measurements in experiments 1 and 3. Therefore, these TLD dose measurements have not been rejected based on the data in Table 1-28 and Table 2-1 through Table 2-11.

2.1.2 Analysis of the Experiment 2 Measured Data Uncertainties – The uncertainties reported in Table 1-27 are the only uncertainties presented by the dosimetrists for the foil activation measurements, and no discussion of the uncertainties is provided. The evaluators believe the dosimetrists intended for these uncertainties to represent the total measurement uncertainty, but the evaluators also believe these uncertainties only represent the statistical uncertainties associated with the measurement of the activity produced in the neutron activation foils. If this is the case, it is possible that these uncertainties under predict the uncertainty associated with the activity measurements by excluding other possible uncertainties such as foil mass uncertainty and half-life uncertainty. After consideration of these uncertainties provided by the dosimetrist, the evaluators do not think that the reported uncertainties associated with the activity measurements significantly under predicted the uncertainty of the activity measurements. Therefore, the uncertainties reported in Table 1-27 will be treated as the uncertainties associated with the activity measurements.

Similarly, the uncertainties reported in Table 1-28 are the only uncertainties presented by the dosimetrists for the measurement of absorbed dose by the TLDs, and no discussion of the uncertainties is provided. Again, the evaluators think the dosimetrists intended for these uncertainties to represent the measurement uncertainty, but the evaluators also think that these uncertainties only represent the statistical uncertainties associated with the TLD measurements. Exceptions to the possibility of under predicting the measurement uncertainty are the Al_2O_3 TLDs in collimator B and at scattering box position 4. This is based on analysis performed to estimate the typical measurement uncertainty associated with the ORNL HBG dosimeters,[a] previous measurements with the Al_2O_3 dosimeter at the SILENE facility[b] and standard ISO/ASTM 51956 for TLD systems.[c] The ASTM standard states that the measurement uncertainty should be in the range of 6 to 13 percent (2-sigma) if best practices are followed by the dosimetry program. The evaluation of the Al_2O_3 and

[a] Stanford Dosimetry, "Uncertainty Analysis of the Oak Ridge National Laboratory Harshaw Whole Body Dosimeter," Stanford Dosimetry, LLC (2009).
[b] E. Gaillard-Lecanu, et. al., "Franco-Russian comparison of mixed neutron and gamma radiation field dosimeters at the Silene reactor," Radiation Measurements, **33**, p. 859 (2001).
[c] ISO/ASTM, "Standard Practice for Use of Thermoluminescence-Dosimetry System (TLD System) for Radiation Processing," ISO/ASTM 51956:2013(E) (2013).

HBG dosimeters both estimated the measurement uncertainty to be about 10 percent (2-sigma) for doses on the order of magnitude delivered in this experiment. In addition to statistical uncertainties, these other studies evaluated the uncertainty related to the source spectra being different from the TLD calibration spectrum, uncertainty in the calibration source, and measurement repeatability. Therefore, the evaluators have decided to use a measurement relative uncertainty of 10 percent (2-sigma) for the TLD dose measurements reported in Table 1-28 instead of the values that appear in that table. Again, exceptions to this are the Al_2O_3 TLDs in collimator B and at scattering box position 4. The uncertainty reported by the dosimetrist for the Al_2O_3 TLD in collimator B, 20 percent (2-sigma), will be used. This uncertainty represents the upper limit of the measurement uncertainty that the evaluators are willing to accept. Therefore, the Al_2O_3 TLD measurement at scattering box position 4, with 45 percent (2-simga) uncertainty, is rejected by the evaluators.

2.2 Missing and Contradictory Data and Resolution of These Data

There are a few pieces of missing and contradictory data, some of which can have a statistically significant impact on this benchmark. Statistically significant means that statistically different results can be simulated, with Monte Carlo uncertainties less than 1 percent, when using different values for the contradictory data or different assumptions for the missing data. The following subsections discuss these data and provide a clear explanation of how these issues have been resolved.

2.2.1 SILENE Room – No measurement of the temperature, pressure, or humidity was made within the SILENE room during the experiments. Climate control equipment was operating during the entire experiment, so standard room temperature is a reasonable approximation, 20 °C. According to ANSI/ASHRAE 55-1992,[a] typical humidity within a climate control area should range from 30 to 60 percent relative humidity depending on the season and whether the climate control equipment is heating or cooling. The assumed relative humidity during this experiment was 50%. The composition of air at 20 °C, 500 m elevation (approximate elevation of Valduc and SILENE), and 50% relative humidity is given in Table 2-12. Note that the density of dry air at sea level is approximately 1.205×10^{-3} g/cm^3.

Table 2-12. SILENE room air composition

Element	Weight percent
H	0.085570
C	0.012305
N	74.949239
O	23.679995
Ar	1.272891
Density	1.129858×10^{-3} g/cm^3

2.2.2 Collimator Boxes – No chemical analysis is available for the lead and copper layers within the collimator boxes, so these materials are assumed to consist of natural compositions and theoretical densities 11.344 g/cm^3 and 8.92 g/cm^3, respectively.

2.2.3 Free Field Location – No information is available about the exact compositions of the free field location stand. The aluminum portion of the stand is assumed to be natural aluminum (density 2.702 g/cm^3), the steel base is assumed to be S235JR (Table 1-2), and the concrete in the base is assumed to be SILENE concrete (Table 1-1).

[a] ANSI/ASHRAE, "Thermal Environmental Conditions for Human Occupancy," Standard 55-1992 (1992).

2.2.4 Scattering Box Detector Mounting Plate – No chemical analysis has been performed on the detector mounting plates within the scattering box. These plates are assumed to be natural aluminum with a density of 2.702 g/cm^3.

2.2.5 SILENE Diagnostics – The exact composition of the polyethylene moderator surrounding each SILENE diagnostic detector is unknown, so it is assumed that the density is 0.955 g/cm^3. These cylindrical moderators sit atop a small steel pedestal and steel table. The composition of the small pedestal is unknown and is assumed to be S235JR (Table 1-2).

2.2.6 Neutron Activation Foil – No chemical analysis was performed for any of the titanium foils. Therefore, the titanium foils are assumed to be natural composition without impurities and theoretical density (4.5 g/cm^3).

2.2.7 Concrete Data – The largest source of missing and contradictory data is that of material compositions. Ideally a chemical analysis would exist for each material in the experiment. However, as evident in section 1.0, most materials are described using the standard definition of that material. Ironically, the concrete shield blocks all have a chemical analysis report, but these represent the largest source of missing and contradictory information. The magnetite (Table 1-7), and standard (Table 1-5) concrete compositions all report the boron weight percent as <0.1 and the chlorine weight percent as <0.01.

The concrete shielding material known as colemanite concrete was not used in this experiment. However, some colemanite concrete was acquired at the same time as the magnetite and standard concrete. Colemanite is an ore that naturally contains boron. The chemical analyses of these three concretes were performed at the same time by LERM, and it is believed that the analyses were performed for a standard set of elements. If an element was not detected in the analysis, it was reported as less than the detectable limit. LERM expected to detect boron in the colemanite concrete, so boron was included in the set of elements being analyzed. Not knowing how much boron and chlorine are present in these concretes is problematic because they are both strong thermal neutron absorbers. To illustrate the impact that boron can have, the C/E ratios of the thermal reactions in collimator B and at scattering box location 1 of ALARM-TRAN-AIR-SHIELD-001 vary by as much as a factor of 2.0 when comparing concrete shields with 0.0 and 0.1 weight percent boron. This variation elucidated the need to better quantify the amount of boron and chlorine present in each type of concrete. Consultation with concrete experts at CEA Saclay and ORNL[a] led to the initial belief that boron is not typically in concrete unless it has been explicitly included as an aggregate material, like in colemanite or priceite concrete, which is usually done for the purposes of shielding neutrons. Further consultation with PNNL-15870 Rev. 1,[b] which provides 26 example concrete compositions, showed that boron is not present in concrete unless it is explicitly added via the aggregate. Therefore, the evaluators have decided to treat the <0.1 weight percent boron in the magnetite and standard concrete as 0.0 weight percent. The same conclusion could not be drawn concerning chlorine because a few of the example compositions reviewed did contain chlorine. Therefore, the chlorine composition of <0.01 weight percent will be treated as 0.005 ± 0.005 weight percent, which follows the guidance of the ICSBEP Guide to the Expression of Uncertainties.[c] It seems likely that the presence of chlorine could depend on the amount of chlorine present in the water added to the concrete mix.

[a] Yann Le Pape, Personal communication / email, February 15, 2015.
[b] R. J. McConn, et. al., "Compendium of Material Composition Data for Radiation Transport Modeling," PNNL-15870 Rev. 1, Pacific Northwest National Laboratory, 2011.
[c] V. F. Dean, Ed., "ICSBEP Guide to the Expression of Uncertainties," NEA/NSC/DOC(95)03, Organization for Economic Co-operation and Development—Nuclear Energy Agency, 2009.

The oxygen weight percentage is missing from these concrete compositions, as well. Since oxygen is present in all concrete compositions, it was assumed that the oxygen weight percentage would make up the balance of the compositions. The oxygen weight percent is equal to 100 minus the sum of the other reported weight percentages. Therefore, the oxygen weight percent in the magnetite and standard concrete are 33.435 and 48.965, respectively.

The final inconsistency concerning the concrete compositions concerns their density. The densities reported in Section 1.0 are based on the analysis performed by Soutrenon (standard 2.3 g/cm^3 and magnetite 3.9 g/cm^3). This analysis was performed on samples of concrete, presumably from the same batch used to create the shielding blocks used in this experiment, and not the actual shielding blocks themselves. Shortly after the experiment, the masses of the concrete shield blocks were measured for the purpose of updating the concrete densities due to a few years of potential water loss (drying) since the Soutrenon analysis. The reported results, including the steel frame, were 535 kg and 845.5 kg for the standard and magnetite concretes, respectively, and the measurement uncertainty was ±1 kg. These masses represent the measurement of a single block, not the average of all blocks used. The mass of the steel frame in the benchmark model is approximately 97.908 kg, and the volume of the concrete portion of these blocks in the benchmark model is 2e5 cm^3. Subtracting the steel frame benchmark mass from the measured concrete block masses and dividing by the benchmark concrete block volume produces estimates of the concrete density: 2.19 g/cm^3 and 3.74 g/cm^3 for the standard and magnetite concretes, respectively. The trend for the standard and magnetite concrete was expected, and the mass and density had decreased over time. In the end, the evaluators decided to use the concrete densities provided by Soutrenon for the benchmark values. The details of this decision are fully explained in ALARM-TRAN-AIR-SHIELD-001.

2.2.8 Plastic Bags in the Scattering Box – The foils mounted in the scattering box were placed inside thin plastic bags, which were taped to the aluminum mounting plates that were taped to the scattering box concrete shield blocks. These bags can be seen in Figure 1-72, Figure 1-74, and Figure 1-76. The experimentalists assumed that this thin plastic bag would have no impact on the measured data. Therefore, no data were collected concerning the plastic bags (i.e., thickness and composition). This assumption appears to be true for *one* plastic bag. However, each foil in the scattering box was mounted using its own individual plastic bag, so for position 1 within the scattering box, seven plastic bags were used. Use of multiple plastic bags layered on top of each other to mount the foils resulted in varying amounts of plastic surrounding each foil. The cobalt foil at position 1 of the scattering box (bottom right of Figure 1-72) has one layer of plastic between it and the aluminum mounting plate. Here one layer of plastic means half or one wall of a plastic bag, so two layers is the entire thickness of a plastic bag. Alternatively, the nickel foil (top left of Figure 1-72) has 13 layers of plastic between it and the aluminum mounting plate. Furthermore, the top portion of the plastic bags have been folded up and taped to the aluminum mounting plate just above the neutron activation foils (Figure 1-72). The evaluators set out to determine whether this additional plastic would impact the measurements in this experiment, even though the composition and wall thickness of the bags were unknown. Research into commonly used plastic bags of this size in the US revealed that these bags are usually made of polyethylene (theoretical density of 0.92 g/cm^3). It was also found that the wall thickness of these bags is typically between 0.00127 and 0.01016 cm (0.5 and 4 mils), so the total thickness is between 0.00254 and 0.02032 cm. To investigate the possible impact of these plastic bags, the neutron activation foils in the scattering box were placed inside a polyethylene box whose dimensions varied between position 1 and the other positions. The thickness of the polyethylene facing inside the scattering box for all positions was 0.00508 cm (2 mils). The thickness of the polyethylene on the other five sides of this box of plastic was 0.06604 cm (26 mils) for position 1 and 0.0254 cm (10 mils) for the other positions. The addition of this polyethylene caused changes in the calculated neutron activation between 0.5 and 2.0 percent for the position 1 foils and between 0.04 and 2.0 percent for the foils in the other positions. The evaluators have determined that there is not enough information available to model these plastic bags exactly and to make an exact

estimate of their effect. Therefore, instead of performing a detailed and simplified analysis of these plastic bags and adjusting the benchmark values to account for this simplification (bias), the evaluators have decided to include an uncertainty of 2.0 percent (1-sigma) to account for the plastic bags. This additional uncertainty is based on the analysis presented above that used a best estimate plastic bag wall thickness of 0.00508 cm (2 mils). The additional 2.0 percent experimental uncertainty is equal to the largest change between the activation with and without the plastic bags, whose Monte Carlo simulations had a 1-sigma uncertainty less than 1 percent.

2.3 Uncertainty of the SILENE Fission Source

One of the uncertainties in this experiment that has the largest impact is the uncertainty of the number of fission events that occurred. All of the simulations of the benchmark model use the number of fission events as a normalization factor. Therefore, the uncertainties of the simulation results of the benchmark model are directly proportional to the uncertainty of the number of fission events. Unfortunately, the measurement of the number of fission events was not accompanied by an exact uncertainty. However, Valduc has provided information about other methods used to measure the number of fission events in SILENE in the past, and these measurements include uncertainties that will be used as an educated guess of the uncertainty for this experiment. Past measurements of the number of fissions via radiochemical analysis have produced uncertainties of 0.08 and 1.6 percent (1-sigma) for a lead reflected and unreflected geometry, respectively.[a] For the same experiments, the number of fissions was estimated by thermal balance (temperature change in the fuel solution), and the uncertainty was 5.9 percent (1-sigma) for both the lead reflected and unreflected cases. The detector diagnostics (Figure 1-51) used to measure the number of fissions for this experiment were also used in these past experiments with and without the lead reflector. However, as in this experiment, the uncertainty for the number of fissions measured by the detector diagnostics in these past experiments was not reported. In these past experiments, the bias between the number of fissions measured by radiochemistry and the detector diagnostics is 2.8 and 3.9 percent for the lead reflected and unreflected geometries, respectively. The small bias between the radiochemistry estimate and detector diagnostics estimate gives confidence in the detector diagnostic results, but it does not define the uncertainty. The experimenters recommend an uncertainty in the range of 4 or 5 percent (1-sigma). The evaluators believe the best estimate of the uncertainty for the number of fissions is equal to 6 percent (1-sigma). This uncertainty is more than twice the uncertainty associated with the radiochemical measurement from these previous experiments, roughly equal to the uncertainty for the thermal balance measurement from the previous experiments, larger than the reported bias for these previous experiments, and is larger than the difference between the two measurements of the number of fissions discussed in Section 1.7.

2.3.1 Propagation of Fixed Source Uncertainties – Some of the simulation results presented in Section 4.0 are based on a two-step method to simulate this experiment. Step one is an eigenvalue simulation that tallies the spatial distribution and energy distribution of fission neutrons. Step two converts the tally from step one to a source, which is then used in a fixed-source simulation to calculate the detector responses. More details are given in Section 4.0, and this brief introduction provides some background on how uncertainties due to the fixed source were minimized. No uncertainty contributions are being added to the simulations of the benchmark in this evaluation due to the fixed source because all the examples in Section 4.0 made efforts to minimize the tally uncertainties in step one of the two-step method that would propagate to step two. If a fixed source were created that is different from the examples discussed in this section and Section 4.0, then the results of the discussion in the section may not apply. The remainder of this section

[a] K. Hamon, "Etalonnage du réacteur SILENE," Commissariat à l'Énergie Atomique - Centre d'etudes de Valduc, Department de recherche en Neutronique et Criticite, CEA Valduc, 2004.

summarizes how this topic was investigated in ALARM-TRAN-AIR-SHIELD-001, which is also applicable to this benchmark.

The fixed source, described in Section 4.1 of ALARM-TRAN-AIR-SHIELD-001 and used with the MCNP simulations, was originally calculated using the SCALE[a] 200 neutron group energy structure and a spatial mesh in cylindrical coordinates with cells of equal volume, approximately 16 cm^3. These cylindrical cells have only 1 azimuthal bin, so the source is assumed to be azimuthally symmetric. The discretization was refined to reduce the magnitude of errors propagating from the tally of the eigenvalue simulation to the source of the fixed-source simulation. The fixed source described in Section 4.0 uses 1006 neutron groups, each of the SCALE 200 neutron energy group structure split into 5 subgroups, one group from 0 MeV to the minimum energy of the 200 group structure, and five 2 MeV wide groups from 20 to 30 MeV. The volume of the cells in the cylindrical mesh was reduced to approximately 8 cm^3 by including additional intervals in the radial direction.

Great efforts were also made to ensure the tally data from the eigenvalue simulation were well converged so as to reduce the Monte Carlo uncertainties that might propagate from the eigenvalue simulation to the fixed-source simulation. The tally of the fission neutron energy distribution had large uncertainties, greater than 5 percent, at low energies (< 50 eV) and high energies (> 20 MeV). However, not many fission neutrons are born below or above these energies, so it is not likely that these errors will cause problems for the fixed-source simulations. Between 50 eV and 20 MeV the errors become very small, 0.01 percent at 1 MeV. All tally bins of the fission neutron energy distribution with uncertainties greater than 20 percent were ignored and assigned a value of zero in the fission neutron energy distribution for the fixed source presented in Section 4.0. The largest uncertainty in the mesh tally used to create the fission neutron spatial distribution is slightly less than 0.25 percent. The evaluators believe that these small Monte Carlo uncertainties provide a discretized fixed source that will not contribute much to the overall uncertainty of the benchmark simulations. It is believed that the contribution to the overall uncertainty by this source is the same size or smaller than the uncertainty contributed to a tally in an eigenvalue simulation due to the correlation between starting points in fission neutron generations, which is usually unquantified.

To test the fidelity of the fixed source, four MCNP simulations were run to compare the ALARM-TRAN-AIR-SHIELD-001 collimator A tally results (all neutron and gamma tallies in collimator A):

- Simulation 1 – 1,006 energy groups with 8 cm^3 cylindrical mesh cells (highest fidelity)
- Simulation 2 – 1,006 energy groups with 16 cm^3 cylindrical mesh cells
- Simulation 3 – 200 energy groups with 8 cm^3 cylindrical mesh cells
- Simulation 4 – 200 energy groups with 16 cm^3 cylindrical mesh cells (lowest fidelity)

These four simulations all produced ALARM-TRAN-AIR-SHIELD-001 collimator A tally results that were statistically the same when the Monte Carlo uncertainties were less than 1 percent. This comparison provides some confidence that the coarse energy and spatial mesh are adequate. However, the fixed source with the finest energy and spatial fidelity is provided in ALARM-TRAN-AIR-SHIELD-001. Similarly, the MCNP benchmark model presented in Section 4.0 of this evaluation uses 1,006 neutron energy groups and spatial cells that are about 8 cm^3 to ensure that the uncertainty due to the discretization of the fixed source is negligible in this benchmark as well.

[a] SCALE Development Team, "SCALE: A Comprehensive Modeling and Simulation Suite for Nuclear Safety Analysis and Design," ORNL/TM-2005/39, Version 6.2, Oak Ridge National Laboratory, April 2016.

SCALE simulations were performed by the evaluators using a different discretization for the fixed-source, but they still produced similar computational results. The discretization scheme for the SCALE simulations uses the 200 neutron energy group structure for the energy distribution and a Cartesian mesh with cells of equal volume, approximately 1 cm^3. This Cartesian mesh captures any azimuthal asymmetries that have been averaged out by the fixed source presented in Section 4.0.

2.3.2 Uranyl Nitrate Solution Isotopic Uncertainties – In Section 1.4.4, the uranium atom percentages of the fuel are presented in Table 1-12. This section also explains that the solution was last reprocessed in 1999, so the fuel used in this experiment contained fission products, daughters of fission products, and activation products, so the atom percentages in Table 1-13 are not exactly correct. The evaluators determined that the number of fission events since the solution was last reprocessed in 1999, 2.961e19, is small compared to the number of uranium atoms in SILENE during this experiment, approximately 6.081e24 (5.636e24 ^{235}U and 3.936e23 ^{238}U). Furthermore, not all of the solution available for SILENE experiments was used during this experiment. The concentration of fission and activation products is diluted after each experiment when the solution in SILENE is drained back into the solution storage tanks. Therefore, the change in uranium atom percentages and the addition of fission products and activation products are negligible, and any associated changes in uncertainties are negligible as well. The addition of fission and activation products in the fuel solution does not statistically change any tally results with Monte Carlo uncertainties less than 1 percent.

2.4 Experimental and Benchmark Model Parameter Uncertainties

The following subsections provide details about the uncertainties of the individual parameters evaluated in the sensitivity / uncertainty analysis summarized in Section 2.5

2.4.1 Geometric Dimension Uncertainties – Similar uncertainties were assigned to several dimensions in the benchmark model. Unless a specific dimension and uncertainty is discussed in the subsections following this one, these uncertainties apply.

Large distances, greater than 50 to 100 cm, were measured using a laser distance measuring device. These devices usually have an uncertainty of a couple of millimeters or less. This experiment showed that repeated measurements of distance from one location to another would often vary by several millimeters. It was decided this was because the surfaces between which the distance was being measured were not perfectly parallel. One obvious example of this is the distance between any piece of equipment and the outside of the cylindrical SILENE reactor. Therefore, the uncertainty assigned to these distances is ±1 cm.

Smaller distances, less than 50 to 100 cm, were measured using a meter stick or measuring tape where the smallest increment was millimeters. Also, some smaller dimensions were taken from drawings of equipment, like the SILENE reactor and the collimator boxes. These dimensions are expected to be accurate within ±0.5 mm, so an uncertainty of $0.5/\sqrt{3}$ mm was assigned.

2.4.2 Material Density Uncertainties – Similar uncertainties were assigned to several material densities in the benchmark model. Unless a specific density and uncertainty is discussed in the subsections following this one, these uncertainties apply.

Several materials had their masses measured to determine the density, but no uncertainty was provided with the mass measurement. In these cases, a recommendation from the "ICSBEP Guide to the Expression of Uncertainties" is applied with a slight modification. If no uncertainty is provided, this recommendation suggests using an uncertainty that is half the last significant figure provided for a parameter. For example, if

a density for lead were 11.344 g/cm^3, then an uncertainty of 0.0005 g/cm^3 (half of 0.001 g/cm^3) could be assumed. This approximation can produce very small uncertainties, so in order to reduce the possibility of underestimating the uncertainty, half of the last *actual* digit, not the last significant digit, is going to be applied as the uncertainty. Returning to the lead example, the uncertainty is assumed to be 0.004 / 2 = 0.002 g/cm^3.

Several other materials did not have their masses measured to determine the density, and no uncertainty was provided. Most of these materials use a composition defined by a material standard provided in Sect. 1.0, along with a theoretical density. Since the actual density is unknown and no uncertainty is provided, the same recommendation from the "ICSBEP Guide to the Expression of Uncertainties" mentioned in the previous paragraph was considered. However, actual material densities often vary significantly from their theoretical densities, so the evaluators assumed that theoretical densities are only accurate to the smallest whole number (the digit to the left of the decimal point). Therefore, the recommendation provided by the "ICSBEP Guide to the Expression of Uncertainties" is applied to the *actual* digits following the decimal point, not just the last significant digit. For example, consider lead, but now with a theoretical density of 11.344 g/cm^3. The assumed uncertainty is 0.344 / 2 = 0.172 g/cm^3.

2.4.3 Material Elemental Composition Uncertainties – All uncertainties on material compositions will use the expressions discussed in this section unless one of the following subsections discusses a specific material and provides a composition uncertainty. These uncertainties are all based on advice in the "ICSBEP Guide to the Expression of Uncertainties."

If a composition defined by a material standard defines an element range [a, b] of possible weight percentages, the benchmark model has used the midpoint of the range for the elemental weight percent. The applied uncertainty is $(b-a)/(2\sqrt{3})$.

If a composition defined by a material standard defines a maximum element weight percent ($\leq$ x), the benchmark model uses $2x/3$ as the element weight percent. The applied uncertainty is $x/\sqrt{18}$.

If a chemical analysis of a material provides the minimum detectable limit of an element (< x), the benchmark model uses $x/2$ as the element weight percent. The applied uncertainty is also $x/2$, i.e., the 2-sigma uncertainty is equal to the minimum detectable limit of the element.

Any other compositions, which are usually defined with a specific weight percentage, are believed to be accurate to two significant figures. To determine the uncertainty, the method applied to material densities in Section 2.4.2 is used. In this case, the uncertainty will equal half of the last significant digit and the next digit. For example a weight percentage of 0.721 will have an uncertainty of 0.021 / 2.

One exception to this discussion of material uncertainties concerns boron in the magnetite and standard concrete shield blocks. This exception is discussed in Section 2.2.7.

2.4.4 Shielding Blocks Composition Uncertainties – The elemental weight percentages of the magnetite and standard concrete compositions used in this benchmark are believed to have uncertainties of 0.005 weight percent. This applies to elements that are not defined by a minimum detectable limit (< x). The uncertainty associated with the density of the concrete shield blocks is assumed to be 5 percent. This is based on the discussion of mass and density of the shield blocks in Section 2.2.7 of ALARM-TRAN-AIR-SHIELD-001.

2.4.5 Shielding Blocks Orientation Uncertainties – The uncertainties associated with the dimensions of the concrete shield blocks used to construct the scattering box follow the logic described in Section 2.4.1. The orientation of the shielding blocks is related to this uncertainty, which refers to the angle between all of these blocks of concrete. The benchmark model describes the scattering box as though there is a 90 or 180 degree angle between all of the blocks of concrete. Section 1.2.6 discusses the gaps between the concrete shield blocks and the fact that the blocks do not fit together perfectly. Therefore, an uncertainty of 1 degree associated with the orientation of each concrete shield block in the scattering box is assumed.

2.4.6 PPB9 Uncertainties – PPB9 is similar to concrete in that a dry mixture and water are combined to create a wet paste which will dry, harden, and assume the shape of the container in which it dries. Therefore, the composition of PPB9, particularly the density and water content, changes as a function of time. The chemical analysis of PPB9 presented in Appendix H provides the composition and density at 3 unique stages, which are after mixing but before drying, after drying under normal conditions, and then after heating above 110 °C. The composition used in the benchmark model is the composition that exists after drying under normal conditions. However, the other two compositions represent the highest water content (before drying) and lowest water content (after heating). All composition uncertainties associated with the PPB9, including density, will use the range between the highest and lowest water content, [a, b]. The actual uncertainty applied to parameter x, following advice from the "ICSBEP Guide to the Expression of Uncertainties," is

$$\Delta x = \frac{h}{\sqrt{3}}\left[1 - \left(\frac{\langle x\rangle - x_{mid}}{h}\right)^2\right],$$

where $\langle x\rangle$ is the value used in the benchmark model (after drying under normal conditions), $x_{mid} = \frac{b+a}{2}$, and $h = \frac{b-a}{2}$. Here a and b represent the values of parameter x at the extremes, before drying and after heating, respectively.

2.4.7 Uranyl Nitrate Solution Uncertainties – Several parameters of the uranyl nitrate solution were reported by Valduc along with their respective uncertainties. The uncertainty of the uranium concentration in the solution is 0.05 g/L, and the uncertainty of the solution density is 0.00003 g/cm^3. The reported uncertainty of the acid molarity (both H^+ and NO_3^-) is 0.03 moles/L. The enrichment was reported in units of atom percent, and the ^{235}U content has an uncertainty of 0.02 percent (0.000015 weight fraction).

Section 1.7 notes that just before the critical excursion, the solution was about 20.21 degrees Celsius and the maximum solution temperature recorded during the critical excursion was about 73.66 degrees Celsius. Clearly the temperature of the solution changed during the critical excursion, but it is unknown exactly what the temperature was as a function of time as the fission events occurred. The evaluators have assumed that the temperature of the solution increased linearly with time (a right triangular distribution) between 20.21 and 73.66 degrees Celsius during the excursion. Following the guidance of the "ICSBEP Guide to the Expression of Uncertainties" for a triangular distribution from 20.21 to 73.66 degrees Celsius, where the most probable temperature is 20.21 degrees Celsius, a temperature uncertainty of $\Delta T/\sqrt{18}$ (12.6 degrees) will be applied. It is important to note this temperature uncertainty only applies to the fuel solution. All other temperatures are constant.

The density uncertainty provided by Valduc (0.00003 g/cm^3) only pertains to the ability to measure the density of the fuel solution. In reality there is a larger uncertainty associated with the density of the solution due to a change in the volume of the solution, which changes because of the change in temperature and

fission product and radiolytic gases. Previous work[a] has shown that a reasonable decrease in density (increase in volume) expected for this excursion is between 1.5 and 2 percent. Similar to the solution temperature uncertainty discussed previously, the evaluators have assumed that the fuel solution density decreased linearly with time during the excursion (a right triangular distribution). Therefore, the solution density is distributed between 1.15624 and 1.13312 g/cm^3, where the most probable density is 1.15624, which results in a density uncertainty of $0.02 * \rho/\sqrt{18}$ = 0.00545 g/cm^3.

The height of the solution was reported without an uncertainty. The uncertainty of the solution height will use the same value as ALARM-TRAN-AIR-SHIELD-001, 0.0005 cm.

2.4.8 Neutron Activation Foils Uncertainties – Finally, several parameters of the neutron activation foils had reported uncertainties or tolerances. All of the neutron activation foils have a 10 percent tolerance on thickness. Therefore, the uncertainty on foil thickness, t, is $(0.1 * t)/\sqrt{3}$ cm. Foils with *A10* in their Table 1-14 reference name have a diameter tolerance of ±0.2 mm. All the other foils have a diameter tolerance of ±0.5 mm. The uncertainty applied to diameter is $0.2/\sqrt{3}$ mm for the *A10* foils and $0.5/\sqrt{3}$ mm for the remaining foils. The uncertainty of the mass measurement of the foils is 0.2 percent.

2.5 Evaluation of the Experimental Data Uncertainties

Below is an evaluation of the experimental data uncertainties, which are grouped together in subsections by case number / measurement location. In this section, only the total experimental uncertainty for each measurement is presented. This section presents a summary of the entire sensitivity / uncertainty analysis. The detailed results of the sensitivity / uncertainty analysis with the uncertainty contribution of each individual experimental parameter analyzed are presented in Appendix I. The results of this sensitivity uncertainty analysis show that all detectors and reactions analyzed in this section have sufficiently small experimental uncertainties and therefore are acceptable as benchmark data.

In order to calculate the total experimental uncertainty for detector d, σ_{tot}^{d}, the uncertainty of each individual experimental parameter must first be established, σ_i (Sections 2.2 through 2.4). These parameters are then perturbed and the absolute sensitivity of detector d with respect to experimental parameter i, S_i^d, is calculated. The uncertainty of detector d due to experimental parameter i, σ_i^d, is the product of the absolute sensitivity of detector d with respect to experimental parameter i and the uncertainty of experimental parameter i. The total experimental uncertainty of detector d is calculated by summing in quadrature the uncertainty of detector d due to each experimental parameter i; note this assumes all the experimental parameters are uncorrelated. This method to evaluate the total experimental uncertainty is shown below mathematically.

$$S_i^d = \frac{\Delta d}{\Delta x_i} \qquad \sigma_i^d = S_i^d * \sigma_i \qquad \sigma_{tot}^d = \sqrt{\sum_i \left(\sigma_i^d\right)^2}$$

[a] S. Sakurai, et. al., "Density Equations of $UO_2(NO_3)_2$-HNO_3 and $UO_2(NO_3)_2$-$Gd(NO_3)_3$-HNO_3 Solutions," Journal of Nuclear Science and Technology, vol. 24[5], p. 415, 1987.

2.5.1 Uncertainty Dependencies – The first step of the uncertainty analysis in ALARM-TRAN-AIR-SHIELD-001 was to determine the parts of the benchmark model that the measurement locations were sensitive to, which was done in a gross manner by simply removing one item at a time from the benchmark model and then recalculating the detector responses. If there was no statistical difference in the detector responses with and without an item, then those detector responses were not sensitive to that part of the benchmark model. Note that this statistical comparison was made with Monte Carlo results that all had a statistical uncertainty of less than 1 percent (1-sigma). If no detector was sensitive to a part of the benchmark model, then that item was removed. If at least one detector was sensitive to a part of the benchmark model, then that item was not removed. However, if an item was left in the benchmark model, the results of this gross sensitivity calculation were used to guide the detailed uncertainty analysis. For example, all of the detectors are sensitive to portions of the SILENE critical assembly. Therefore, absolute sensitivity coefficients were calculated for all the detectors with respect to the critical assembly, and the SILENE assembly makes a contribution to the experimental uncertainties of every detector. On the other hand, the detectors inside the scattering box are not sensitive to the components inside collimator B. Therefore, the experimental uncertainties for detectors inside the scattering box do not include contributions from collimator B. Table 2-13 presents the results of the gross sensitivity analysis from ALARM-TRAN-AIR-SHIELD-001. The dependencies that applied in ALARM-TRAN-AIR-SHIELD-001 are assumed to still apply in this benchmark evaluation. This is a valid assumption because the significant changes between ALARM-TRAN-AIR-SHIELD-001 and this benchmark (the addition of the lead shield and standard concrete in front of collimator B) are very unlikely to create new dependencies or increase the sensitives observed in ALARM-TRAN-AIR-SHIELD-001. Rather, these changes seem likely to reduce the observed sensitives and remove some of the dependencies. The data in Table 2-13, from ALARM-TRAN-AIR-SHIELD-001 will also be used as the starting point of the sensitivity / uncertainty analysis of this benchmark.

ALARM-TRAN-PB-SHIELD-001

Table 2-13. Sensitivity / Uncertainty dependency table

Benchmark model feature	CA	CB	FF	SB1	SB2	SB3	SB4
Detector diagnostics	N	N	N	N	N	N	N
Roof crane assembly	N	N	Y	Y	Y	Y	Y
Concrete walls, floor, and doors	Y	Y	Y	Y	Y	Y	Y
SILENE assembly wall	Y	Y	Y	Y	Y	Y	Y
Control rod	N	N	N	N	N	N	N
Foil holder handle, hook, and legs	N	N	N	N	N	N	N
Foil holder cover, body, and back	Y	Y	Y	N	N	N	N
Foil impurities (except Mn in Fe foil)	N	N	N	N	N	N	N
Support stand inside collimator	N	N	N	N	N	N	N
Foil holder support bar	N	N	N	N	N	N	N
Collimator inner stainless steel	Y	Y	N	N	N	N	N
Collimator copper	Y	Y	N	N	N	N	N
Collimator lead	Y	Y	N	N	N	N	N
Collimator PPB9	Y	Y	N	N	N	Y	Y
Collimator outer stainless steel	N	N	N	N	N	N	N
Collimator wheels and housing	N	N	N	N	N	N	N
Entire collimator stand	N	N	N	N	N	Y	Y
Collimator stand support feet, hooks, slanted guide	N	N	N	N	N	N	N
Free field stand	N	N	N	N	N	N	N
Scattering box block s1	N	N	N	Y	Y	Y	Y
Scattering box block s2	N	N	N	Y	Y	Y	Y
Scattering box block s3	N	N	N	Y	Y	Y	Y
Scattering box block s4	N	N	N	Y	Y	Y	Y
Scattering box block s5	N	N	N	Y	Y	Y	Y
Scattering box block s6	N	N	N	Y	Y	Y	Y
Scattering box block s1 frame	N	N	N	N	N	N	N
Scattering box block s2 frame	N	N	N	N	N	N	N
Scattering box block s3 frame	N	N	N	N	N	N	N
Scattering box block s4 frame	N	N	N	N	N	N	N
Scattering box block s5 frame	N	N	N	N	N	N	N
Scattering box block s6 frame	N	N	N	N	N	N	N
Scattering box gaps	N	N	N	N	N	N	N
Scattering box Al mounting plates	N	N	N	Y	Y	Y	Y
Orientation of Al Mounting plates with respect to concrete blocks	N	N	N	N	N	N	N
Entire scattering box stand	N	N	N	Y	Y	Y	Y
Scattering box support feet, trusses, and slanted guide	N	N	N	N	N	N	N
All CAAS detectors	N	N	N	N	N	N	N
All HBG and DXT TLDs	N	N	N	N	N	N	N
Al_2O_3 TLD powder and body	N	N	N	N	N	N	N

In Table 2-13, each feature of the benchmark model that was evaluated in the ALARM-TRAN-AIR-SHIELD-001 gross analysis is listed, and if one or more detectors at a measurement location is sensitive to that feature, a "Y" is entered in the table. Then in the following subsections for each measurement location, the total experimental uncertainty due to all these features are presented. The sensitivity and uncertainty due to each individual feature evaluated is listed in Appendix I. Finally, sensitivity to these gross perturbations does not indicate a significant sensitivity or uncertainty contribution. For example, a 5 percent change in a material density may not make a significant change in a detector response. Removing the material entirely, as in this gross analysis, is equivalent to a 100 percent change in density. So values of "N" in Table 2-13 are the most meaningful, while values of "Y" mean more information / analysis is needed.

The results in Table 2-13 indicate that the following items may be removed from the ALARM-TRAN-AIR-SHIELD-001 benchmark model, which is assumed to be true for this benchmark as well.

- Detector diagnostics (Figure 1-51)
- Control rod
- Foil holder handle, hook, and legs (Figure 1-30)
- Foil impurities, except the Mn in the Fe foil
- Support stand inside collimator (Figure 1-19)
- Foil holder support bar (Figure 1-18)
- Stainless steel on the outside of the collimator
- Collimator wheels and housing (Figure 1-9)
- Collimator stand support feet, lift points, slanted portion of the guide rail (Figure 1-9 and Figure 1-13)
- Free field stand (Figure 1-32)
- Frames and lift points of the concrete blocks in the scattering box (Figure 1-25)
- Gaps between the concrete blocks in the scattering box (Figure 1-44 through Figure 1-47)
- Non-parallel orientation of the Al mounting plates in the scattering box (Figure 1-49)
- Scattering box support feet, trusses, and slanted guide (Figure 1-36)
- All CAAS detectors
- All HBG and DXT TLDs
- Al_2O_3 TLD powder and body

Most items from the list above were removed from the benchmark model. The control rod was not removed in case eigenvalue calculations with the control rod are ever needed. The stainless steel on the outside of the collimator boxes, the concrete block frames in the scattering box, the gaps between the blocks in the scattering box, and the Al_2O_3 TLD powder and body were all left in order to have a more complete model. Removing these does not provide any significant modeling simplification. However, the scattering box concrete block lift points were evaluated as part of the block frames, and these were removed from the benchmark model. The calculated Al_2O_3 TLD doses using the flux-to-dose conversion factors discussed in Section 4.0 were statistically the same whether the TLD powder and body were modeled or not. While these have been left in the benchmark model, no further sensitivity / uncertainty analysis will be performed regarding these materials. The fact that the results with and without TLD powder and body are statistically the same indicate that it is not necessary to model the actual TLD when using the flux-to-dose conversion factors used in Section 4.0. This fact may not be true for other flux-to-dose conversion factors.

2.5.2 Case 1 Collimator A Uncertainties – The dependency Table 2-13 indicates that additional sensitivity / uncertainty analysis is needed for the detectors in collimator A with respect to:

- SILENE room
- SILENE assembly wall
- Collimator A inner layer of stainless steel
- Collimator A copper
- Collimator A lead
- Collimator A PPB9
- Collimator A foil holder
- Collimator A foils

The fuel solution, lead reflector / shield, and the position of collimator A within the room were not considered for Table 2-13 because these obviously must be included in this sensitivity / uncertainty analysis. Table 2-14 provides the total experimental uncertainty for each collimator A detector (σ_{tot}^{d}). The details of

the uncertainty analysis results for collimator A are in Appendix I.1, which has tables listing the parameters being evaluated (including units), each parameter's uncertainty (σ_i), the absolute sensitivity of the detector response to that parameter (S_i^d), and the detector response uncertainty due to each parameter's uncertainty (σ_i^d).

Table 2-14. Case 1 collimator A detector total experimental uncertainties

Detector / reaction	Absolute experimental uncertainty (Bq/g or Gy)	Relative experimental uncertainty
$^{59}Co(n,\gamma)^{60}Co$	4.297E+00	0.0706
$^{197}Au(n,\gamma)^{198}Au$	4.687E+03	0.0681
$^{115}In(n,\gamma)^{116}In$	5.917E+05	0.0744
$^{115}In(n,n'\gamma)^{115m}In$	3.863E+02	0.0633
$^{56}Fe(n,p)^{56}Mn$ + $^{55}Mn(n,\gamma)^{56}Mn$	1.393E+02	0.0689
$^{24}Mg(n,p)^{24}Na$	1.604E+00	0.0647
$^{58}Ni(n,p)^{58}Co$	4.358E-01	0.0635
Al_2O_3	6.640E-02	0.0810

2.5.3 Case 2 Collimator B Uncertainties – The dependency Table 2-13 indicates that additional sensitivity / uncertainty analysis is needed for the detectors in collimator B with respect to:

- SILENE room
- SILENE assembly wall
- Collimator B inner layer of stainless steel
- Collimator B copper
- Collimator B lead
- Collimator B PPB9
- Collimator B foil holder
- Collimator B foils

The fuel solution, lead reflector / shield, the position of collimator B within the room, and details about the standard concrete shielding collimator B were not considered for Table 2-13 because these obviously must be included in this sensitivity / uncertainty analysis. Table 2-15 provides the total experimental uncertainty for each collimator B detector (σ_{tot}^d). The details of the uncertainty analysis results for collimator B are in Appendix I.1, which includes tables listing the parameters being evaluated (including units), each parameter's uncertainty (σ_i), the absolute sensitivity of the detector response to that parameter (S_i^d), and the detector response uncertainty due to each parameter's uncertainty (σ_i^d).

Table 2-15. Case 2 collimator B detector total experimental uncertainties

Detector / reaction	Absolute experimental uncertainty (Bq/g or Gy)	Relative experimental uncertainty
$^{59}Co(n,\gamma)^{60}Co$	2.530E+00	0.0783
$^{197}Au(n,\gamma)^{198}Au$	2.575E+03	0.0830
$^{115}In(n,\gamma)^{116}In$	3.230E+05	0.0841
$^{115}In(n,n'\gamma)^{115m}In$	1.009E+02	0.1074
$^{56}Fe(n,p)^{56}Mn$ + $^{55}Mn(n,\gamma)^{56}Mn$	7.700E+01	0.0740
$^{24}Mg(n,p)^{24}Na$	6.547E-01	0.1186
$^{58}Ni(n,p)^{58}Co$	1.420E-01	0.1117
Al_2O_3	6.528E-02	0.1187

2.5.4 Case 3 Free Field Location Uncertainties – The dependency Table 2-13 indicates that additional sensitivity / uncertainty analysis is needed for the detectors at the free field location with respect to:

- SILENE room
- SILENE assembly wall
- Free field foil holder
- Free field foils

The fuel solution, lead reflector / shield, and the position of the free field location within the room were not considered for Table 2-13 because these obviously must be included in this sensitivity / uncertainty analysis. Table 2-16 provides the total experimental uncertainty for each free field detector (σ_{tot}^{d}). The details of the uncertainty analysis results for the free field are in Appendix I.3, which has tables listing the parameters being evaluated (including units), each parameter's uncertainty (σ_i), the absolute sensitivity of the detector response to that parameter (S_i^d), and the detector response uncertainty due to each parameter's uncertainty (σ_i^d).

Table 2-16. Case 3 free field location detector total experimental uncertainties

Detector / reaction	Absolute experimental uncertainty (Bq/g or Gy)	Relative experimental uncertainty
$^{59}Co(n,\gamma)^{60}Co$	4.401E+00	0.0702
$^{197}Au(n,\gamma)^{198}Au$	4.237E+03	0.0659
$^{115}In(n,\gamma)^{116}In$	5.578E+05	0.0711
$^{115}In(n,n'\gamma)^{115m}In$	3.290E+02	0.0631
$^{56}Fe(n,p)^{56}Mn$ + $^{55}Mn(n,\gamma)^{56}Mn$	1.341E+02	0.0644
$^{24}Mg(n,p)^{24}Na$	1.868E+00	0.0708
$^{58}Ni(n,p)^{58}Co$	4.017E-01	0.0634
Al_2O_3	4.410E-02	0.0785

2.5.5 Case 4 Scattering Box Position 1 Uncertainties – The dependency Table 2-13 indicates that additional sensitivity / uncertainty analysis is needed for the detectors at scattering box position 1 with respect to:

- SILENE room

- SILENE assembly wall
- The Scattering box magnetite and standard concrete blocks
- Scattering box position 1 Al mounting plate
- Scattering box support stand
- Scattering box position 1 foils

The fuel solution, lead reflector / shield, and the position of the scattering box within the room were not considered for Table 2-13 because these obviously must be included in this sensitivity / uncertainty analysis. Table 2-17 provides the total experimental uncertainty for each scattering box position 1 detector (σ_{tot}^{d}). The details of the uncertainty analysis results for the scattering box position 1 are in Appendix I.4, which has tables listing the parameters being evaluated (including units), each parameter's uncertainty (σ_i), the absolute sensitivity of the detector response to that parameter (S_i^d), and the detector response uncertainty due to each parameter's uncertainty (σ_i^d).

Table 2-17. Case 4 scattering box position 1 detector total experimental uncertainties

Detector / reaction	Absolute experimental uncertainty (Bq/g)	Relative experimental uncertainty
^{59}Co(n,γ)^{60}Co	1.800E+00	0.0738
^{197}Au(n,γ)^{198}Au	1.711E+03	0.0709
^{115}In(n,γ)^{116}In	2.271E+05	0.0780
^{115}In(n,n'γ)^{115m}In	3.393E+01	0.1050
^{56}Fe(n,p)^{56}Mn + ^{55}Mn(n,γ)^{56}Mn	5.919E+01	0.0672
^{24}Mg(n,p)^{24}Na	1.629E-01	0.1351
^{58}Ni(n,p)^{58}Co	4.246E-02	0.1315

2.5.6 Case 5 scattering Box Position 2 Uncertainties – The dependency Table 2-13 indicates that additional sensitivity / uncertainty analysis is needed for the detectors at scattering box position 2 with respect to:

- SILENE room
- SILENE assembly wall
- The scattering box magnetite and standard concrete blocks
- Scattering box position 2 Al mounting plate
- Scattering box support stand
- Scattering box position 2 foils

The fuel solution, lead reflector / shield, and the position of the scattering box within the room were not considered for Table 2-13 because these obviously must be included in this sensitivity / uncertainty analysis. Table 2-18 provides the total experimental uncertainty for each scattering box position 2 detector (σ_{tot}^{d}). The details of the uncertainty analysis results for the scattering box position 2 are in Appendix I.5, which has tables listing the parameters being evaluated (including units), each parameter's uncertainty (σ_i), the absolute sensitivity of the detector response to that parameter (S_i^d), and the detector response uncertainty due to each parameter's uncertainty (σ_i^d).

Table 2-18. Case 5 scattering box position 2 detector total experimental uncertainties

Detector / reaction	Absolute experimental uncertainty (Bq/g)	Relative experimental uncertainty
$^{59}Co(n,\gamma)^{60}Co$	2.055E+00	0.0731
$^{197}Au(n,\gamma)^{198}Au$	1.804E+03	0.0698
$^{58}Ni(n,p)^{58}Co$	2.137E-02	0.1126

2.5.7 Case 6 scattering Box Position 3 Uncertainties – The dependency Table 2-13 indicates that additional sensitivity / uncertainty analysis is needed for the detectors at scattering box position 3 with respect to:

- SILENE room
- SILENE assembly wall
- The scattering box magnetite and standard concrete blocks
- Scattering box position 3 Al mounting plate
- Scattering box support stand
- Scattering box position 3 foils

The fuel solution, lead reflector / shield, and the position of the scattering box location within the room were not considered for Table 2-13 because these obviously must be included in this sensitivity / uncertainty analysis. Table 2-19 provides the total experimental uncertainty for each scattering box position 3 detector (σ_{tot}^{d}). The details of the uncertainty analysis results for the scattering box position 3 are in Appendix I.6, which has tables listing the parameters being evaluated (including units), each parameter's uncertainty (σ_i), the absolute sensitivity of the detector response to that parameter (S_i^d), and the detector response uncertainty due to each parameter's uncertainty (σ_i^d).

Table 2-19. Case 6 scattering box position 3 detector total experimental uncertainties

Detector / reaction	Absolute experimental uncertainty (Bq/g or Gy)	Relative experimental uncertainty
$^{59}Co(n,\gamma)^{60}Co$	3.285E+00	0.0719
$^{197}Au(n,\gamma)^{198}Au$	2.999E+03	0.0686
$^{58}Ni(n,p)^{58}Co$	1.252E-01	0.0716
Al_2O_3	3.296E-02	0.0785

2.5.8 Case 7 Scattering Box Position 4 Uncertainties – The dependency Table 2-13 indicates that additional sensitivity / uncertainty analysis is needed for the detectors at scattering box position 4 with respect to:

- SILENE room
- SILENE assembly wall
- The scattering box magnetite and standard concrete blocks
- Scattering box position 4 Al mounting plate
- Scattering box support stand
- Scattering box position 4 foils

The fuel solution, lead reflector / shield, and the position of the scattering box location within the room were not considered for Table 2-13 because these obviously must be included in this sensitivity / uncertainty analysis. Table 2-20 provides the total experimental uncertainty for each scattering box position 4 detector (σ_{tot}^{d}). The details of the uncertainty analysis results for the scattering box position 4 are in Appendix I.7, which has tables listing the parameters being evaluated (including units), each parameter's uncertainty (σ_i), the absolute sensitivity of the detector response to that parameter (S_i^d), and the detector response uncertainty due to each parameter's uncertainty (σ_i^d).

Table 2-20. Case 7 scattering box position 4 detector total experimental uncertainties

Detector / reaction	Absolute experimental uncertainty (Bq/g)	Relative experimental uncertainty
$^{59}Co(n,\gamma)^{60}Co$	2.997E+00	0.0727
$^{197}Au(n,\gamma)^{198}Au$	2.702E+03	0.0693
$^{58}Ni(n,p)^{58}Co$	1.323E-01	0.0723

3.0 BENCHMARK SPECIFICATIONS

3.1 Description of Model

The benchmark model closely follows the description of the experiment in Section 1.0. Therefore, only a brief summary will be given here by describing the overview image of the model shown in Figure 3-1. Following this summary is a description of a few simplifications that were made to create the benchmark model and what impact these simplifications had on the benchmark results. These simplifications are described individually, but their impact on the benchmark results are presented collectively. This is done because no simplifications that can be completely quantified were made that had a statistically significant impact on the Monte Carlo results with relative uncertainties less than 1%. Specific details about dimensions and materials of the benchmark model are given in sections 3.2 and 3.3, respectively.

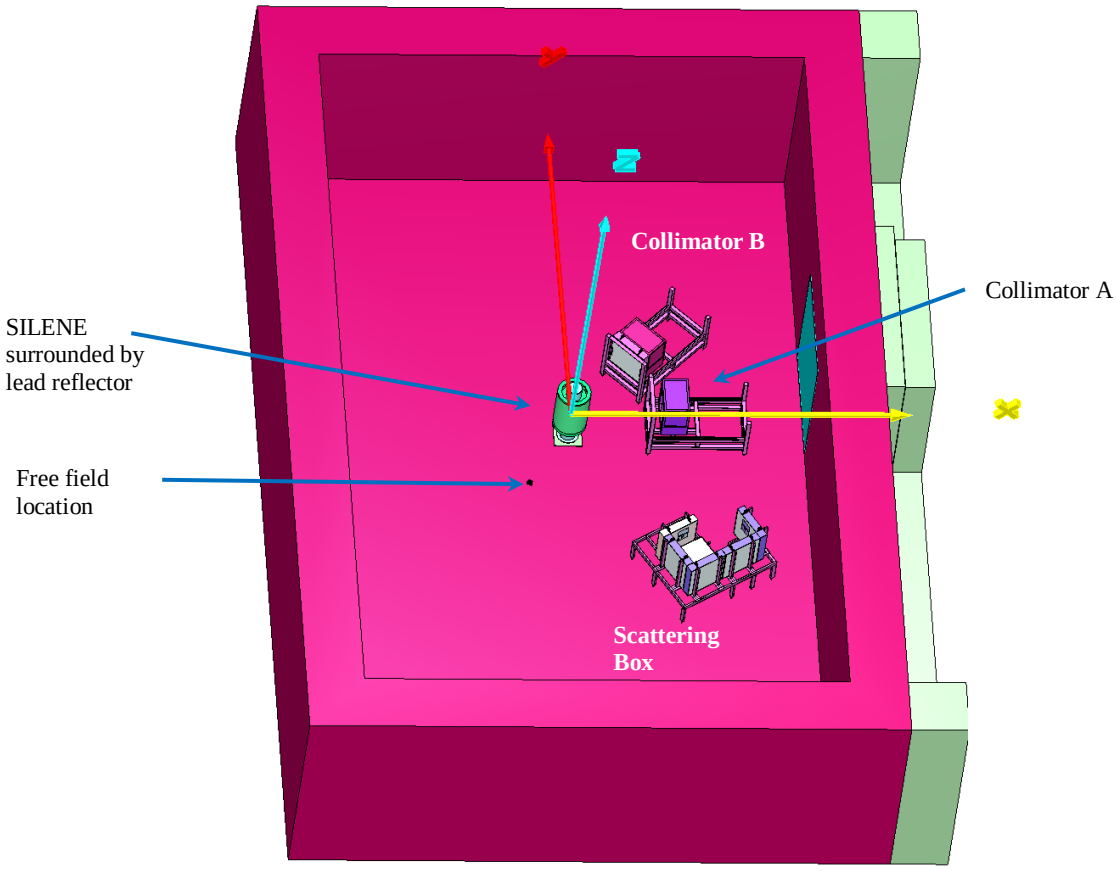

Figure 3-1. Benchmark model overview.

The top half of the SILENE room has been removed in Figure 3-1, and the air composition has been hidden so the details within the room can be seen. The SILENE critical assembly, while not at the exact center of the room it is located in, is the center of this experiment and is the tall cylinder near the center of the benchmark model in Figure 3-1. SILENE is partly obscured from view by the lead reflector. Notice the x-, y-, and z-axis in Figure 3-1 that define the coordinate system of the benchmark model. The origin of this coordinate system is at the center of SILENE, so the z-axis and cylindrical axis of SILENE are the same. The (x,y) plane (i.e., z = 0) is 1 meter above the concrete floor, which is equivalent to a solution height inside SILENE of 0 cm.

Starting at the top of the model in Figure 3-1 moving clockwise around SILENE, there are 4 measurement locations in the benchmark model: collimator B (case 2), collimator A (case 1), the scattering box, and the free field location (case 3). Collimator A, collimator B, and the free field location each contain a full set of neutron activation foils and a full set of TLDs. Within the scattering box there were 4 positions with neutron activation foils and TLDs. Position 1 (case 4) had a full set of neutron activation foils, while positions 2–4 had a partial set of foils. Positions 1 and 2 (case 5) had a full set of TLDs, while positions 3 (case 6) and 4 (case 7) only had a Valduc Al_2O_3 TLD. Figure 3-1 shows the large shielding doors and the portion of the hall outside the SILENE room that has been included in the benchmark model.

3.1.1 Simplification: SILENE Room Details – Many details about additional equipment in the SILENE room that surround the equipment directly involved in the experiments have been left out of the benchmark model. In fact, these details have not even been described in Section 1.0. Examples of these types of details are evident in many of the photographs in Section 1.0. The uncertainty analysis in Section 2.0 has shown that some of the equipment directly involved in the experiment has little effect on other parts of the experiment. A specific example is the detector diagnostics and stands have little effect on any of the measurements. Therefore, all of this additional equipment has been left out of the benchmark model, and no additional analysis has been performed to evaluate the effect of this equipment.

3.1.2 Unquantifiable Simplifications – There are a couple of simplifications in the benchmark model whose impact cannot be completely quantified. Only a little detail is discussed about these items in Section 1.0 because important information that is needed to quantify the impact on the benchmark is missing.

The first of these simplifications is not including the plastic bags and tape that support the neutron activation foils in the scattering box. These can be seen in Figure 1-72, Figure 1-74, and Figure 1-76. The experimenters expected that a single plastic bag would not have any impact on the foil activations, and this is true. However, layering multiple bags on top of each other when mounting the foils (one bag per foil) adds up and has a small but statistically significant impact. These plastic bags have been accounted for by increasing the experimental uncertainty.

No measurements were made for temperature, pressure, or humidity of the air in the SILENE room during the experiment. Therefore, the second simplification is assuming the air in the SILENE room is 20 °C, 50% humidity, and density of 1.130e-3 g/cm^3.

The third of these unquantifiable simplifications deals with the fuel, production of neutrons, and production of activation products. Clearly all the neutrons were not born at the same time, which is illustrated in Figure 1-78. Furthermore, all the neutrons did not arrive at the foils and create activation products at the same time. To simplify the benchmark model, the source is not time dependent, so all prompt and delayed fission neutrons are born at 0 sec. The activation products are assumed to be created at the same time, 0 sec, so there is no buildup of activation products in the benchmark model. Finally, bubbles form in the fuel, which sloshes around during the critical pulse. Therefore, the geometry, temperature, and density of the fuel solution changes with time, but these have been ignored to simplify the benchmark model.

The final simplification is related to the third one. Not all the dose deposited in the TLDs is from prompt fission photons and photons created from (n,γ) reactions. Photons born from fission product decay and decay of activation products within the SILENE room should also be included. Therefore, the source of photons should also be time dependent. Again, this has been excluded from the benchmark model in order to simplify it.

3.1.3 All Other Simplifications – All the remaining simplifications have been fully investigated and found to make a negligible impact on the benchmark model. In this instance, the term *negligible* means statistically insignificant when comparing Monte Carlo results with statistical uncertainties less than 1 percent. This holds true whether making a single one of these simplification or all of these simplifications simultaneously. This implies that the impact of these simplifications on the benchmark values is less than 1 percent.

- Collimator boxes A and B
    - Removal of the CIDAS and Rocky Flats CAAS detectors
    - Removal of the support stand inside the collimator
    - Removal of the ORNL TLDs
    - Removal of the bar that supports that neutron activation foil holder
- Collimator support stands
    - Removal of the support feet (blue and black portions on the floor in Figure 1-9)
    - Removal of the handles / hooks on the side and top of the stands
    - Removal of the slanted portion of the collimator box guide plate on the side of the stands
- Neutron activation foil holders
    - Removal of the handle on the front
    - Removal of the hook on the back of the holder
    - Removal of the support legs on the back
- Entire support stand at the free field location removed
- Hooks / lift points on all concrete blocks removed
- Scattering box
    - Removal of the CIDAS and Rocky Flats CAAS detectors
    - Removal of the ORNL TLDs
    - Bottom aluminum support plate not slanted
    - Average value of the gaps between concrete blocks has been used (specific details provided in section 3.2.6)
- Scattering box support stand
    - Removal of the support feet (black portions on the floor in Figure 1-36)
    - Removal of the trusses under the scattering box
    - Removal the slanted plate next to block S2
- Removal of the diagnostics and support tables in Figure 1-51

Section 2.0 specifies that the computational results for the TLD were statistically the same with or without the TLD body and powder. Therefore, inclusion of the TLD in the benchmark model is optional. Rather, a volume of air about the same size as the TLD could be used in place of the actual TLD. All of the example results provided in this report have included the TLD body and powder as described later in Section 3.0.

3.2 Dimensions

The dimensions used to construct the benchmark model are presented below, along with the location of each piece of equipment within the model.

3.2.1 SILENE Room – The walls, floor, and ceiling of the SILENE reactor cell are constructed of concrete (SILENE concrete). Figure 3-2 through Figure 3-4 show the dimensions of the SILENE room used while constructing the benchmark model (concrete is pink and air is blue).

ALARM-TRAN-PB-SHIELD-001

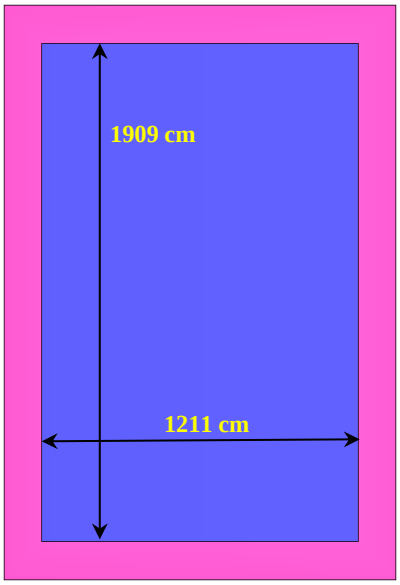

Wall thickness: 145 cm

Figure 3-2. XY view of the SILENE room.

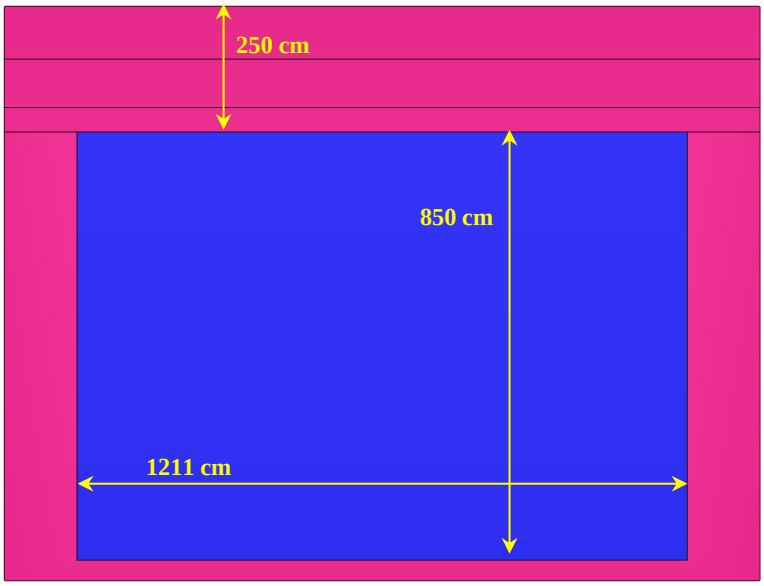

Wall thickness: 145 cm

Floor thickness: 40 cm

Figure 3-3. XZ view of the SILENE room.

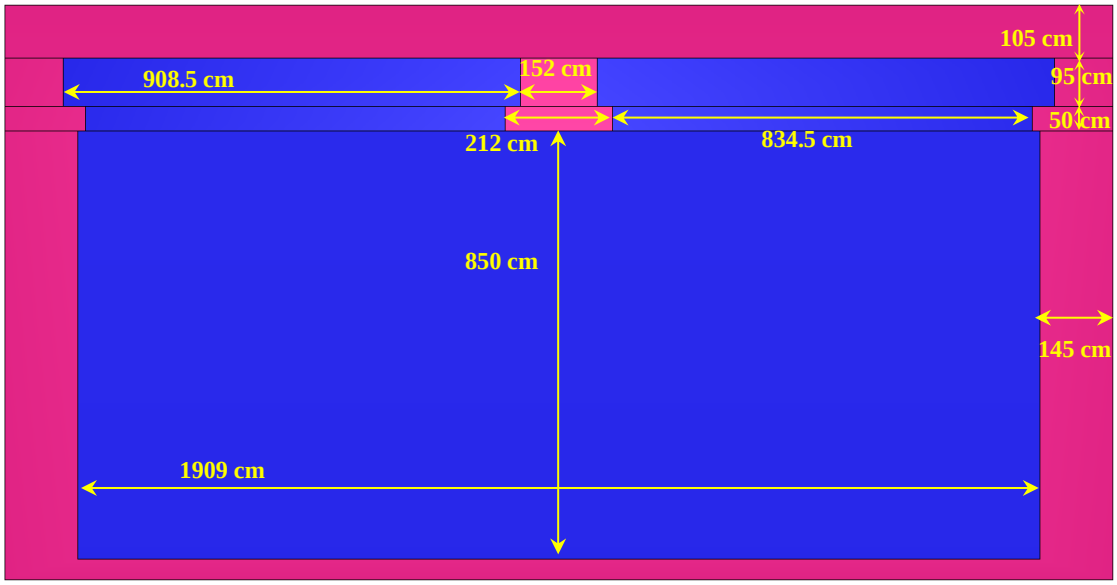

Figure 3-4. YZ view of the SILENE room.

Figure 3-5 and Figure 3-6 show dimensions of the doors to the SILENE room and the portion of the hall outside the SILENE room included in the benchmark model (all SILENE concrete). The benchmark model of the hollow steel entrance doors into the SILENE room have outside dimensions of 300 × 349 × 5.5 cm. The thickness of the steel is 2 mm on all sides, so the internal dimensions of the steel doors are 299.6 × 348.6 × 5.1 cm. The concrete threshold below the steel doors is 1 cm tall and 5.5 cm wide (same width as the steel doors). These thresholds are 300 cm long, so they are the same length as the opening in the concrete wall.

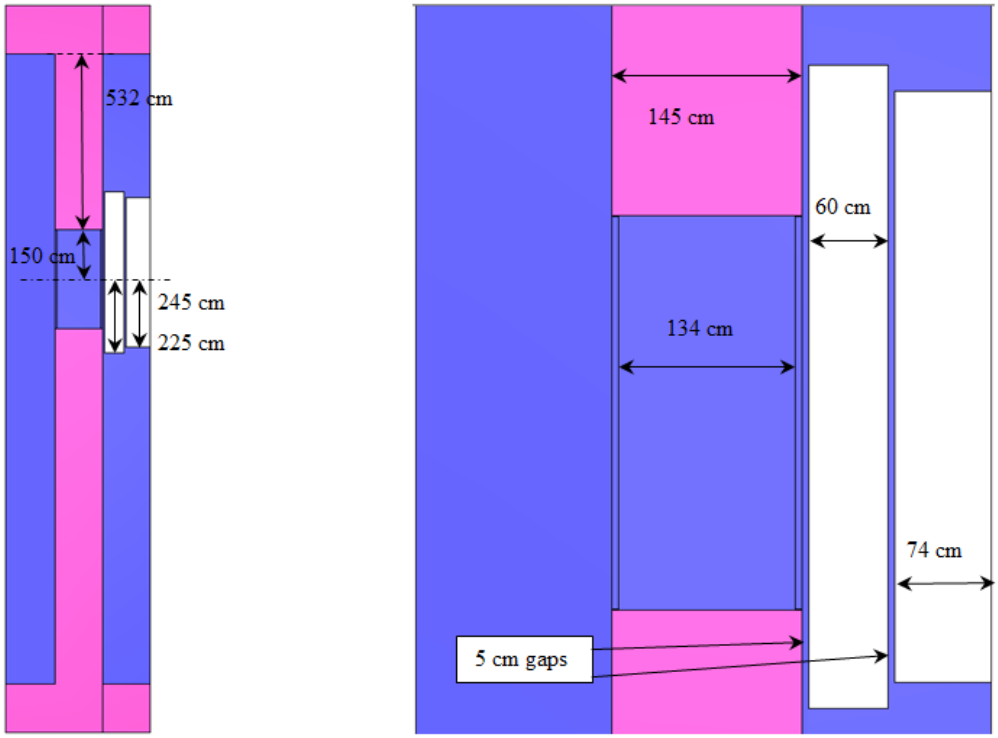

Figure 3-5. XY view of the SILENE room doors and hall.

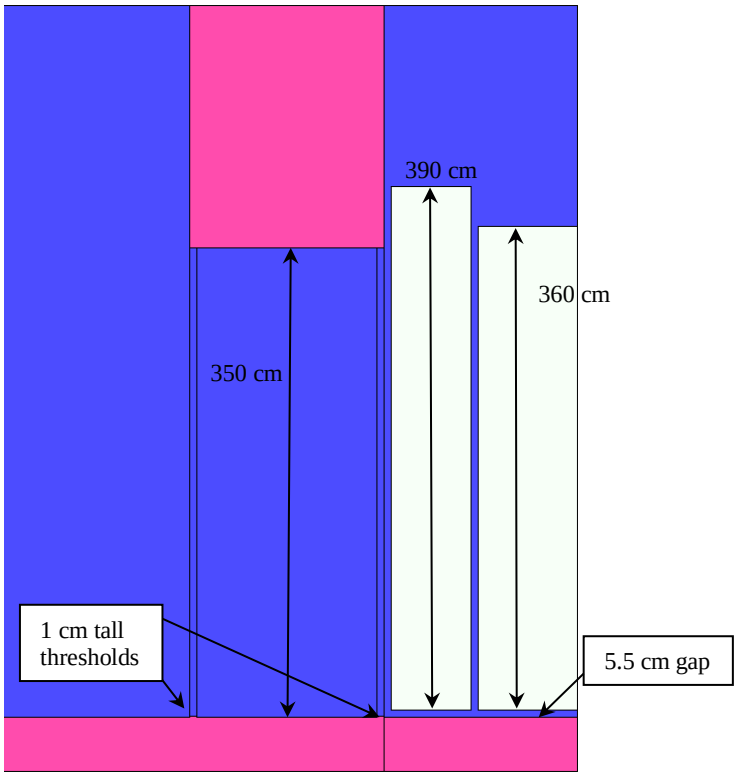

Figure 3-6. XZ View of the SILENE room doors and hall.

Finally, the location of SILENE (z-axis) is shown in Figure 3-7.

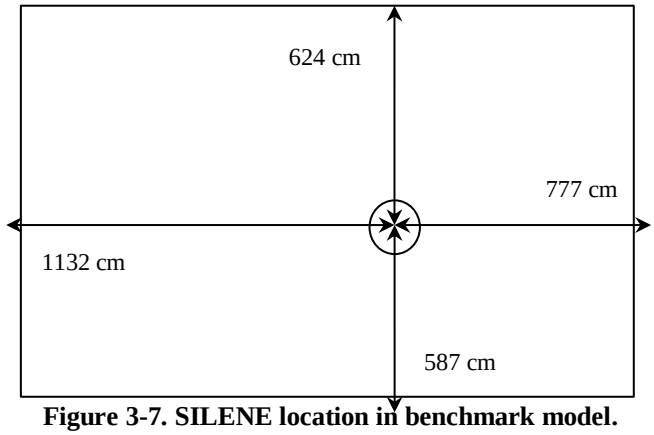

Figure 3-7. SILENE location in benchmark model.

3.2.2 Collimator Boxes – Each collimator box is open on one side, which is the side facing SILENE. In this experiment, collimator A was unshielded, so the detectors inside had direct line of sight to SILENE. Collimator B was shielded by 20 cm of standard concrete. Each collimator consists of several layers of material. The structure of these layers, starting on the interior surface and moving toward the exterior surface, is 0.2 cm of stainless steel, 0.5 cm of copper, 1 cm of lead, 15 cm of PPB9, and 0.2 cm of stainless steel. The layers of the collimator outside the PPB9 vary close to the corners and edges of the collimator because there is a 0.5 cm thick stainless steel frame. The outermost 0.2 cm thick layer of stainless steel is attached to this frame, but it does not cover the entire frame. It is assumed that the PPB9 was poured into the collimator box once most of the outer layer of stainless steel had been attached to the frame. Figure 3-8 shows the entire collimator model and dimensions for the internal cavity. Figure 3-9 shows the different material layers that create the collimator box. Figure 3-10 shows the stainless steel frame, and Figure 3-11 shows the outer most layer of stainless steel that attaches to the frame. Notice the small gaps in Figure 3-11. These account for the fact that the outer layer of stainless steel does not cover the entire frame.

ALARM-TRAN-PB-SHIELD-001

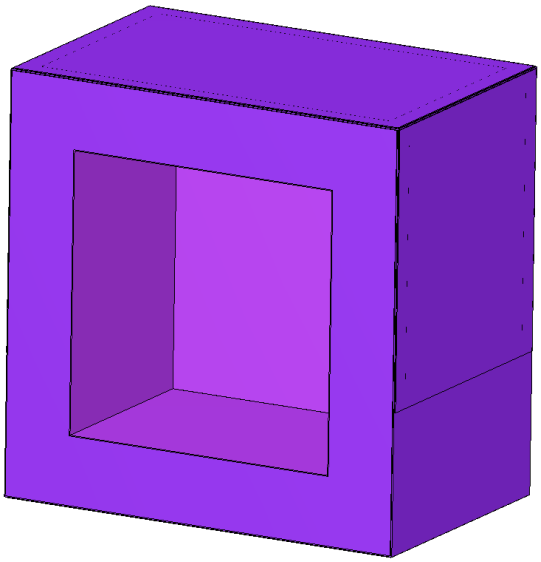

Collimator Internal Cavity
- Height: 66.2 cm
- Width: 66.2 cm
- Depth (Dimension into Page): 48.1 cm

Figure 3-8. Overall collimator model with internal cavity.

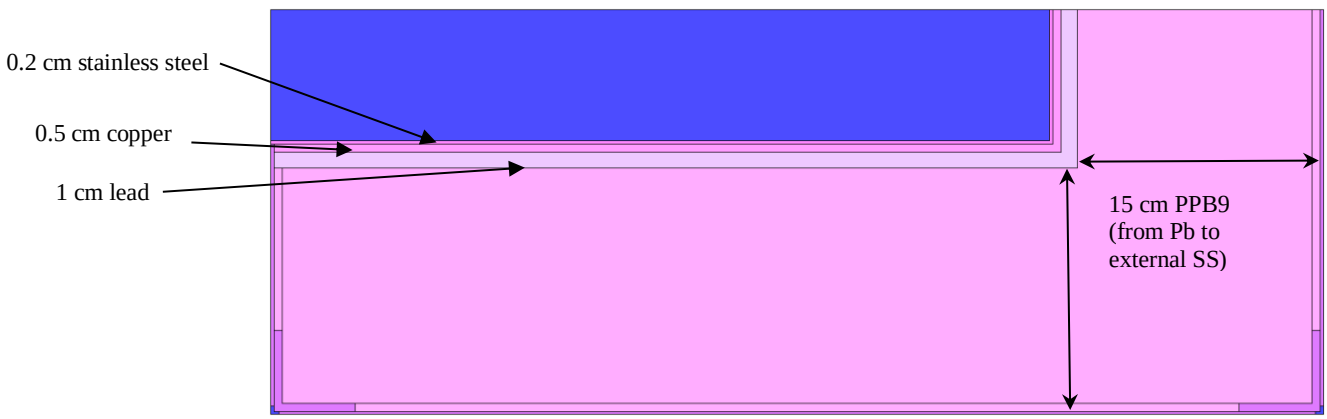

Figure 3-9. Internal material layers of collimator model (blue is air).

ALARM-TRAN-PB-SHIELD-001

Dimensions of Openings in Frame (Height × Width × Depth):
- Front/Back: 89.2 cm × 89.2 cm × 0.5 cm
- Left/Right: 57.2 cm × 0.5 cm × 54.4 cm
- Top/Bottom: 0.5 cm × 89.2 cm × 54.4 cm

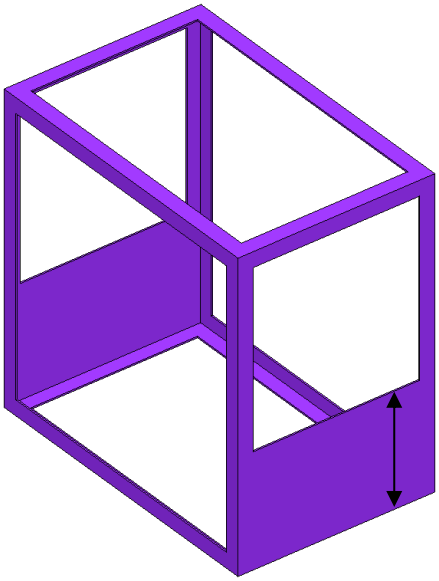

External Dimensions:
- Height: 99.2 cm
- Width: 99.2 cm
- Depth: 64.4 cm

- Thickness of Stainless Steel: 0.5cm

37 cm from the bottom of the frame to the bottom of the side opening

Figure 3-10. Collimator stainless steel frame.

External Dimensions of Outer Stainless Steel (Height × Width × Depth):
- Front/Back: 98.6 cm × 98.6 cm × 0.2 cm
- Left/Right: 65.4 cm × 0.2 cm × 63.8 cm
- Top/Bottom: 0.2 cm × 98.6 cm × 63.8 cm

Dimensions of Opening in Front (Height × Width × Depth):
- 66.2 cm × 66.2 cm × 0.2 cm

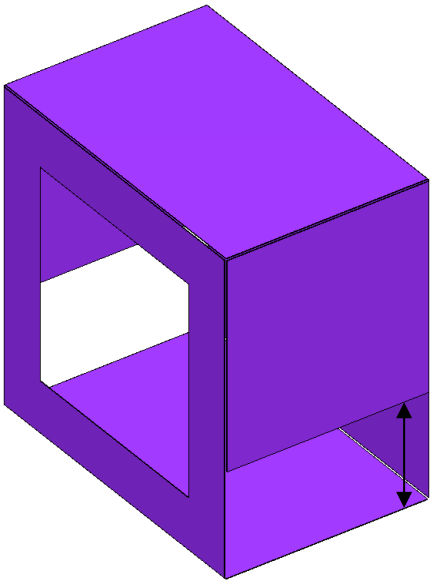

The external stainless steel does not entirely cover the frame shown in Figure 3-10. The edge of each external sheet is 0.5 cm from the edge of the frame, except for the bottom edge of the left and right pieces. The center of each piece lines up with the center of the face of the frame it is covering, again, except on the left and right.

- Thickness of stainless steel: 0.2 cm

33.5 cm from the Top of the Bottom Piece to the Bottom of the Side Piece

Figure 3-11. External stainless steel layer attached to the stainless steel frame.

The collimator boxes each sit atop a support stand. The support stands also support any shielding material placed between the collimator and SILENE, which was the case of collimator B. Figure 3-12 through Figure 3-14 show dimensions of the collimator support stand. The collimator support stands are made of carbon steel that is *0.5 cm thick*. Finally, the location of both collimator stands, both collimators, and the collimator B shielding within the SILENE room are given in Figure 3-15. Note that collimator A is not perfectly centered with respect to SILENE. Rather, collimator A is slightly offset (0.5 cm) towards the scattering box.

ALARM-TRAN-PB-SHIELD-001

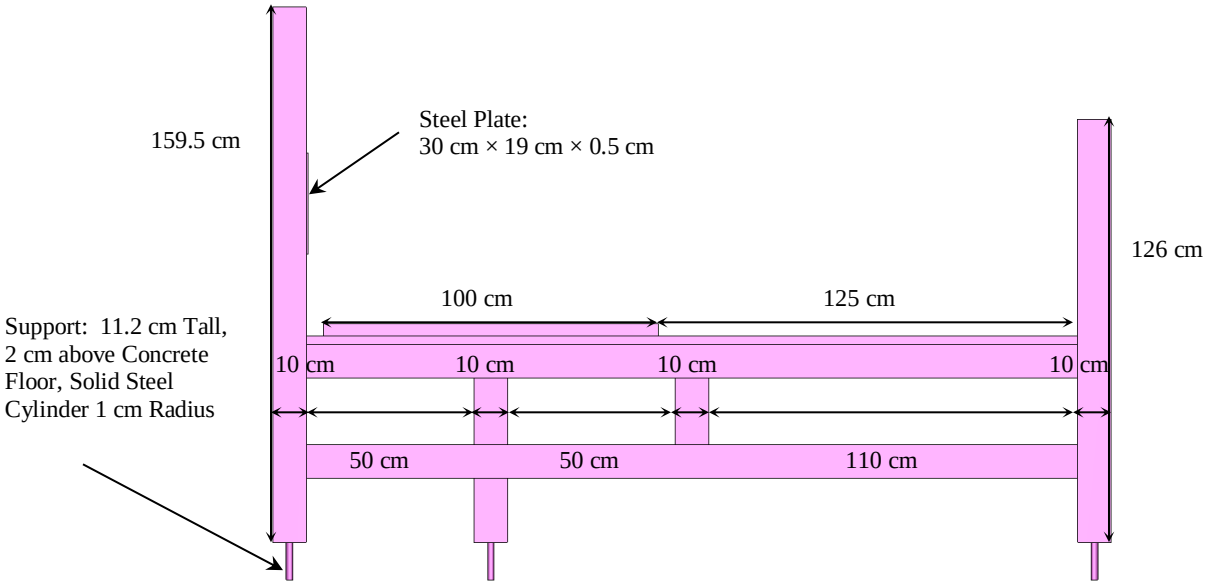

Figure 3-12. XZ view of the collimator stand.

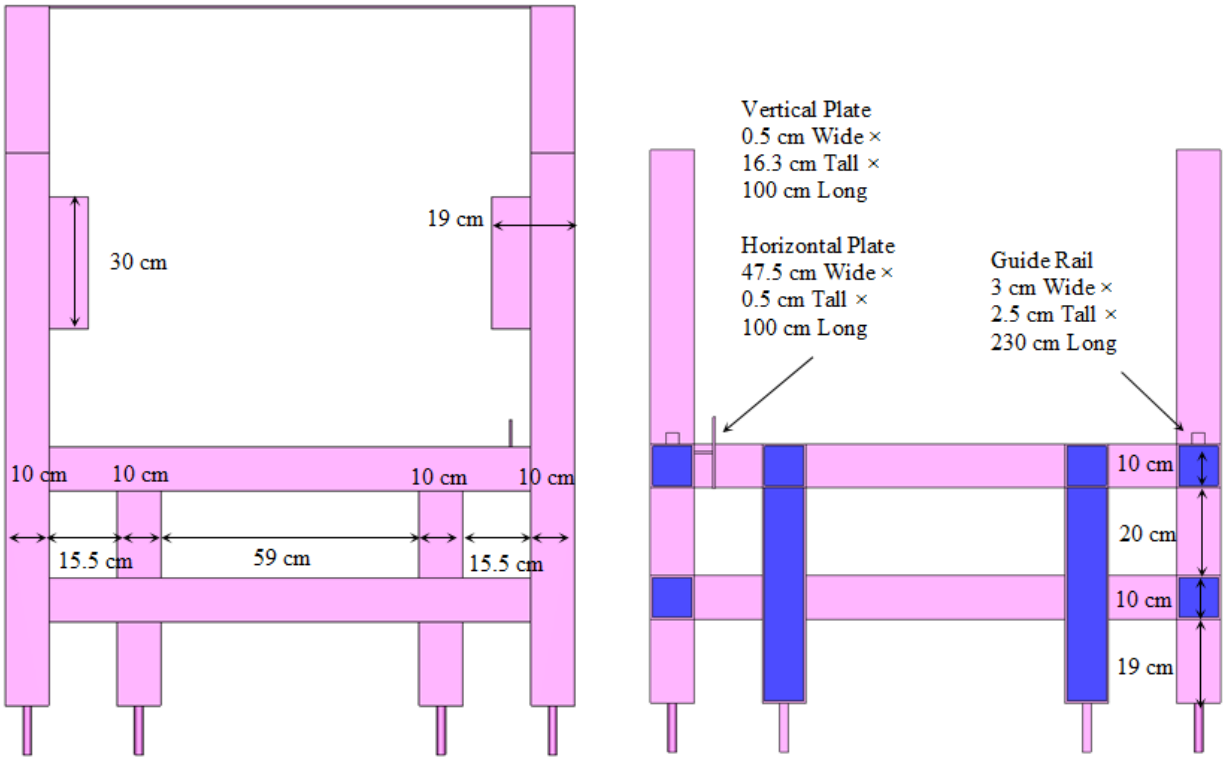

Figure 3-13. YZ View of the collimator stand (left looking towards SILENE [-x]; right looking towards reactor cell doors with part nearest SILENE removed [+x]).

Figure 3-14. XY View of the collimator stand.

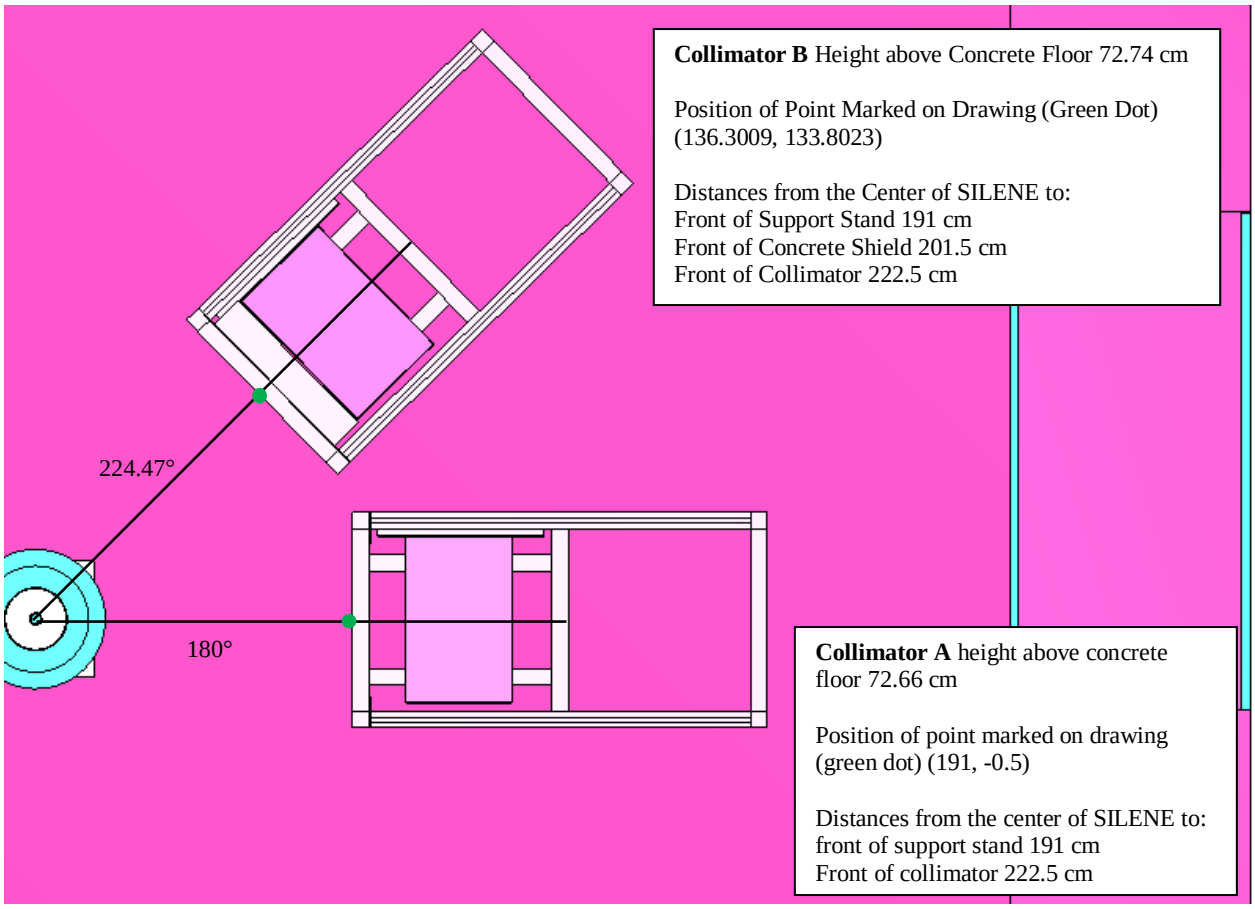

Figure 3-15. Location of the collimator stands, collimators, and collimator B shielding.

The angle of rotation and translation for collimator B in Figure 3-15 was determined using the measurements in Figure 1-21. Several of these measurements provide different distances from collimator B and its stand to the walls of the SILENE room. With these distances, dimensions of the collimator B and its stand, and trigonometry this rotation and translation can be reproduced.

3.2.3 Collimator B Shielding – The shielding in front of collimator B was a 20 cm thick block of standard concrete. The benchmark model of this shielding block is shown in Figure 3-16. This same geometric model is used for the concrete blocks used to construct the scattering box.

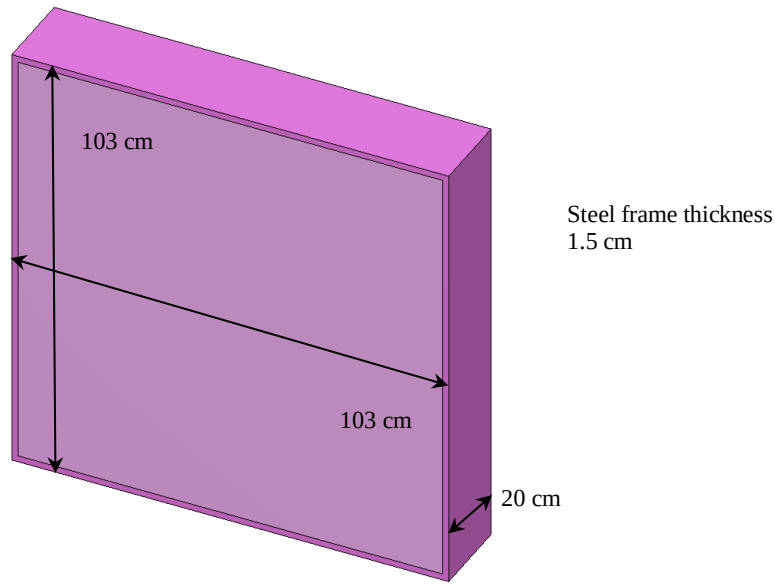

Figure 3-16. Concrete shield block model.

3.2.4 Simplified Foil Holder Model – The foil holder has been simplified to reduce the complexity of the benchmark model. The details that were removed have a statistically insignificant effect on the benchmark model results. Figure 3-17 through Figure 3-19 show the dimensions of the simplified foil holder model.

ALARM-TRAN-PB-SHIELD-001

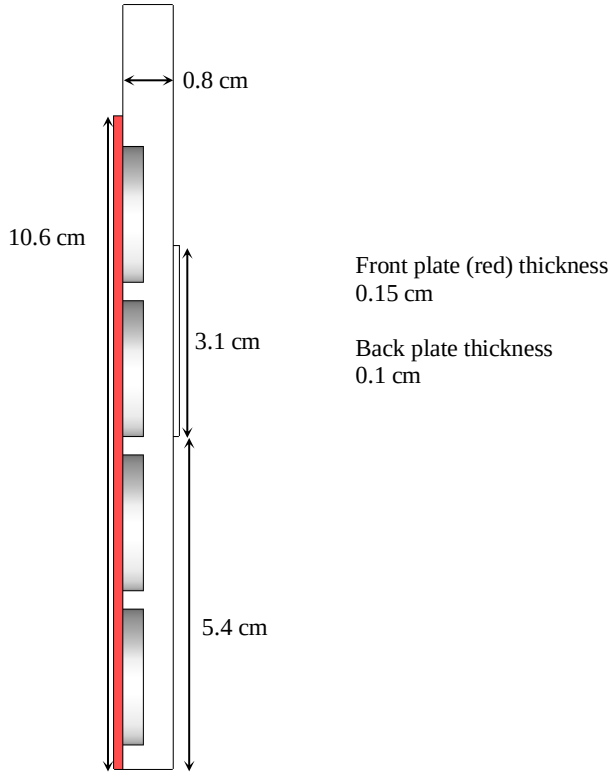

Figure 3-17. XZ view of the foil holder model.

There is 2.25 cm between the side of the holder and the center of the nearest holes, and 1.5 cm between the bottom of the holder and the center of the nearest holes.

The hole diameter is 2.2 cm, and the holes are 0.32 cm deep.

The pitch vertically and horizontally between holes is 2.5 cm.

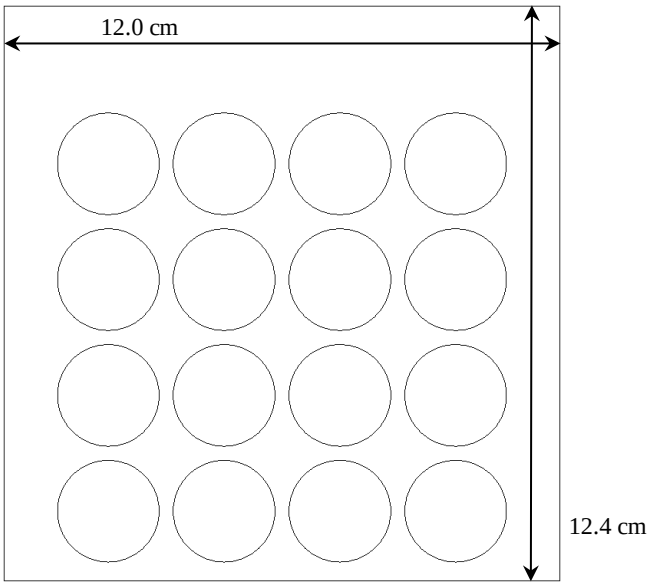

Figure 3-18. YZ view of the foil holder model.

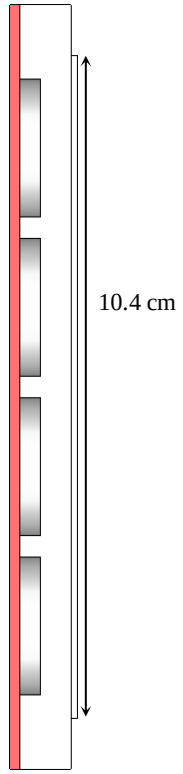

Figure 3-19. XY view of the foil holder model.

3.2.5 Free Field Location – Nearly the entire geometry of the free field location has been simplified. All that remains after these simplifications are the neutron activation foils, the foil holder, and the TLD. The foil holder model has been described in section 3.2.4, the foils in section 3.2.10, and the TLD in section 3.2.11. The location of everything associated with the free field location is also described in section 3.2.10 specifically in Figure 3-34 and Figure 3-35. The axis of the cylindrical support of the free field stand (Figure 1-34), if included in the benchmark model, would be on the 60° line (see Figure 1-2, Figure 1-53, Figure 3-15, and Figure 3-24), 270 cm from the axis of SILENE, at this (X, Y) position in the global coordinate system (-135.2, -234.17). In hindsight, it may be easier to build the entire free field stand, perform the needed rotation and translation, and then remove the unnecessary parts. The reason this seems true is because its location within the SILENE room is based on the central cylindrical support.

3.2.6 Scattering Box – The scattering box is constructed using 6 of the concrete shielding blocks described in Section 3.2.3. However, section 3.2.3 is specifically describing the standard concrete shield block in front of collimator B, whereas the scattering box is built using 2 magnetite concrete shield blocks in addition to 4 standard concrete shield blocks. The dimensions of all these shielding blocks are identical in the benchmark model, so the only difference is the material composition. Figure 3-20 below shows the scattering box benchmark model. The shield labels in Figure 3-20 are consistent with those used in Figure 1-45. Shield S1 and S2 are the magnetite concrete blocks, and shields S3 – S6 are the standard concrete blocks. Table 3-1 lists the gaps between all the shield blocks in the benchmark model. The gap sizes in Table 3-1 are averages of the gap measurements in Figure 1-45 through Figure 1-47.

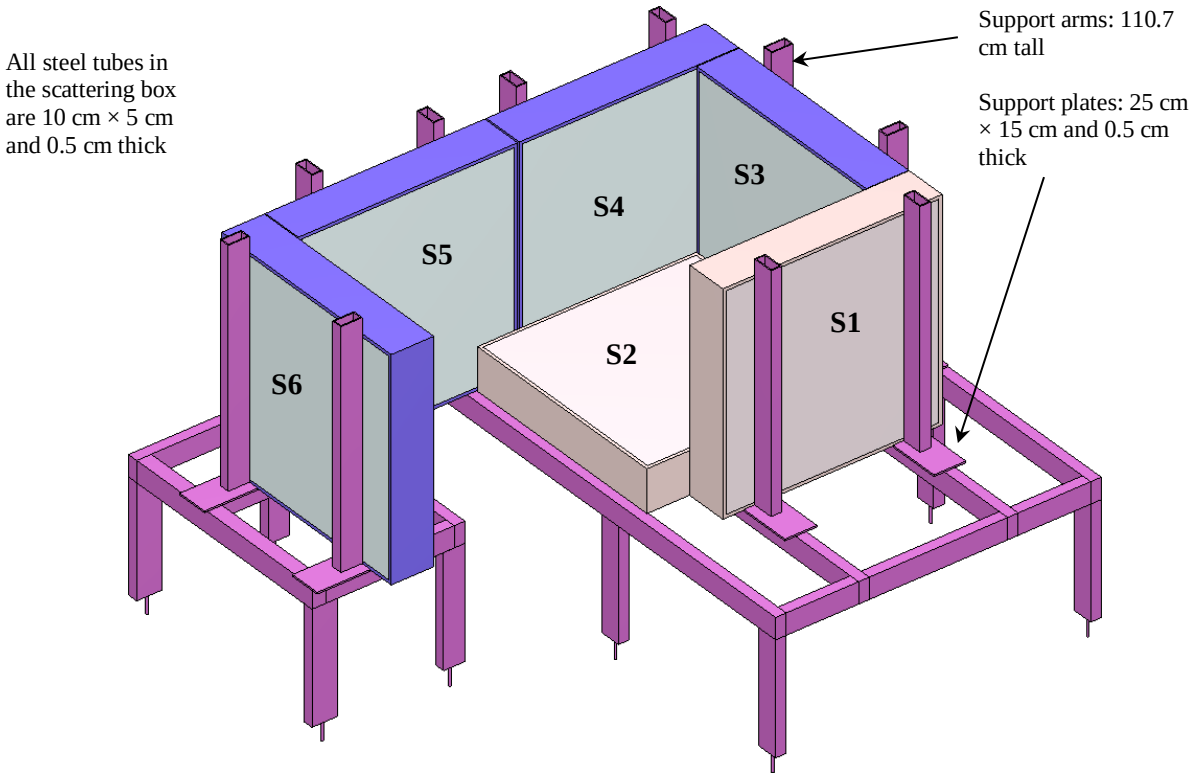

Figure 3-20. Scattering box benchmark model overview.

Table 3-1. Scattering box benchmark model gaps

Shield block combination	Gap size (cm)
S1 – S2	0.25
S1 – S3	0.25
S2 – S3	0.0
S2 – S4	0.475
S2 – S5	0.475
S3 – S4	0.475
S4 – S5	0.8
S5 – S6	0.5

The scattering box sits atop a steel support stand. The dimensions of the scattering box support stand in the benchmark model are shown in Figure 3-21 through Figure 3-23. Finally, the location of the scattering box on the steel support stand and the location of the steel support stand within the SILENE room are shown in Figure 3-24.

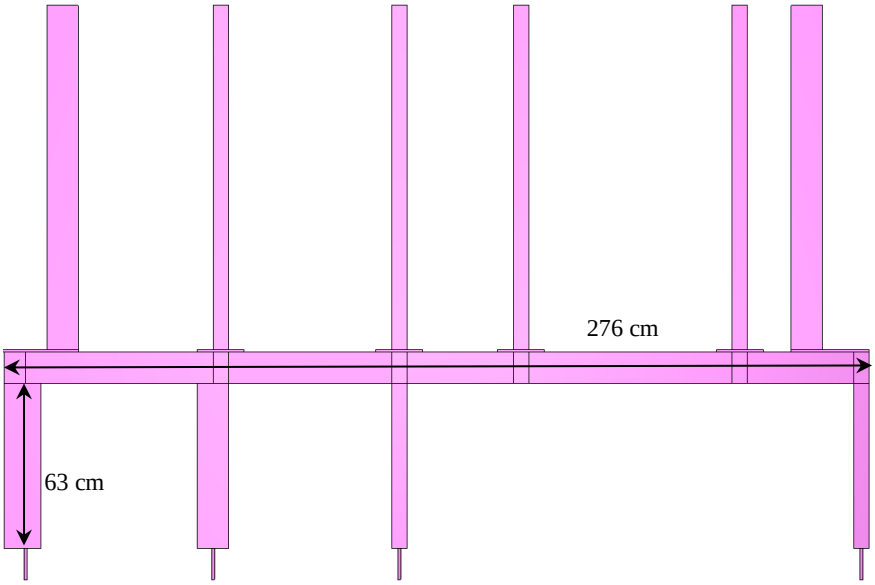

Figure 3-21. XZ view of the scattering box support stand.

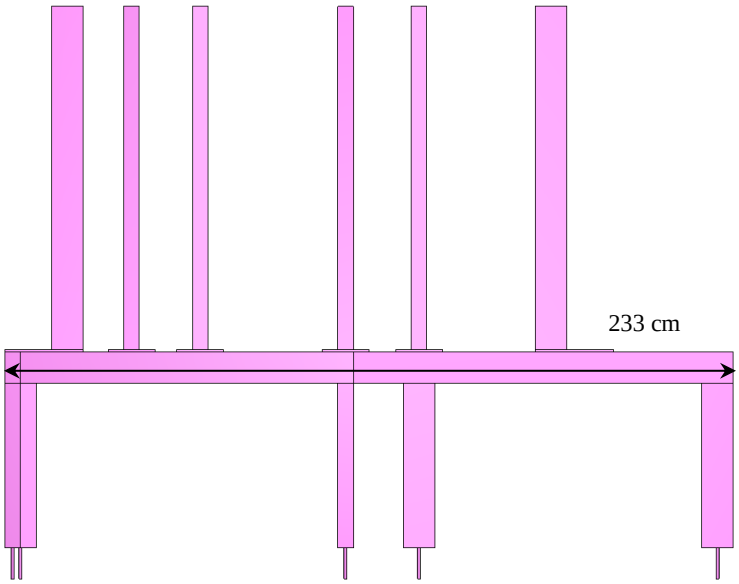

Figure 3-22. YZ view of the scattering box support stand.

ALARM-TRAN-PB-SHIELD-001

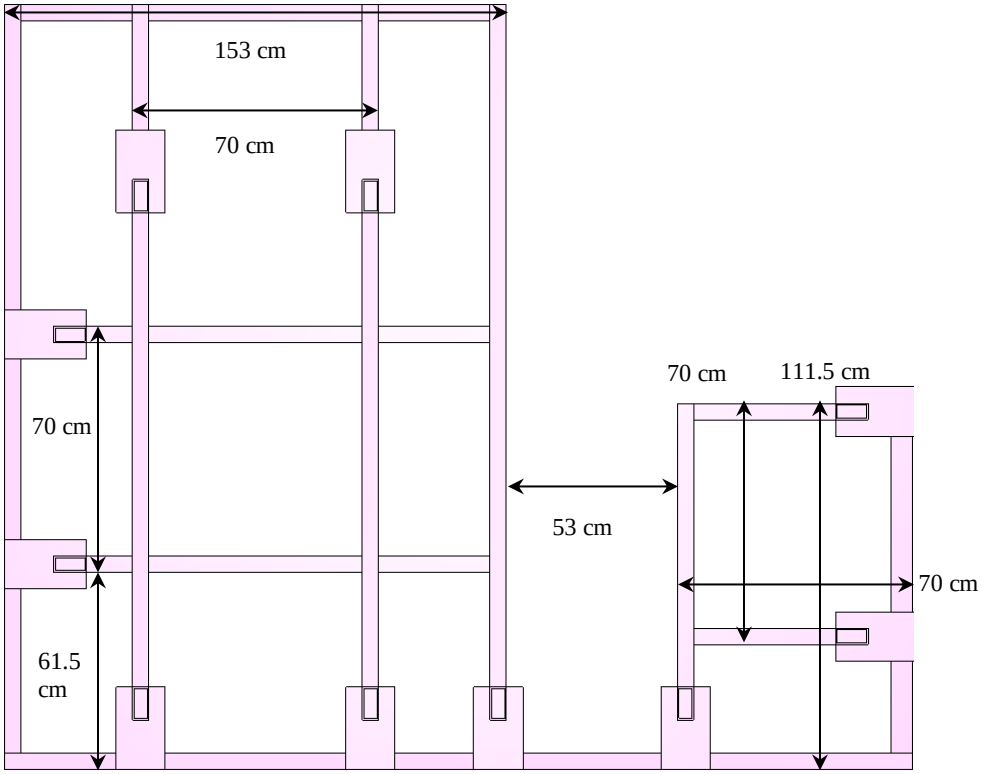

Figure 3-23. XY view of the scattering box support stand.

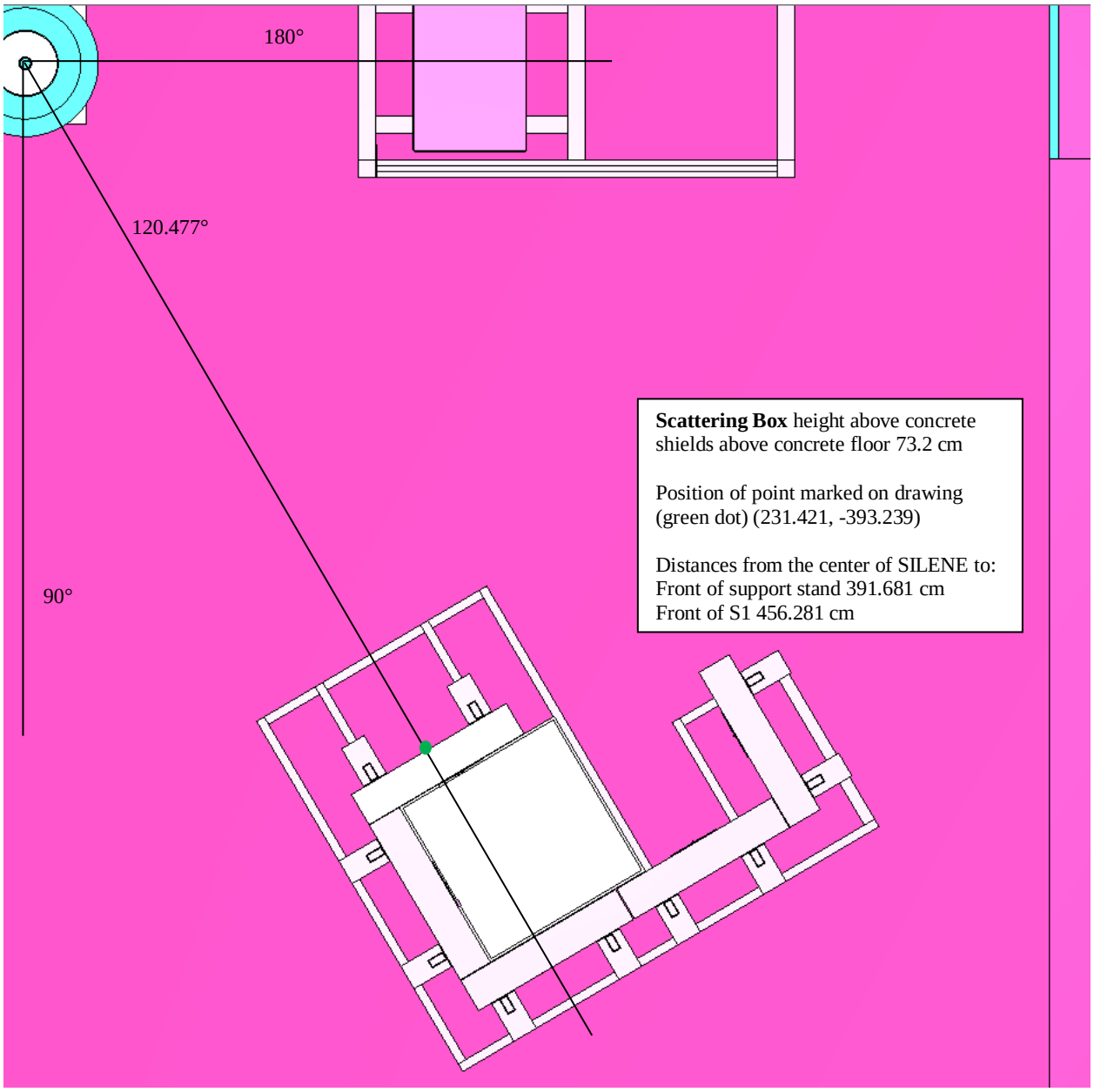

Figure 3-24. Location of the scattering box on the support stand and the support stand within the SILENE room.

The angle of rotation and translation for the scattering box in Figure 3-24 was determined using the measurements in Figure 1-42. Several of these measurements provide different distances from the scattering box and its stand to the walls of the SILENE room. With these distances, dimensions of the scattering box and its stand, and trigonometry one can reproduce this rotation and translation.

3.2.7 Scattering Box Detector Mounting Plate – The neutron activation foils and TLDs in the scattering box were mounted using two aluminum plates at each position. In the benchmark model these aluminum plates are identical. The thickness of these plates is 0.1 cm, and the other dimensions can be seen in Figure 3-25. Figure 3-26 shows how these plates are put together to form the mount for each scattering box position. Note that the angle shown in Figure 1-49 has been ignored to simplify the model.

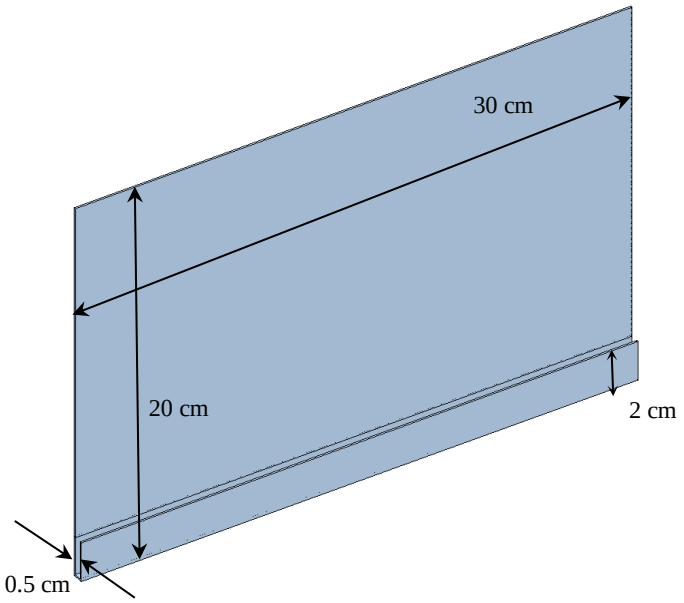

Figure 3-25. Dimensions of the scattering box mounting plates.

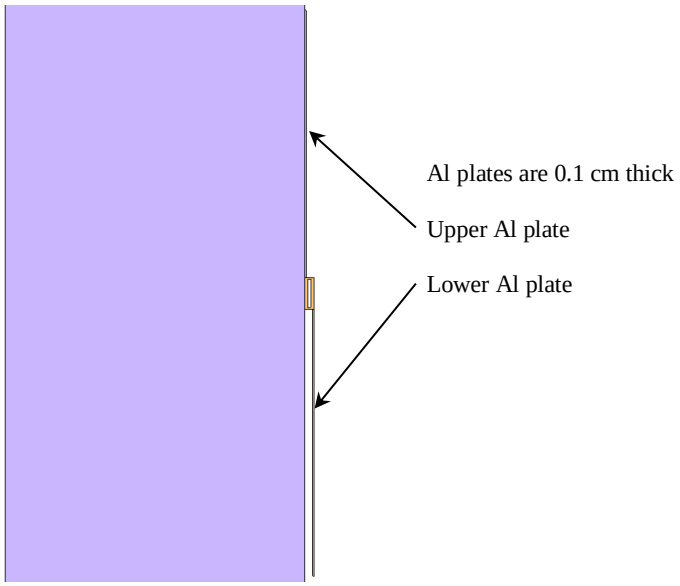

Figure 3-26. Configuration of the scattering box mount.

3.2.8 SILENE Critical Assembly – The dimensions of the benchmark model of SILENE are shown in Figure 3-27. The lead reflector / shield is also included in Figure 3-27 for perspective, but it is described separately. The SILENE benchmark model matches the description in Section 1.4.1 exactly, but that description itself is a simplification.

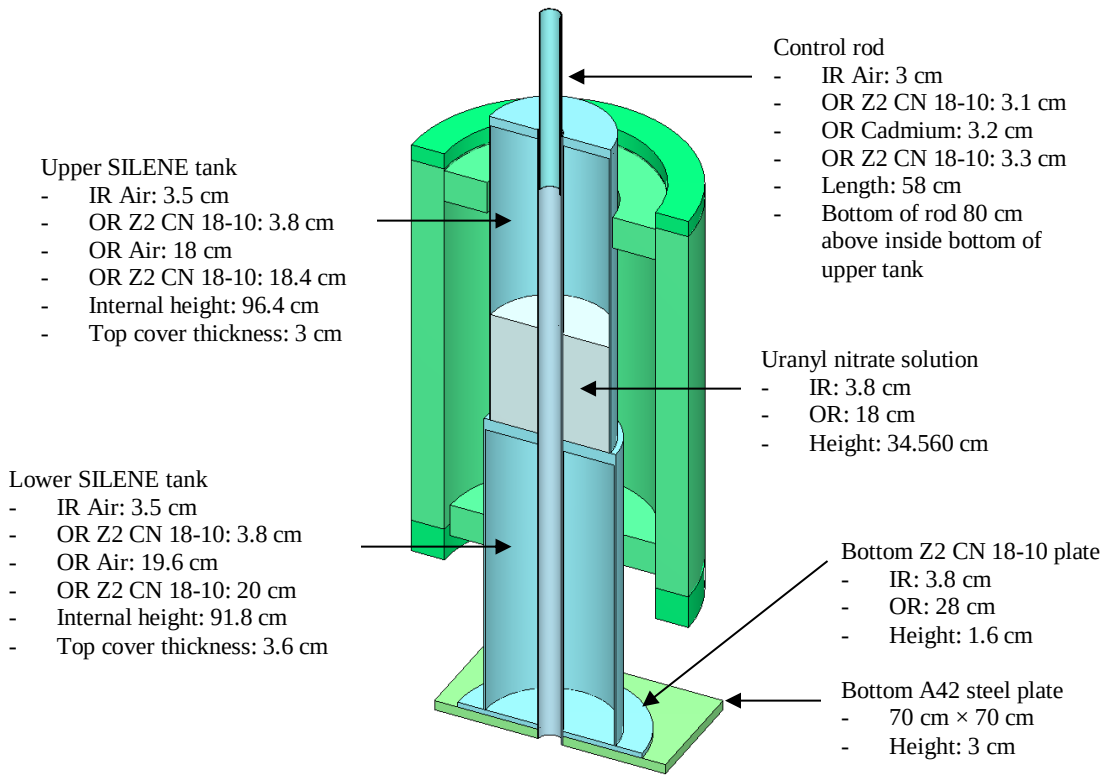

Figure 3-27. SILENE assembly benchmark model dimensions.

Figure 3-27.

3.2.9 Lead Reflector – Nearly all of the SILENE illustrated in Figure 3-27 was removed to create Figure 3-28, which primarily leaves the lead reflector / shield. The dimensions of the lead reflector / shield are given in Figure 3-28. As can be seen in Figure 3-28, the lower lead ring does not completely surround the SILENE. Details about the lower lead ring's geometry are provided in Figure 1-56 in Section 1.4.1. In summary, the lower lead ring is divided into 3 pieces that are evenly distributed around SILENE. The inner arc length of these pieces is 21 cm, and the outer arc length is 42 cm. One of the three equally sized gaps in the lower lead ring is centered on the 180-degree line which lies between SILENE and collimator A (see Figure 3-15).

ALARM-TRAN-PB-SHIELD-001

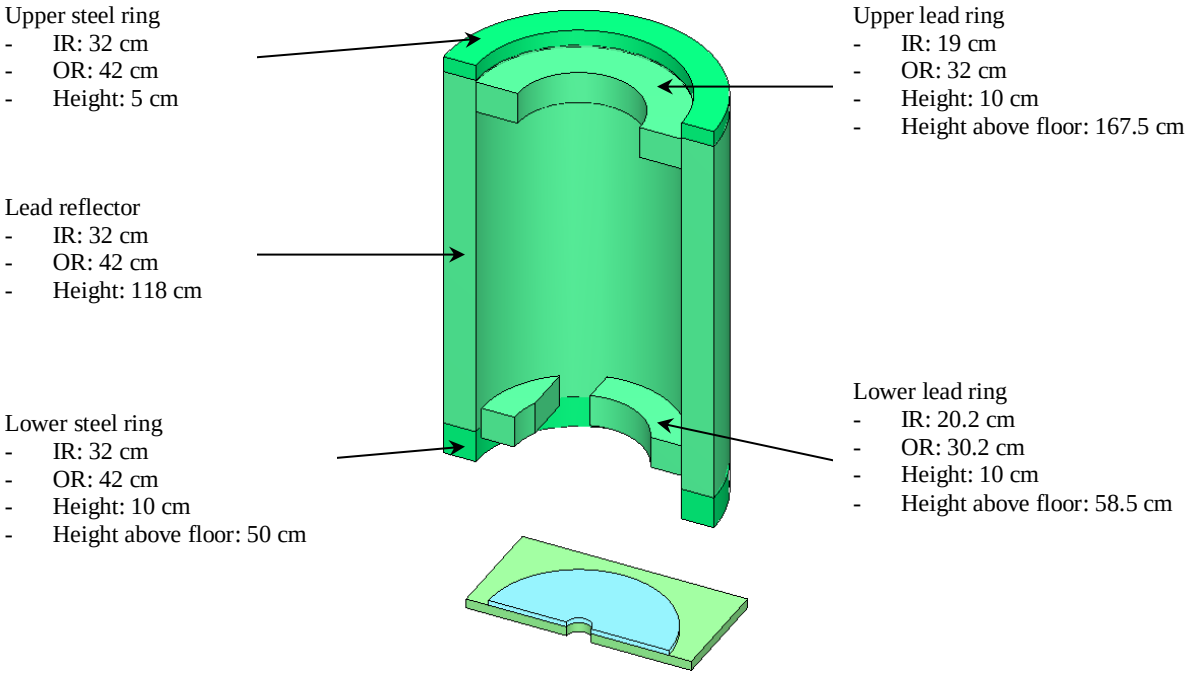

Figure 3-28. Lead reflector benchmark model dimensions.

3.2.10 Neutron Activation Foils – An example of the benchmark model of the neutron activation foils is shown in Figure 3-29. Almost all the neutron activation foils in the benchmark model have the same diameter, 2 cm, except for the Mg foil in the scattering box 1 location, which has a dimeter of 2.2 cm. Table 3-2 gives the benchmark model thickness, t, for each activation foil. As stated previously, the Ti foil was not intended to produce any data for this benchmark but is included in the model for completeness.

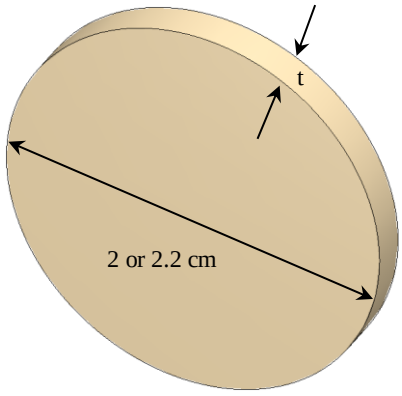

Figure 3-29. Example of a benchmark model neutron activation foil.

Table 3-2. Thickness of each benchmark model neutron activation foil

Location	Reference name	Thickness (mm)
Case 1 collimator A	Au06-A10	0.25
	Ni014	2
	In10-A10	1
	Fe025	3
	Mg002	2
	Co021	2
	Ti	2
Case 2 collimator B	Au04-A10	0.25
	Ni023	2
	In11-A10	1
	Fe033	3
	Mg035	2
	Co012	2
	Ti	2
Case 3 free field	Au02-A10	0.25
	Ni012	1
	In004	1
	Fe019	3
	Mg026	2
	Co015	2
	Ti	2
Case 4 scattering box 1	Au009	0.25
	Ni027	2
	In003	1
	Fe035	3
	Mg-SNAC	10
	Co027	2
	Ti	2
Case 5 scattering box 2	Au006	0.25
	Ni028	2
	Co024	2
Case 6 scattering box 3	Au011	0.25
	Ni022	2
	Co031	2
Case 7 scattering box 4	Au010	0.25
	Ni025	2
	Co036	2

The neutron activation foils in the collimators and at the free field location were mounted in a foil holder. The center of each benchmark model neutron activation foil that is inside one of the foil holders is placed at the exact center of the holes in the foil holder. Figure 3-30 and Figure 3-31 illustrate this positioning within the foil holder. Note that the layout of foils in Figure 3-30 is used for all neutron activation foil locations, including the scattering box. Therefore, when a subset of foils is used in the scattering box, the foils that are present are in this same configuration. This matches Figure 1-73, Figure 1-75, and Figure 1-77.

ALARM-TRAN-PB-SHIELD-001

Pitch of holes in holder: 2.5 cm

Pitch of foils in holder: 2.5 cm

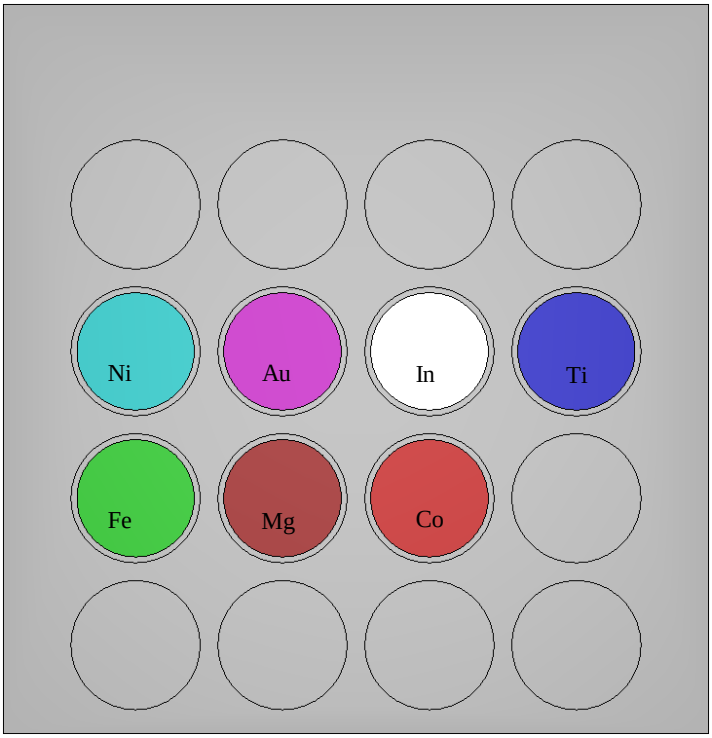

Figure 3-30. YZ view of neutron activation foils within the foil holders.

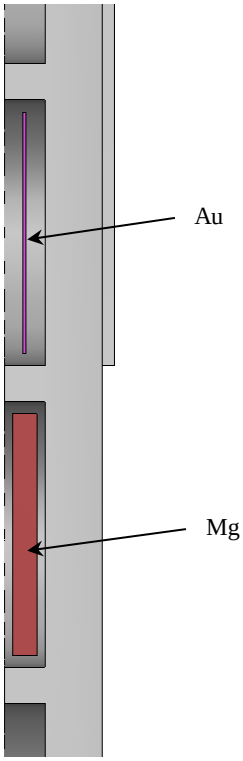

Figure 3-31. XZ view of the neutron activation foils within the foil holders.

The location of the foil holders and Al_2O_3 TLD within collimators A and B are identical as shown in Figure 3-32 and Figure 3-33. The foil holder and Al_2O_3 TLD at the free field location are shown in Figure 3-34 and Figure 3-35. For the free field location, part of the support stand has been included in Figure 3-34 and Figure 3-35 to provide a frame of reference to locate the foil holder. Recall that the free field support stand has been excluded from the benchmark model to simplify the geometry (see section 3.2.5). The axis of the cylindrical support of the free field stand (Figure 1-34), if included in the benchmark model, would be on the 60° line (see Figure 1-2, Figure 1-53, Figure 3-15, and Figure 3-24), 270.4 cm from the axis of SILENE, at this (X, Y) position in the global coordinate system (-135.2, -234.17). The distance along this 60° line from the axis of the free field stand to the front of the foil holder, the 8 mm thick portion with holes and excluding the 1.5 mm thick cover, is 3.95 cm (see Figure 1-28 through Figure 1-35). The distance from the 60° line, in the perpendicular direction, to the center of the foil holder is 15.05 cm. The position is illustrated in Figure 3-36 to show how the position in Figure 3-35 was derived. Finally, the foil configuration and location within the foil holders in Figure 3-32 through Figure 3-35 is given in Figure 3-30 and Figure 3-31.

ALARM-TRAN-PB-SHIELD-001

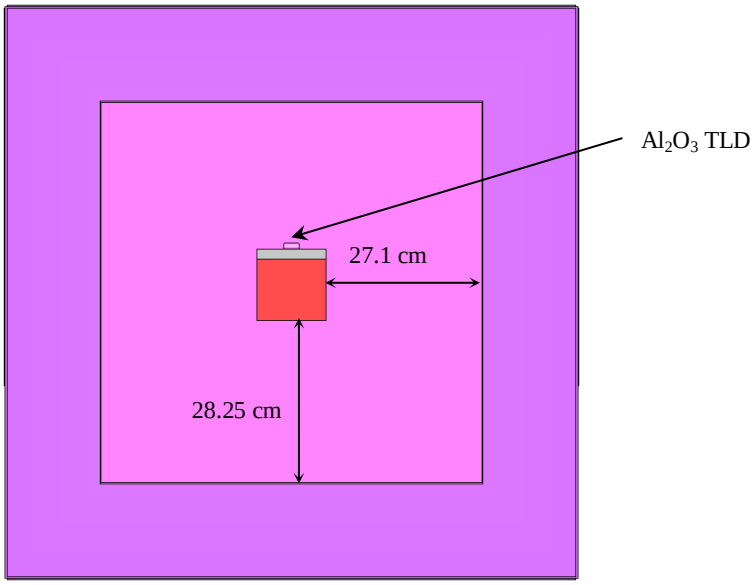

Figure 3-32. Elevation view of the foil holder within the collimators.

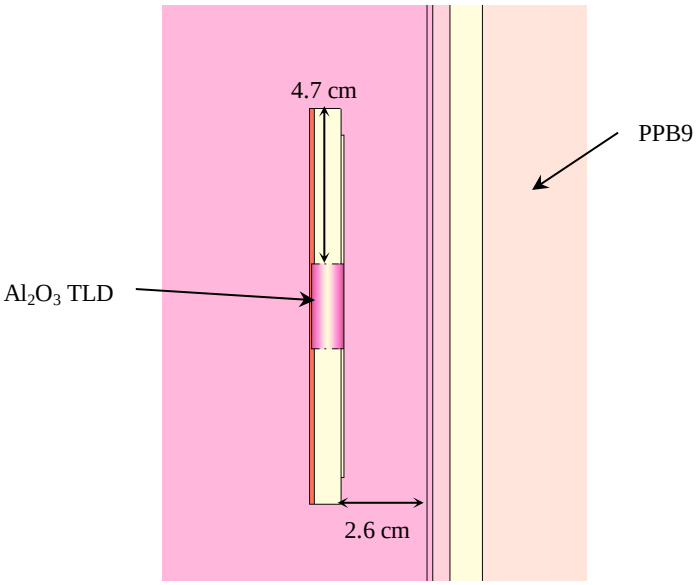

Figure 3-33. Plan view of the foil holder within the collimators.

Figure 3-34. elevation view of the foil holder at the free field location.

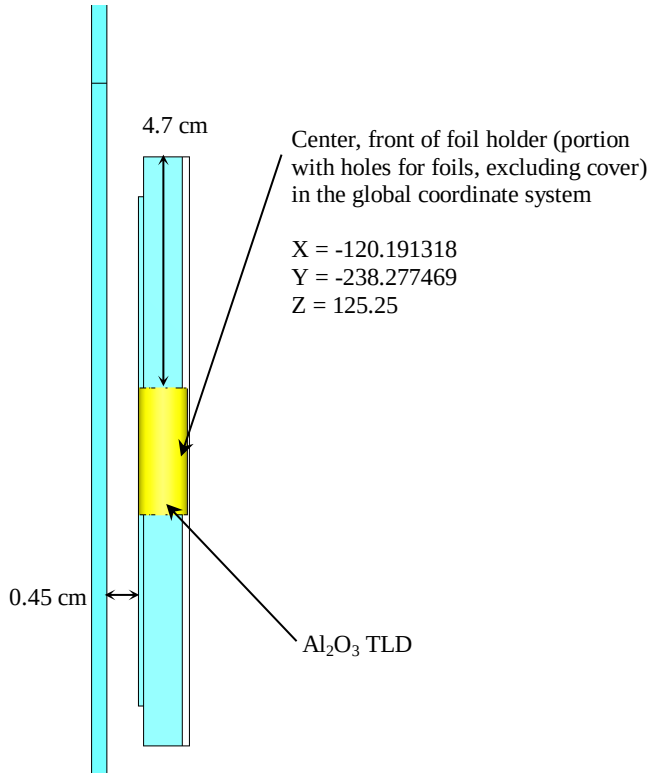

Figure 3-35. Plan view of the foil holder at the free field location.

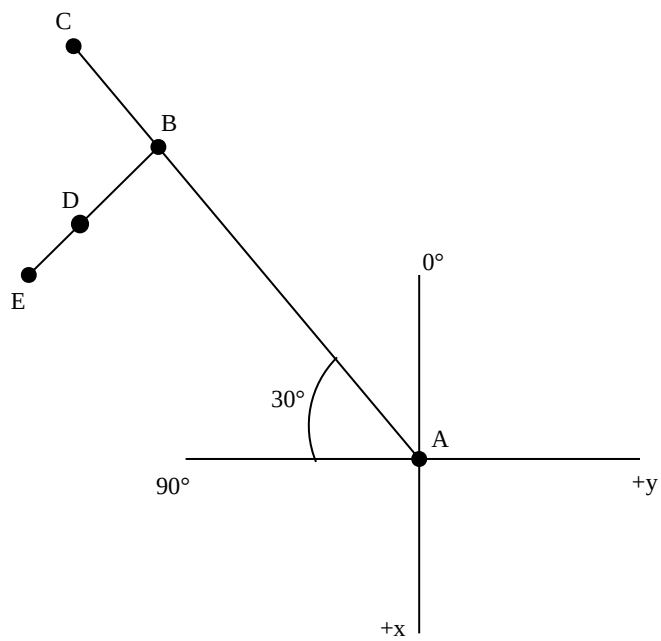

A: Axis of SILENE (0,0)
B: Front of foil holder, without cover, along 60° line (-133.225, -230.75)
C: Axis of free field stand (-135.2, -234.17)
D: Center, front of foil holder, Figure 3-35, (-120.19, -238.28)
E: End of bar supporting foil holder

Distances between points:
AC = 270.4 cm
BC = 3.95 cm
BD = 15.05 cm
BE = 30 cm

Trigonometry to calculate coordinates of Point D

$$D_x = [-(AC - BC)\sin 30°] + [BD\cos 30°]$$

$$D_x = [-(AC - BC)\cos 30°] - [BD\sin 30°]$$

Figure 3-36. Sketch to help locate the free field location (not to scale).

The neutron activation foils and Al_2O_3 TLDs in the scattering box were mounted on the aluminum plates described in Section 3.2.7. Figure 3-37 through Figure 3-40 show the location of the neutron activation foils and Al_2O_3 TLDs on these aluminum plates and the location of the aluminum plates on the shielding blocks of the scattering box. The dotted centerlines in Figure 3-37 through Figure 3-40 mark the center of the aluminum plates from left to right and the center of the lower aluminum plate from top to bottom. Though not drawn perfectly to scale, these centerlines lie exactly on the half-pitch location of the foils on either side of this line. The centerlines lie exactly between the adjacent foils. The vertical and horizontal pitch of the foils in the scattering box is 2.5 cm, like the foils in the foil holder. The bottoms of the Al_2O_3 TLDs in these figures are 15 cm above the bottom of the lower aluminum plate, which is consistent with Figure 1-73, Figure 1-75, and Figure 1-77. The vertical axis of the TLDs is collinear with the vertical centerlines drawn in the figures. Finally, remember that the foil configuration at each scattering box position (Figure 3-37 through Figure 3-40) is identical to the configuration within the foil holders given in Figure 3-30, including the pitch between the foils. Also, in the benchmark model, the cylindrical base of each foil contacts the aluminum mounting plate, which may not have been the case in the experiment because of the plastic bags.

ALARM-TRAN-PB-SHIELD-001

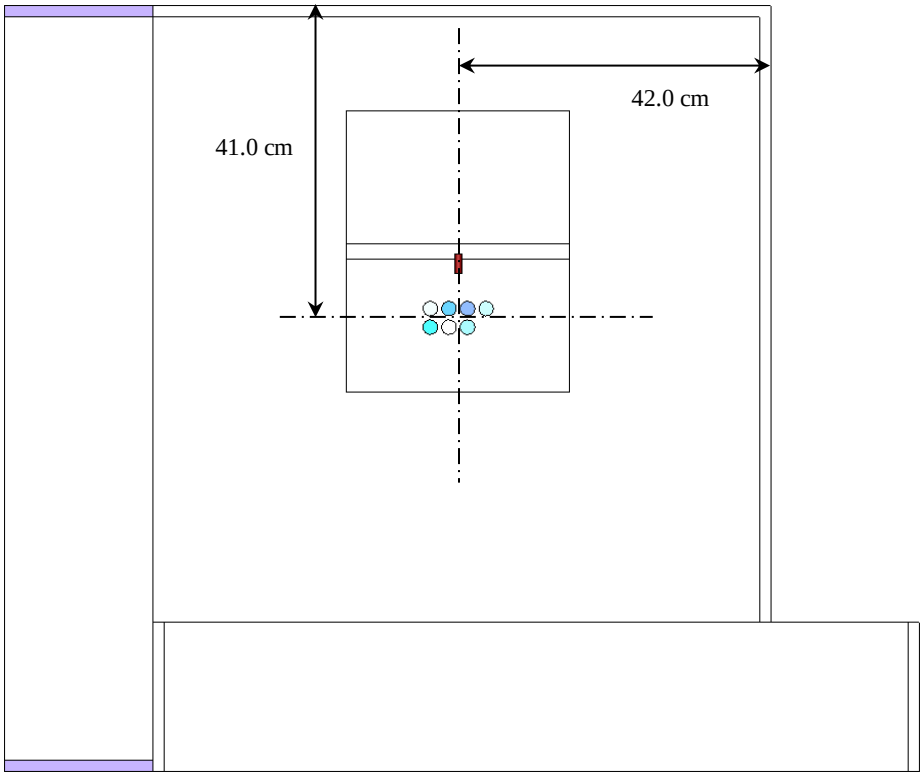

Figure 3-37. Scattering box position 1 (SB1) detector configuration.

ALARM-TRAN-PB-SHIELD-001

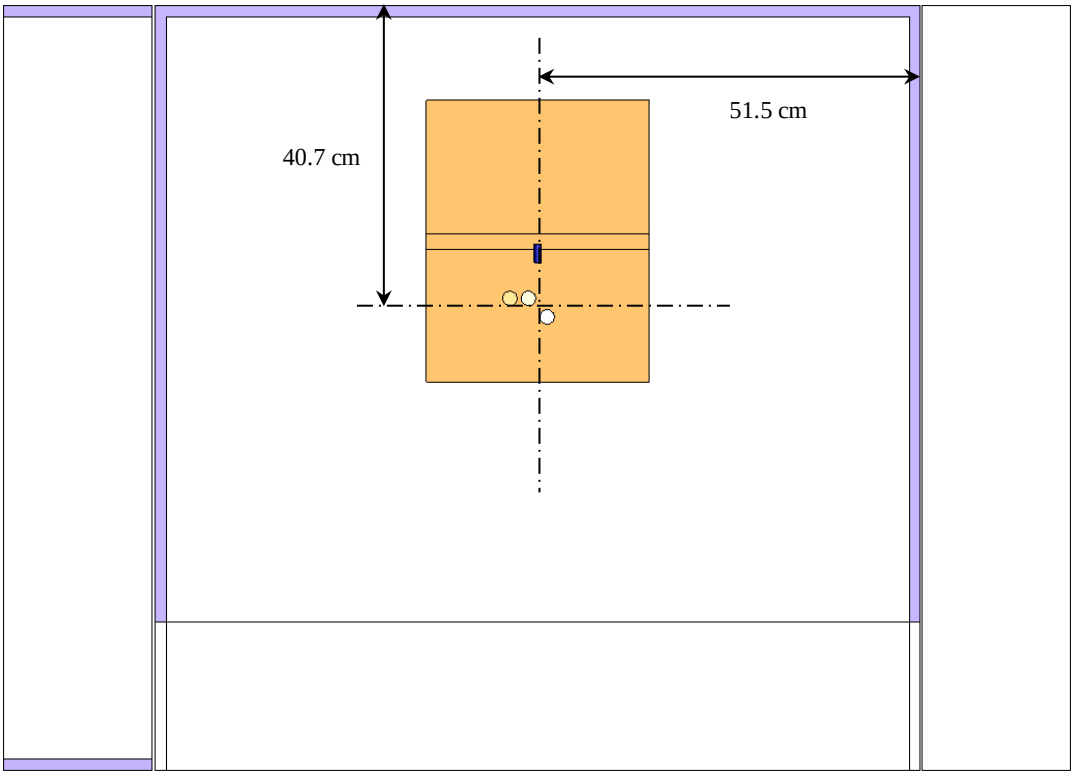

Figure 3-38. Scattering box position 2 (SB2) detector configuration.

ALARM-TRAN-PB-SHIELD-001

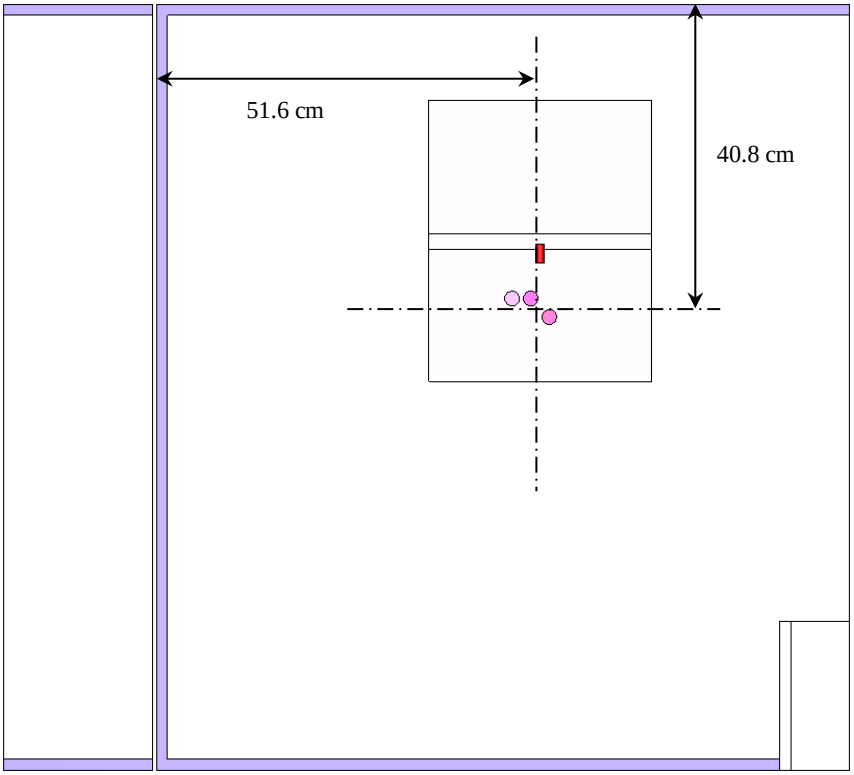

Figure 3-39. Scattering box position 3 (SB3) detector configuration.

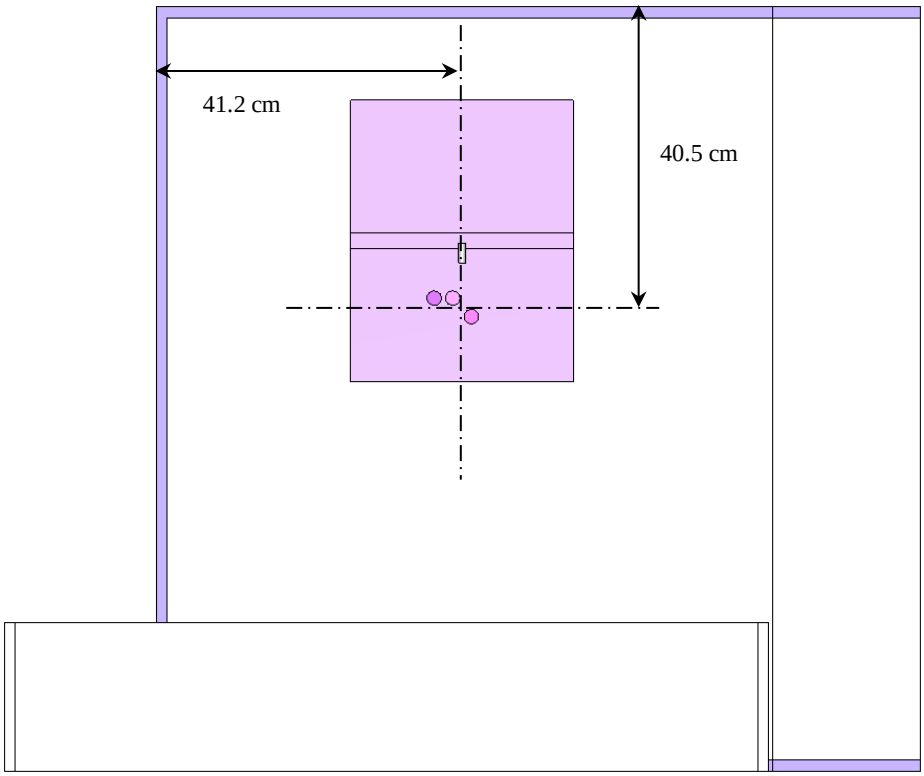

Figure 3-40. Scattering box position 4 (SB4) detector configuration.

3.2.11 TLD – The Al_2O_3 TLD provided by CEA Valduc is included in the benchmark model. The geometry is shown in Figure 3-41. The location of each of these TLDs has already been provided in Figure 3-32 through Figure 3-40.

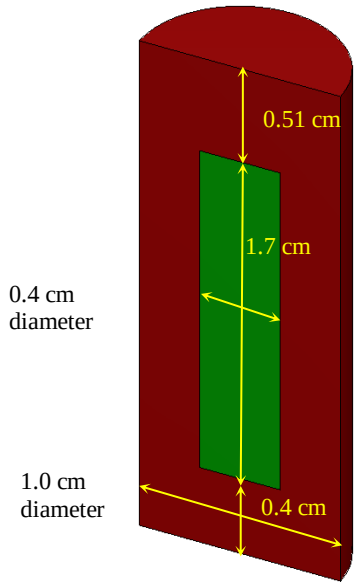

Figure 3-41. Al_2O_3 TLD benchmark model.

3.3 Material Data

Section 3.2 provided dimensions for the benchmark model. The following subsections provide benchmark model number densities for the materials described in sections 1.3, 1.4, and 1.5. Elemental and isotopic compositions are presented in Section 1.0 as weight percentages or atom percentages. The atom or weight percentage used in the number density calculations depends on how the numbers were presented in Section 1.0.

- If an exact percentage is listed in section 1.0 that percentage is used.
- Impurities, usually from a chemical analysis, that are below the minimum detectable limit are presented as < W. The percentage used is W/2. This was applied to the magnetite concrete, standard concrete, lower lead ring, and neutron activation foil compositions. However, benchmark simplifications have removed the impurities from the lower lead ring and neutron activation foil benchmark compositions.
- If a percentage range is provided, usually from a material standard, the middle of that range is used.
- Any standard material that lists a maximum amount of a constituent is presented as ≤ W. The percentage used is 2W/3. This was applied to S235JR, Z2 CN 18-10 (but not the Z2 CN 18-10 in the collimator boxes), A42, and AU4G.
- Material standards often report the major constituent as *balance*. The percentage used is the value needed to make the sum of constituents equal to 100%.
- In this report there are a few chemical analyses with unreported constituents that obviously must be present. These are handled in the same manner as anything reported as balance for a material standard.

There are a few exceptions to the methods listed above, and those will be explained explicitly in the following subsections. The tables in the following subsections provide elemental number densities in units of atoms per barn centimeter.

3.3.1 SILENE Room – The benchmark model number densities of SILENE concrete, the air in the SILENE room, and the low carbon steel used throughout the benchmark model, S235JR, are given in Table 3-3 through Table 3-5.

Table 3-3. SILENE concrete benchmark model number densities

Element	Number density (atom/b*cm)	Element	Number density (atom/b*cm)
H	1.0350E-02	Si	1.4170E-02
B-10	1.6020E-06	Ca	6.4240E-03
O	4.3470E-02	Fe	7.6210E-04
Al	1.5630E-03		

Table 3-4. SILENE air benchmark model number densities

Element	Number density (atom/b*cm)	Element	Number density (atom/b*cm)
H	5.7764E-07	O	1.0071E-05
C	6.9710E-09	Ar	2.1681E-07
N	3.6409E-05		

Table 3-5. Steel S235JR (low carbon steel) benchmark model number densities

Element	Number density (atom/b*cm)	Element	Number density (atom/b*cm)
C	4.4608E-04	Mn	8.0313E-04
N	2.7001E-05	Fe	8.3409E-02
P	3.5612E-05	Cu	2.7277E-04
S	3.4400E-05		

3.3.2 Collimator Boxes – The materials in the collimators, starting from the inside and working out, are stainless steel, copper, lead, PPB9, and stainless steel. The benchmark model number densities for these materials are given in Table 3-6 through Table 3-9. The stainless steel on the inside and outside of the collimator has the same composition, Z2 CN 18-10. The number densities in Table 3-6 are based on the chemical analysis provided when the collimator boxes were constructed (Table 1-3). The "other" PPB9 material reported in Table 1-4 is treated as a void in Table 3-9. The collimator box and shielding support stands are made of steel S235JR, whose composition is given in Table 3-5.

Table 3-6. Collimator box Z2 CN 18-10 stainless steel benchmark model number densities

Element	Number density (atom/b*cm)	Element	Number density (atom/b*cm)
C	7.8059E-05	Cr	1.6498E-02
N	1.6399E-04	Mn	1.3908E-03
Si	6.6763E-04	Fe	5.9991E-02
P	4.6917E-05	Ni	6.4693E-03
S	2.9239E-06		

Table 3-7. Collimator box copper benchmark model number densities

Element	Number density (atom/b*cm)
Cu	8.4533E-02

Table 3-8. Collimator box lead benchmark model number densities

Element	Number density (atom/b*cm)
Pb	3.2968E-02

Table 3-9. Collimator box PPB9 benchmark model number densities

Element	Number density (atom/b*cm)	Element	Number density (atom/b*cm)
H	4.9729E-02	Si	7.7056E-05
B	6.4833E-04	S	1.5437E-03
C	2.1133E-02	K	1.2216E-06
O	1.1304E-02	Ca	1.7721E-03
Mg	6.4618E-05	Sr	1.1171E-05
Al	5.1082E-05		

3.3.3 Collimator B Shielding – The shielding in front of collimator B is made of standard concrete. The benchmark model number densities for standard concrete are given in Table 3-10. As explained previously, the boron below the detectable limit of the standard concrete chemical analysis has been ignored. The frame of the standard concrete shield block is made of steel S235JR, whose benchmark model number densities are given in Table 3-5.

Table 3-10. Standard concrete benchmark model number densities

Element	Number density (atom/b*cm)	Element	Number density (atom/b*cm)
H	8.7957E-03	Cl	1.9534E-06
C	7.1499E-04	K	1.1761E-03
O	4.2402E-02	Ca	2.9963E-03
Na	9.4590E-04	Ti	6.6554E-05
Mg	4.2741E-04	Cr	2.6638E-06
Al	3.1006E-03	Mn	1.0085E-05
Si	1.3325E-02	Fe	4.9357E-04
P	4.4718E-05	Sr	4.7426E-06

3.3.4 Simplified Foil Holder – The foil holder benchmark model consists of a single material, AG3M aluminum alloy, whose benchmark model number densities are provided in Table 3-11.

Table 3-11. AG3M aluminum alloy benchmark model number densities

Element	Number density (atom/b*cm)	Element	Number density (atom/b*cm)
Mg	2.0623E-03	Mn	9.8107E-05
Al	5.7251E-02	Fe	7.7211E-05
Si	1.5353E-04	Cu	1.6964E-05
Ti	3.3780E-05	Zn	3.2975E-05
Cr	6.2195E-05		

3.3.5 Free Field Location – The free field location has been simplified to just a foil holder, neutron activation foils, and TLD. The benchmark number densities for these materials can be found in sections 3.3.4, 3.3.10, and 3.3.11, respectively.

3.3.6 Scattering Box – The scattering box is made of two magnetite concrete shield blocks and 4 standard concrete shield blocks. The benchmark model number densities for each of these materials are provided in Table 3-12 and Table 3-10, respectively. Like the standard concrete shield block, the boron under the detectable limit of the magnetite chemical analysis has been ignored. The concrete frames are made of steel S235JR as is the support stand (Table 3-5).

Table 3-12. Magnetite concrete benchmark model number densities

Element	Number density (atom/b*cm)	Element	Number density (atom/b*cm)
H	7.4572E-03	Cl	3.3123E-06
C	7.0396E-04	K	1.6820E-04
O	4.9095E-02	Ca	3.3930E-03
Na	2.2475E-04	Ti	8.3412E-05
Mg	5.4114E-04	Cr	1.3551E-05
Al	4.5264E-04	Mn	7.6951E-05
Si	2.2746E-03	Fe	2.3106E-02
P	3.4122E-04	Sr	5.3612E-06

3.3.7 Scattering Box Detector Mounting Plate – The benchmark number densities of these plates are given in Table 3-13.

Table 3-13. Aluminum benchmark model number densities

Element	Number density (atom/b*cm)
Al	6.0307E-02

3.3.8 SILENE Critical Assembly – The primary structural material of the SILENE critical assembly is Z2 CN 18-10 stainless steel. The control rod contains a core of natural cadmium, and there is a support plate that sits on the concrete floor that is A42 steel. The benchmark model number densities of these materials are given in Table 3-14 through Table 3-16, respectively. The number densities in Table 3-14 are based on the standard composition of Z2 CN 18-10 (Table 1-8).

Table 3-14. Standard composition Z2 CN 18-10 benchmark model number densities

Element	Number density (atom/b*cm)	Element	Number density (atom/b*cm)
C	7.9221E-05	Cr	1.6469E-02
Si	1.1293E-03	Mn	1.1546E-03
P	4.0960E-05	Fe	5.9577E-02
S	2.9674E-05	Ni	8.1057E-03

Table 3-15. Natural cadmium benchmark model number densities

Element	Number density (atom/b*cm)
Cd	4.6340E-02

Table 3-16. A42 steel benchmark model number densities

Element	Number density (atom/b*cm)	Element	Number density (atom/b*cm)
C	6.5600E-04	S	6.0938E-05
N	2.0251E-05	Fe	8.4435E-02
P	6.3085E-05		

In order to calculate the benchmark number densities of the uranyl nitrate fuel solution, the SCALE 6.2 material input processor was used. The properties in Table 1-12 and Table 1-13 were provided to SCALE 6.2 as a solution composition, and SCALE calculated the number densities. However, all of the data in Table 1-13 actually over-describe the solution input for SCALE. Therefore, in the SCALE input the acid molarity was left as a free parameter to be calculated by the code, which resulted in a solution in equilibrium. The resulting molarity calculated by SCALE is within the uncertainty band of the data provided in Table 1-13. The benchmark number densities of the uranyl nitrate fuel solution are provided in Table 3-17.

Table 3-17. Uranyl nitrate benchmark model number densities

Element	Number density (atom/b*cm)	Element	Number density (atom/b*cm)
H	6.2393E-02	^{235}U	1.6766E-04
N	1.5410E-03	^{236}U	4.5567E-07
O	3.5592E-02	^{238}U	1.1710E-05
^{234}U	1.0656E-06		

3.3.9 Lead Reflector – The benchmark number densities of the lead reflector / shield surrounding SILENE are given in Table 3-18. The number densities in Table 3-18 are based on an average of the two samples given in Table 1-10. The lead reflector has two steel portions: the upper and lower steel rings. The number densities for this material are given in Table 3-19.

Table 3-18. Lead reflector benchmark model number densities

Element	Number density (atom/b*cm)	Element	Number density (atom/b*cm)
Al	1.9980E-08	Cu	4.0828E-07
Cr	2.1060E-09	Ag	9.3708E-07
Fe	3.4391E-08	Sb	5.8112E-09
Ni	8.6684E-08	Pb	3.2520E-02

Table 3-19. Composition of XC18 Steel benchmark model number densities

Element	Number density (atom/b*cm)	Element	Number density (atom/b*cm)
C	6.7082E-04	S	3.5474E-05
Si	2.5312E-04	Mn	5.2624E-04
P	2.4482E-05	Fe	8.4044E-02

3.3.10 Neutron Activation Foils – The exact composition of the neutron activation foils are defined by the mass, dimensions, and analysis labels in Table 1-14 and the chemical analysis reports in Table 1-15 through Table 1-23. The one exception to this is the titanium foil. Since no activation products were reported for the titanium foil, these foils were assumed to be natural titanium at theoretical density. Table 3-20 through Table 3-26 list the benchmark number densities for all the neutron activation foils. It was found that the impurities have a negligible effect on the benchmark model. Therefore, the impurities have been excluded from the benchmark model, but the major foil constituents have number densities as if the impurities have been included. The one exception to this is the Mn in the Fe foil because ^{55}Mn(n,γ) and ^{56}Fe(n,p) produce the same activation product, ^{56}Mn.

Table 3-20. Collimator A neutron activation foil benchmark model number densities

Element	Number density (atom/b*cm)	Element	Number density (atom/b*cm)
In	4.0919E-02	Mg	4.2951E-02
Mn	2.6288E-04	Ti	5.6615E-02
Fe	8.3077E-02	Au	6.0182E-02
Ni	9.4335E-02	Co	9.4397E-02

Table 3-21. Collimator B neutron activation foil benchmark model number densities

Element	Number density (Atom/b*cm)	Element	Number density (Atom/b*cm)
In	4.1604E-02	Mg	4.2872E-02
Mn	2.6324E-04	Ti	5.6616E-02
Fe	8.3191E-02	Au	5.9715E-02
Ni	9.4172E-02	Co	9.4169E-02

Table 3-22. Free field neutron activation foil benchmark model number densities

Element	Number density (atom/b*cm)	Element	Number density (atom/b*cm)
In	3.8768E-02	Mg	4.3070E-02
Mn	2.6263E-04	Ti	5.6615E-02
Fe	8.2997E-02	Au	6.0649E-02
Ni	9.2112E-02	Co	9.4300E-02

Table 3-23. Scattering box 1 neutron activation foil benchmark model number densities

Element	Number density (atom/b*cm)	Element	Number density (atom/b*cm)
In	3.8852E-02	Mg	4.2986E-02
Mn	2.6342E-04	Ti	5.6615E-02
Fe	8.3248E-02	Au	6.2130E-02
Ni	9.4319E-02	Co	9.4349E-02

Table 3-24. Scattering box 2 neutron activation foil benchmark model number densities

Element	Number density (atom/b*cm)	Element	Number density (atom/b*cm)
Ni	9.4319E-02	Au	6.3103E-02
		Co	9.4349E-02

Table 3-25. Scattering box 3 neutron activation foil benchmark model number densities

Element	Number density (atom/b*cm)	Element	Number density (atom/b*cm)
Ni	9.4140E-02	Au	6.0806E-02
		Co	9.4544E-02

Table 3-26. Scattering box 4 neutron activation foil benchmark model number densities

Element	Number density (atom/b*cm)	Element	Number density (atom/b*cm)
Ni	9.4092E-02	Au	6.0378E-02
		Co	9.4364E-02

3.3.11 TLD – The Valduc TLD consists of the AU4G aluminum alloy holder filled with the Al_2O_3 TLD powder. The benchmark number densities for these are given in Table 3-27 and Table 3-28, respectively. In Table 1-25, the weight percentage of titanium plus zirconium is reported as ≤ 0.2. Therefore, the weight percentage for each of these elements was assumed to be 0.2/3, for a total of 0.4/3 ([2/3]*0.2).

Table 3-27. AU4G aluminum alloy benchmark model number densities

Element	Number density (atom/b*cm)	Element	Number density (atom/b*cm)
Mg	4.8564E-04	Mn	1.6881E-04
Al	5.8703E-02	Fe	1.0065E-04
Si	3.3021E-04	Cu	9.5526E-04
Ti	2.3485E-05	Zn	3.4388E-05
Cr	2.1620E-05	Zr	1.2323E-05

Table 3-28. Al_2O_3 TLD powder benchmark model number densities

Element	Number density (atom/b*cm)	Element	Number density (atom/b*cm)
O	3.5836E-02	Al	2.3891E-02

3.4 Source Strength and Spectra

The exact source strength and source spectra of this benchmark were not measured by the experimentalist. Rather, the number of fissions that occurred was measured. The number of fission events measured during this benchmark experiment was 2.14e17. Therefore, the source strength of the benchmark model is 2.14e17 fissions × $\bar{\nu}$ neutrons per fission.

3.4.1 Response Functions and Normalization - In order for the results of the benchmark model to match the measured activation (Bq/g) and TLD dose (Gy) results, proper response functions must be applied along with the correct normalization.

3.4.1.1 Neutron Activation Foil Response Functions and Normalization – Many sources of neutron activation foil response functions (activation cross sections) are available to simulate this benchmark experiment. Examples are cross sections based on ENDF/B-VII, JEFF 3.2,[a] JENDL 4.0,[b] or IRDF-2002 (International Reactor Dosimetry File).

The complete tally normalization per unit fluence, M_n [(Bq / g) / (n / cm^2)], applied in the benchmark model for the neutron activation reactions is

$$M_n = \frac{N_{fission}\bar{\nu}N_i\sigma_i\lambda_a e^{-\lambda_a T}}{\rho} = \frac{2.14e17 * \bar{\nu}N_i\sigma_i\lambda_a e^{-\lambda_a * 155}}{\rho}$$

where $N_{fission}$ is the number of fission events, N_i is the target isotope number density (atom/b*cm), σ_i is the microscopic activation cross section of the target (b), λ_a is the activation product decay constant (1/sec = Bq), $e^{-\lambda_a T}$ accounts for decay events that occur between the start of the critical pulse and the time the dosimetrist assumed the critical pulse ended (T sec), and ρ is the density of the activation foil (g/cm^3). $N_{fission}$ has been specified in Section 3.4, and $\bar{\nu}$ must be calculated. All benchmark model number densities are provided in tables in Section 3.3. The activation cross sections are energy dependent and must be selected by the user. The decay constants are calculated using the activation product half-lives ($\lambda = \ln 2/t_{1/2}$), which must also be selected by the user. The time between the beginning of the critical pulse and when the dosimetrist reported the measured activities, T in the above equation, is 155 sec, which is derived from data in Section 1.7. Finally, ρ is derived from data in Table 1-14. Calculating the neutron fluence and multiplying that by the normalization factor M_n provides computational results in units of Bq/g.

3.4.1.2 Photon TLD Dose Response Functions and Normalization – The ORNL and Valduc absorbed dose TLD calibrations were both for kerma in air. However, the Valduc TLD air kerma calibration was for ^{60}Co while ORNL's calibration was for ^{137}Cs. Example air kerma response functions are the Henderson conversion factors[c] and the air kerma factors in ICRU-44[d] and ICRU-57.[e]

The complete tally normalization, M_p applied in the benchmark model for the TLD dose is

$$M_p = \frac{N_{fission}\bar{\nu}}{F} = \frac{2.14e17 * \bar{\nu}}{F}$$

[a] A. Santamarina, D. Bernard, et. al., "The JEFF-3.1.1 Nuclear Data Library, JEFF Report 22," Organisation for Economic Co-operation and Development / Nuclear Energy Agency, 2009.
[b] K. Shibata, et. al., "JENDL-4.0: A New Library for Nuclear Science and Engineering," J. Nucl. Sci. Technol. Vol. 48(1), p. 1, 2011.
[c] B. J. Henderson, "Conversion of neutron or gamma ray flux to absorbed dose rate," XDC-59-8-179, Oak Ridge National Laboratory, 1959.
[d] ICRU, "Tissue Substitutes in Radiation Dosimetry and Measurement," Report 44, 1989.
[e] ICRU, "Conversion Coefficients for use in Radiological Protection against External Radiation," Report 57, 1998.

where the parameter F is equal to 1 or 3600, which depends on whether or not the photon dose response function is on a per unit flux or fluence basis. If the photon response function has units per fluence (e.g., Gy / [photons / cm^2]), then F will equal 1.0. However, if the response function has units per flux (e.g., [Gy / hr] / [photons / $cm^2 \times$ sec]), then F will equal 3600. This factor of 3600 is the number of seconds in an hour and is necessary because the experiment is normalized to the total number of fissions and not a fission rate.

3.5 Experimental and Benchmark Model Neutron and Photon Data

The benchmark values to be calculated using the benchmark model are total activity in Bq/g, following the pulse without any additional decay daughter products, and absorbed dose in Gy. The geometry simplifications made while creating the benchmark model did not introduce any significant biases. The experimental data given in Table 1-27 and Table 1-28 and their uncertainties given in Table 2-14 through Table 2-20 are the benchmark values. Therefore, the activity and dose reported in Table 3-29 and Table 3-30, respectively, are exactly the measured values in Table 1-27 and Table 1-28. The uncertainties of the activity and dose are the experimental uncertainties due to the measurement uncertainties and various experimental parameters in Table 2-14 through Table 2-20, which summarize all the details in Appendix I. All the ^{54}Mn activities were rejected by the dosimetrist. The Al_2O_3 TLD measurements at scattering box positions 1 and 2 did not include any uncertainty values, so these measurements were rejected by the evaluators. Additionally, the evaluators rejected the Al_2O_3 TLD measurement at scattering box position 4 due to the large measurement uncertainty.

ALARM-TRAN-PB-SHIELD-001

Table 3-29. Benchmark neutron activation foil data

Position	Reaction	Activity (Bq/g)	Absolute uncertainty	Relative uncertainty
Case 1 collimator A	$^{59}Co(n,\gamma)^{60}Co$	6.090E+01	4.297E+00	0.0706
	$^{197}Au(n,\gamma)^{198}Au$	6.880E+04	4.687E+03	0.0681
	$^{115}In(n,\gamma)^{116}In$	7.950E+06	5.917E+05	0.0744
	$^{115}In(n,n'\gamma)^{115m}In$	6.100E+03	3.863E+02	0.0633
	$^{56}Fe(n,p)^{56}Mn$ + $^{55}Mn(n,\gamma)^{56}Mn$	2.020E+03	1.393E+02	0.0689
	$^{24}Mg(n,p)^{24}Na$	2.480E+01	1.604E+00	0.0647
	$^{58}Ni(n,p)^{58}Co$	6.860E+00	4.358E-01	0.0635
Case 2 collimator B	$^{59}Co(n,\gamma)^{60}Co$	3.230E+01	2.530E+00	0.0783
	$^{197}Au(n,\gamma)^{198}Au$	3.101E+04	2.575E+03	0.0830
	$^{115}In(n,\gamma)^{116}In$	3.840E+06	3.230E+05	0.0841
	$^{115}In(n,n'\gamma)^{115m}In$	9.400E+02	1.009E+02	0.1074
	$^{56}Fe(n,p)^{56}Mn$ + $^{55}Mn(n,\gamma)^{56}Mn$	1.040E+03	7.700E+01	0.0740
	$^{24}Mg(n,p)^{24}Na$	5.520E+00	6.547E-01	0.1186
	$^{58}Ni(n,p)^{58}Co$	1.271E+00	1.420E-01	0.1117
Case 3 free field	$^{59}Co(n,\gamma)^{60}Co$	6.270E+01	4.401E+00	0.0702
	$^{197}Au(n,\gamma)^{198}Au$	6.430E+04	4.237E+03	0.0659
	$^{115}In(n,\gamma)^{116}In$	7.850E+06	5.578E+05	0.0711
	$^{115}In(n,n'\gamma)^{115m}In$	5.210E+03	3.290E+02	0.0631
	$^{56}Fe(n,p)^{56}Mn$ + $^{55}Mn(n,\gamma)^{56}Mn$	2.084E+03	1.341E+02	0.0644
	$^{24}Mg(n,p)^{24}Na$	2.640E+01	1.868E+00	0.0708
	$^{58}Ni(n,p)^{58}Co$	6.340E+00	4.017E-01	0.0634
Case 4 scattering box 1	$^{59}Co(n,\gamma)^{60}Co$	2.440E+01	1.800E+00	0.0738
	$^{197}Au(n,\gamma)^{198}Au$	2.412E+04	1.711E+03	0.0709
	$^{115}In(n,\gamma)^{116}In$	2.910E+06	2.271E+05	0.0780
	$^{115}In(n,n'\gamma)^{115m}In$	3.230E+02	3.393E+01	0.1050
	$^{56}Fe(n,p)^{56}Mn$ + $^{55}Mn(n,\gamma)^{56}Mn$	8.810E+02	5.919E+01	0.0672
	$^{24}Mg(n,p)^{24}Na$	1.206E+00	1.629E-01	0.1351
	$^{58}Ni(n,p)^{58}Co$	3.230E-01	4.246E-02	0.1315
Case 5 scattering box 2	$^{59}Co(n,\gamma)^{60}Co$	2.810E+01	2.055E+00	0.0731
	$^{197}Au(n,\gamma)^{198}Au$	2.583E+04	1.804E+03	0.0698
	$^{58}Ni(n,p)^{58}Co$	1.898E-01	2.137E-02	0.1126
Case 6 scattering box 3	$^{59}Co(n,\gamma)^{60}Co$	4.570E+01	3.285E+00	0.0719
	$^{197}Au(n,\gamma)^{198}Au$	4.370E+04	2.999E+03	0.0686
	$^{58}Ni(n,p)^{58}Co$	1.750E+00	1.252E-01	0.0716
Case 7 scattering box 4	$^{59}Co(n,\gamma)^{60}Co$	4.120E+01	2.997E+00	0.0727
	$^{197}Au(n,\gamma)^{198}Au$	3.900E+04	2.702E+03	0.0693
	$^{58}Ni(n,p)^{58}Co$	1.830E+00	1.323E-01	0.0723

ALARM-TRAN-PB-SHIELD-001

Table 3-30. Benchmark TLD dose data

Position	TLD Type	Dose (Gy)	Absolute uncertainty	Relative uncertainty
Case 1 collimator A	Al_2O_3	8.200E-01	6.640E-02	0.0810
Case 2 collimator B	Al_2O_3	5.500E-01	6.528E-02	0.1187
Case 3 free field	Al_2O_3	5.620E-01	4.410E-02	0.0785
Case 6 scattering box 3	Al_2O_3	4.200E-01	3.296E-02	0.0785

4.0 RESULTS OF SAMPLE CALCULATIONS

This section presents the results of several sample calculations, starting with simulations of the source through to simulations of the detector responses. The codes used for these sample calculations include MCNP6, SCALE 6.2, COG 11.1[a], and TRIPOLI-4[b]. It is important to point out that all of these simulations are static or steady state simulations. All of these simulations assume the materials are at room temperature, the fuel solution has a fixed volume / density, all fissions occur at exactly the same time (t=0 seconds), all activated nuclei are created at exactly the same time (also t=0 seconds), and the control rod is fully withdrawn before the excursion begins. None of the dynamic aspects of this critical excursion have been modeled, but some of them have been evaluated via the sensitivity and uncertainty analysis discussed in Section 2.0.

4.1 Source Strength and Spectra

The exact source strength and source spectra of this benchmark were not measured by the experimentalist. Rather, the number of fissions that occurred was measured. This leaves it to the benchmark evaluators to calculate the number of neutrons produced per fission, $\bar{\nu}$, the energy spectrum of the neutrons born from fission events, χ, and the spatial distribution of neutrons born from fission events. This can be done using two different methods:

1) An eigenvalue calculation can be performed that tallies the activity created in the neutron activation foils and the absorbed dose deposited in the TLDs. In this case $\bar{\nu}$, χ, and the spatial distribution of fission neutrons are being calculated internally by the radiation transport code. This method is referred to as the one-step method and is used to calculate all COG 11.1 results presented in this report and TRIPOLI-4 results for the absorbed dose deposited in the TLD.
2) Alternatively, an eigenvalue calculation can be performed that tallies $\bar{\nu}$, χ, and the spatial distribution of fission neutrons. Then the information in those tallies can be used to create a source in a second fixed-source simulation of the activity created in the neutron activation foils and the absorbed dose deposited in the TLDs. This method is referred to as the two-step method and is the method employed to calculate all MCNP6 and SCALE 6.2 results presented in this report and TRIPOLI-4 results for the activity of the neutron activation foils.

The following discussion of the fixed-source energy and spatial distributions are specific to the two-step method using MCNP6. Similar information was required to use the two-step method with the SCALE 6.2 simulations, but the details are slightly different. More information is provided in Appendix A.

The number of fission events measured during this benchmark experiment was 2.14e17. Therefore, the source strength of the fixed-source MCNP model is 5.217e17 neutrons (2.14e17 fissions × 2.438 neutrons per fission). The system $\bar{\nu}$ (2.438 neutrons per fission) was calculated with MCNP6 using ENDF/B-VII.1 room temperature cross sections. The calculated eigenvalue of the benchmark model, with the cadmium control rod fully removed, from this MCNP6 simulation was 1.02538 ± 0.00002, so the assembly was more than 3 dollars above delayed critical.

[a] R. M. Buck and E. M. Lent, "COG11 Manual Supplement," LLNL-SM-461824, Lawrence Livermore National Laboratory, November 8, 2010.
[b] TRIPOLI-4® Project Team, "TRIPOLI-4® Version 4 User Guide," CEA-R-6169, Commissariat à l'Énergie Atomique et aux Énergies Alternatives, Saclay, 2008.

The tally of the energy distribution of neutrons born from fission in the MCNP6 eigenvalue calculation was converted to a probability distribution and plotted in Figure 4-1. The distribution of fission neutrons in the axial direction is plotted in Figure 4-2. For each axial layer, a radial distribution of fission neutrons was created. There are 72 axial zones, each with its own radial distribution. Plotted in Figure 4-3 are the radial distributions for axial zones 1 (bottom), 36 (middle), and 72 (top). Tables of the data plotted in Figure 4-1 through Figure 4-3 are presented in Appendix C along with the tally uncertainties from the MCNP6 eigenvalue calculation. Also included in Appendix C are the tabular data for all the other radial distributions not plotted in Figure 4-3.

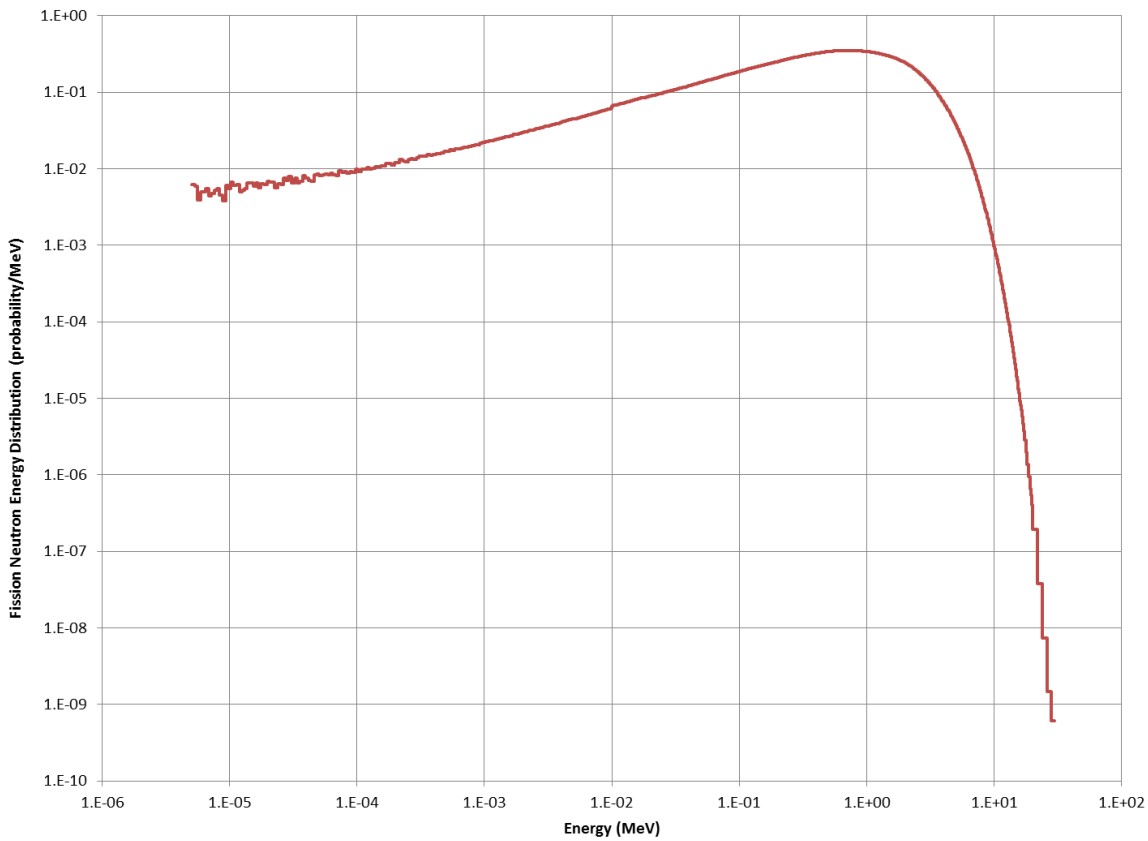

Figure 4-1. SILENE pulse 2 energy distribution of fission neutrons calculated with MCNP6 using ENDF/B-VII.1 cross section data (.80c).

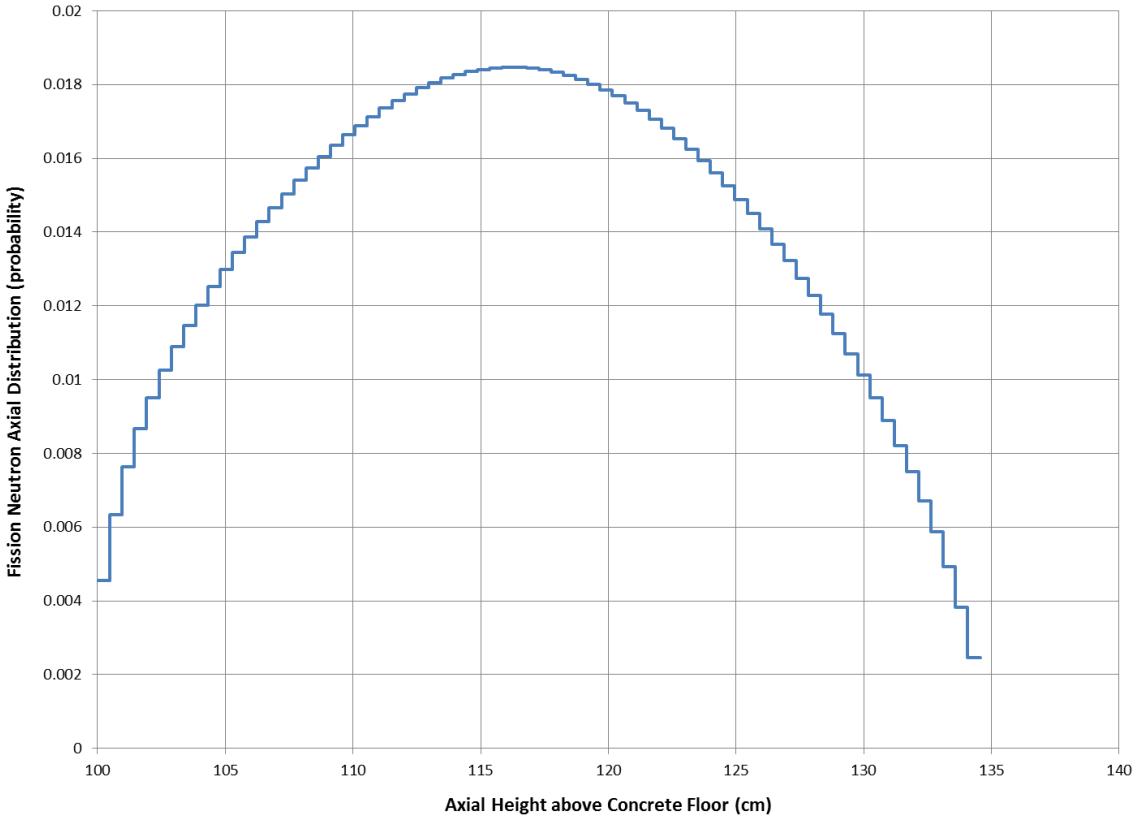

Figure 4-2. SILENE Pulse 2 axial distribution of fission neutrons calculated with MCNP6 using ENDF/B-VII.1 cross section data (.80c).

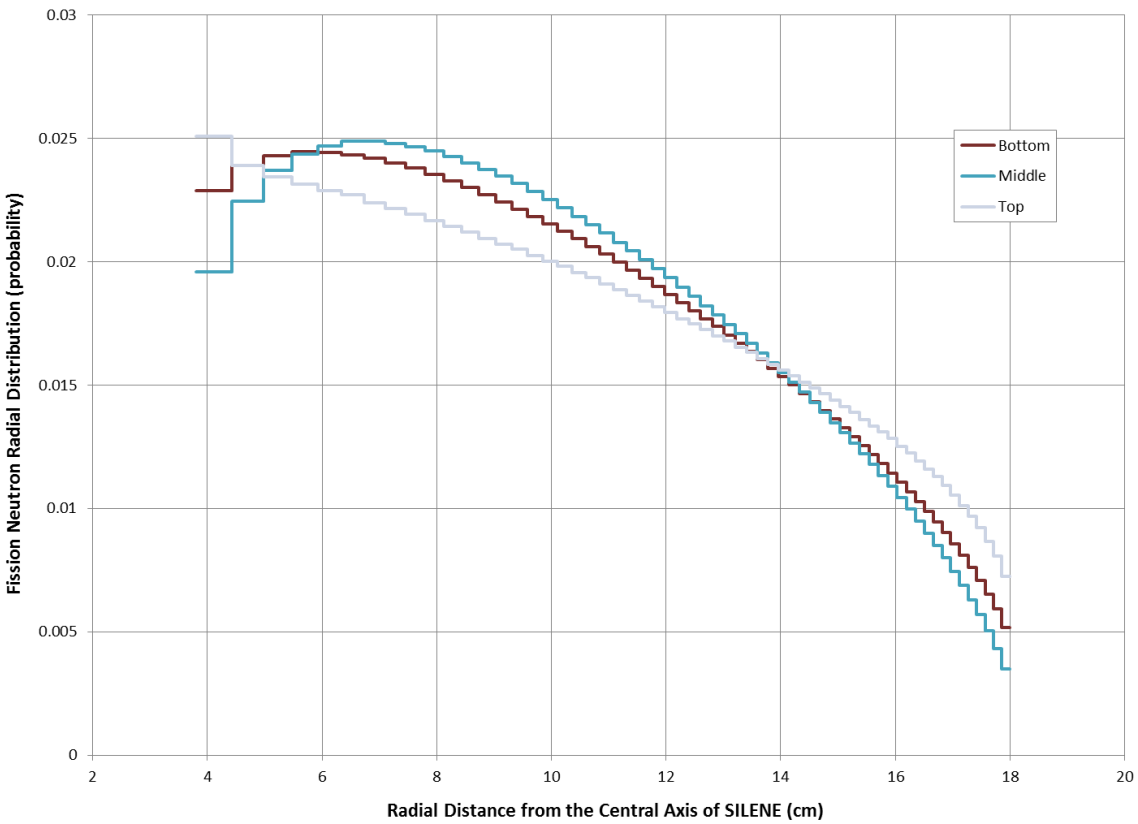

Figure 4-3. Select SILENE pulse 2 Radial distributions of fission neutrons calculated with MCNP6 using ENDF/B-VII.1 cross section data (.80c).

4.2 Response Functions and Normalization

The fundamental normalization of the benchmark model is the source strength, 5.217e17 neutrons, as presented in section 4.1. However, in order for the results of the benchmark model to match the measured activation (Bq/g) and TLD dose (Gy) results, proper response functions must be applied and additional normalization factors are needed.

4.2.1 Neutron Activation Foil Response Functions and Normalization – Two sources of neutron activation foil response functions (activation cross sections) have been evaluated. These are ENDF/B-VII.1 and IRDF-2002 (International Reactor Dosimetry File). In general, the performance of these two sources of response functions has been very similar, with the exception of the indium reactions. The difference between the ^{115}In(n,n'γ)^{115m}In response function is understandable. The ENDF/B-VII.1 cross section data were evaluated for a transport library (80c MCNP6 and ce_v7.1_endf SCALE 6.2), which contains data to predict the nucleus being excited to different states but no data to accurately predict the full de-excitation process back to the ground state. Rather, transport libraries usually predict the de-excitation process on an average basis. IRDF-2002 is a reactor dosimetry library as the name implies and is specifically tailored to model this detailed de-excitation process. The reason for the significant difference between the ^{115}In(n,γ)^{116}In response function is unknown. The expectation for (n,γ) reactions was that these two libraries would perform very similarly, as with the gold and cobalt reactions. Plots of the preferred response functions are available in Figure 4-4 through Figure 4-12. The values are not listed anywhere in this report due to the large number of data points in continuous energy cross sections.

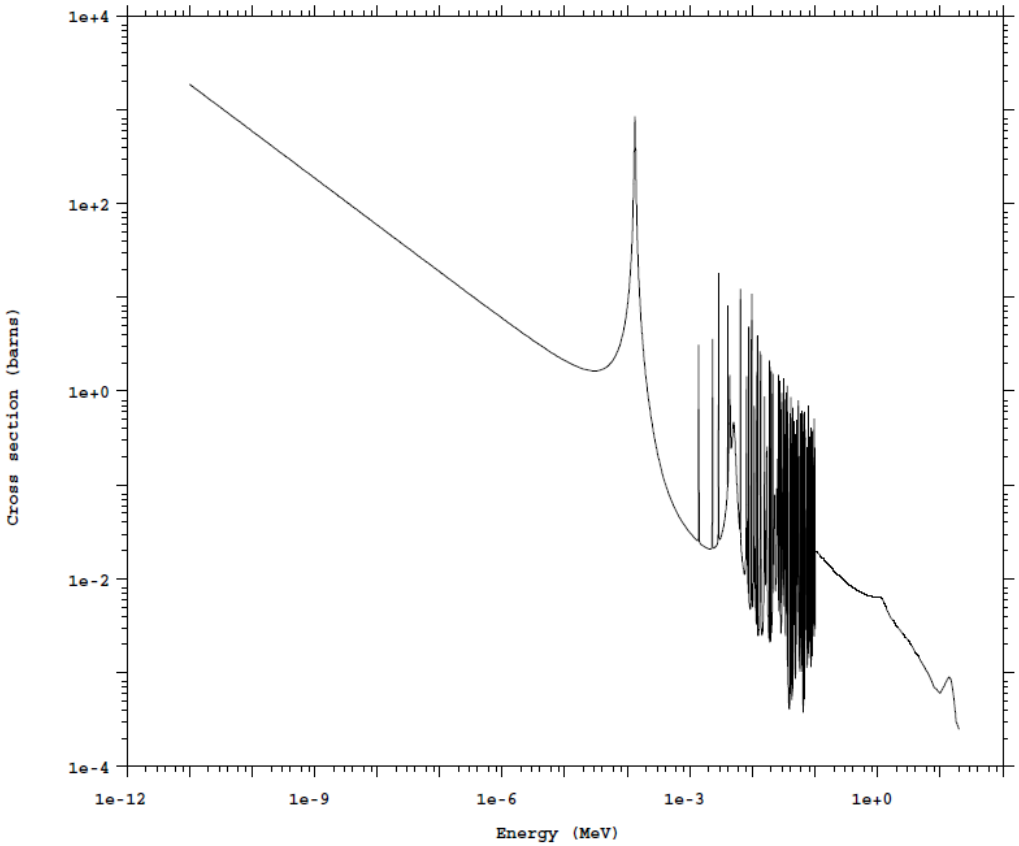

Figure 4-4. ^{59}Co (n,γ) Cross section from MCNP ENDF/B-VII.1 (.80c).

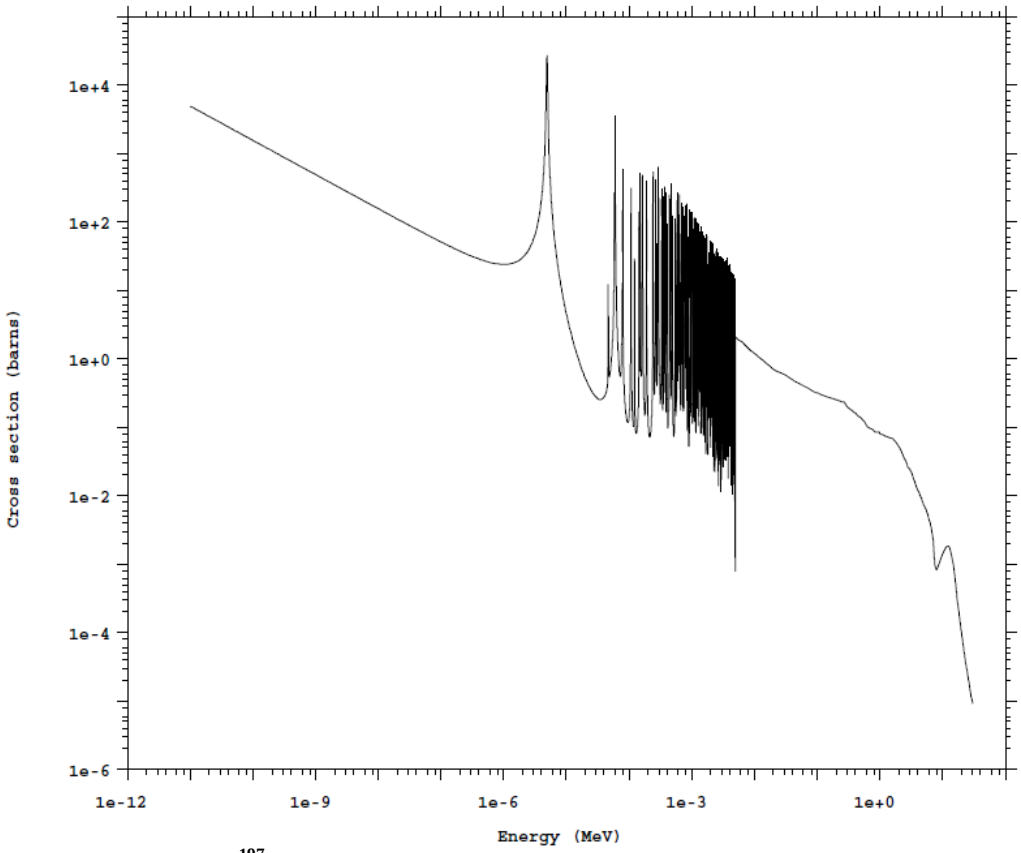

Figure 4-5. ^{197}Au (n,γ) Cross section from MCNP ENDF/B-VII.1 (.80c).

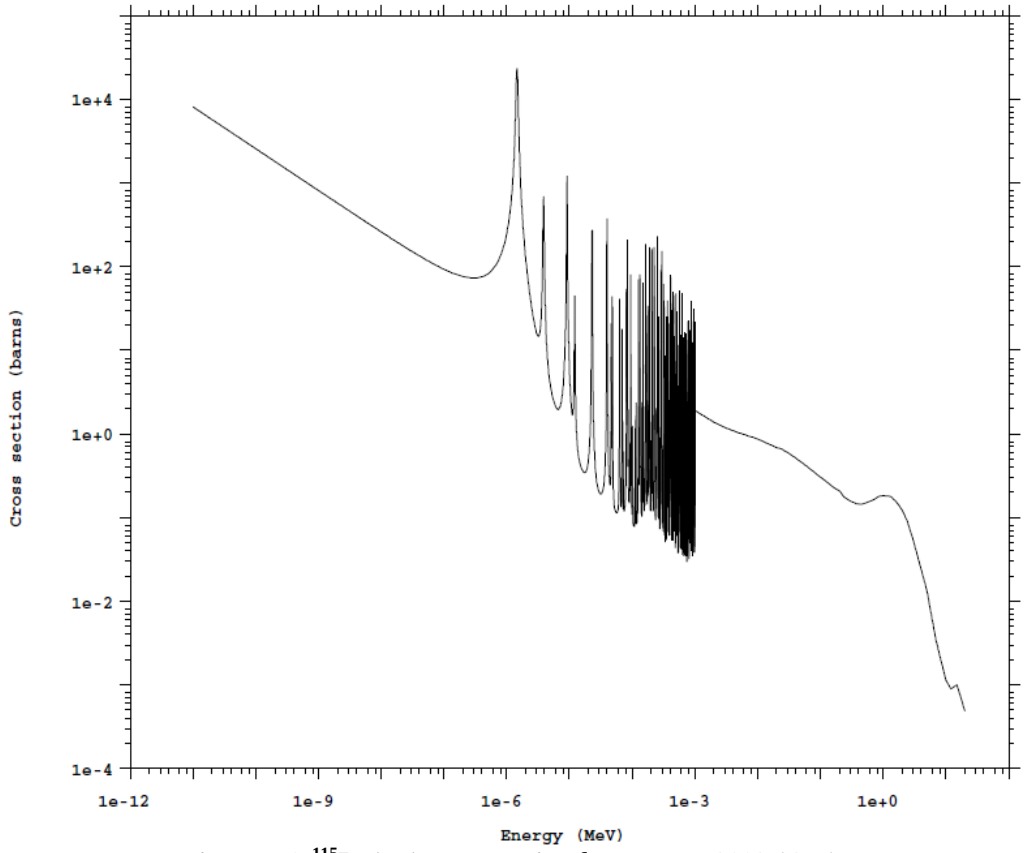

Figure 4-6. ^{115}In (n,γ) cross section from IRDF-2002 (.34y).

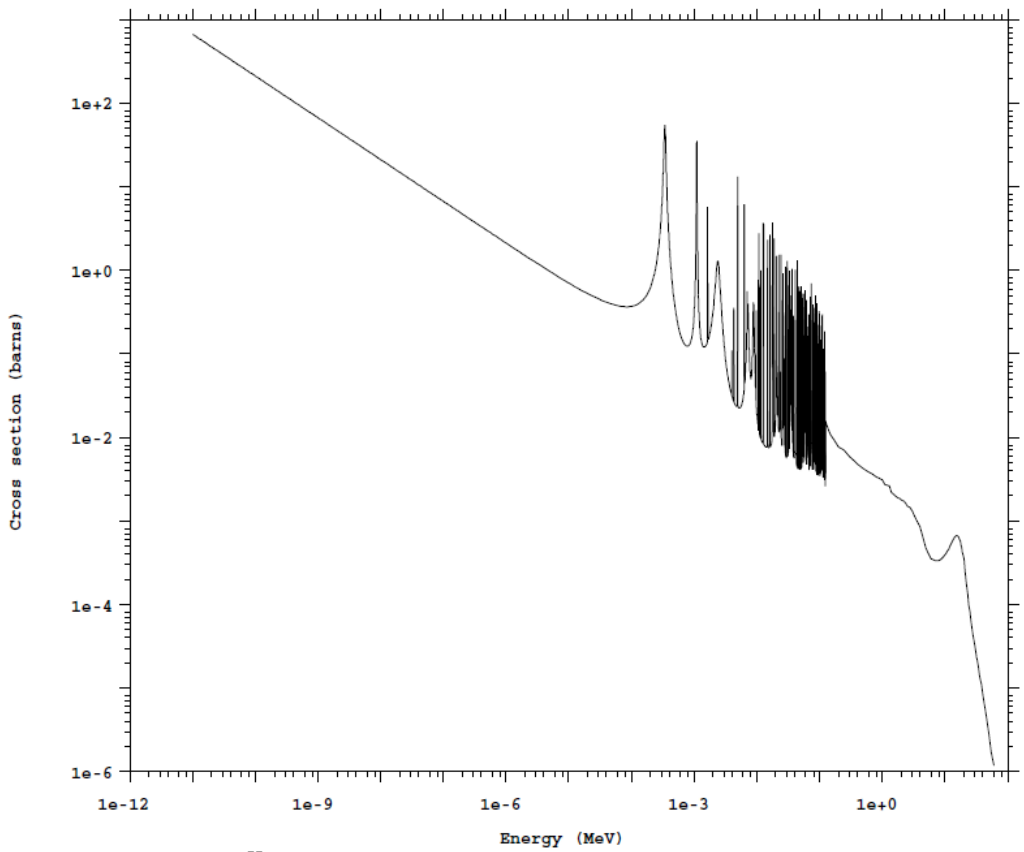

Figure 4-7. ^{55}Mn (n,γ) cross section from MCNP ENDF/B-VII.1 (.80c).

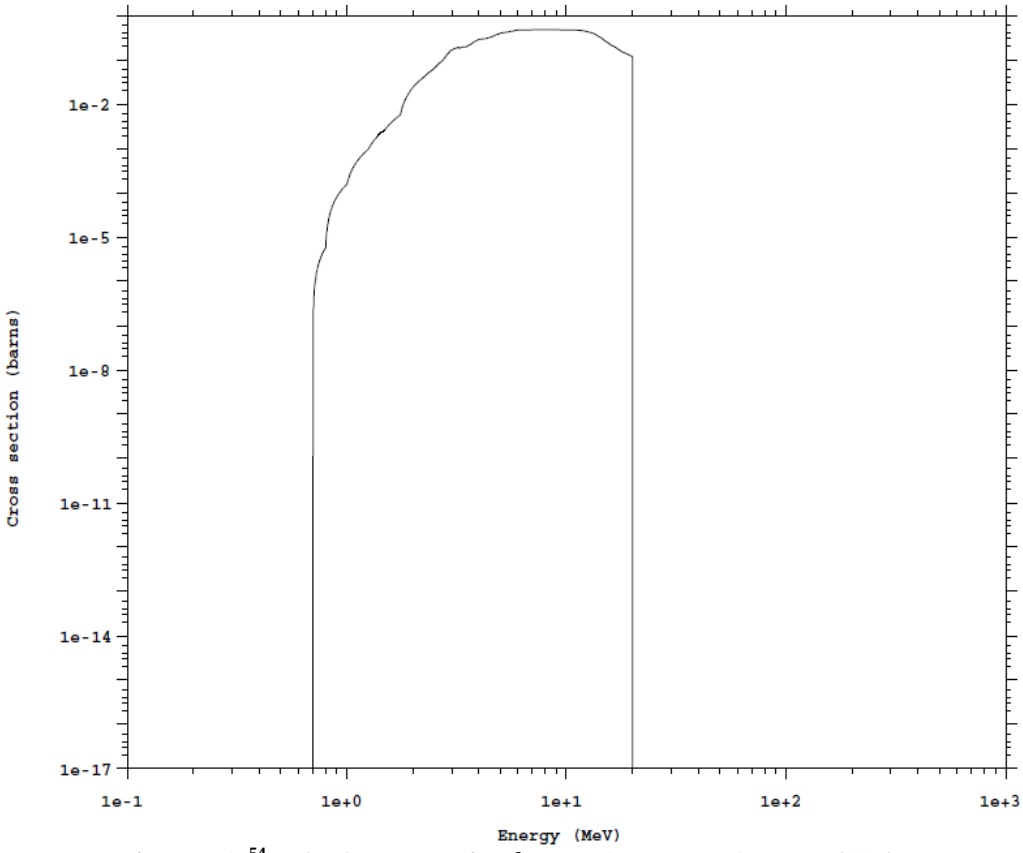

Figure 4-8. ^{54}Fe (n,p) cross section from MCNP ENDF/B-VII.1 (.80c).

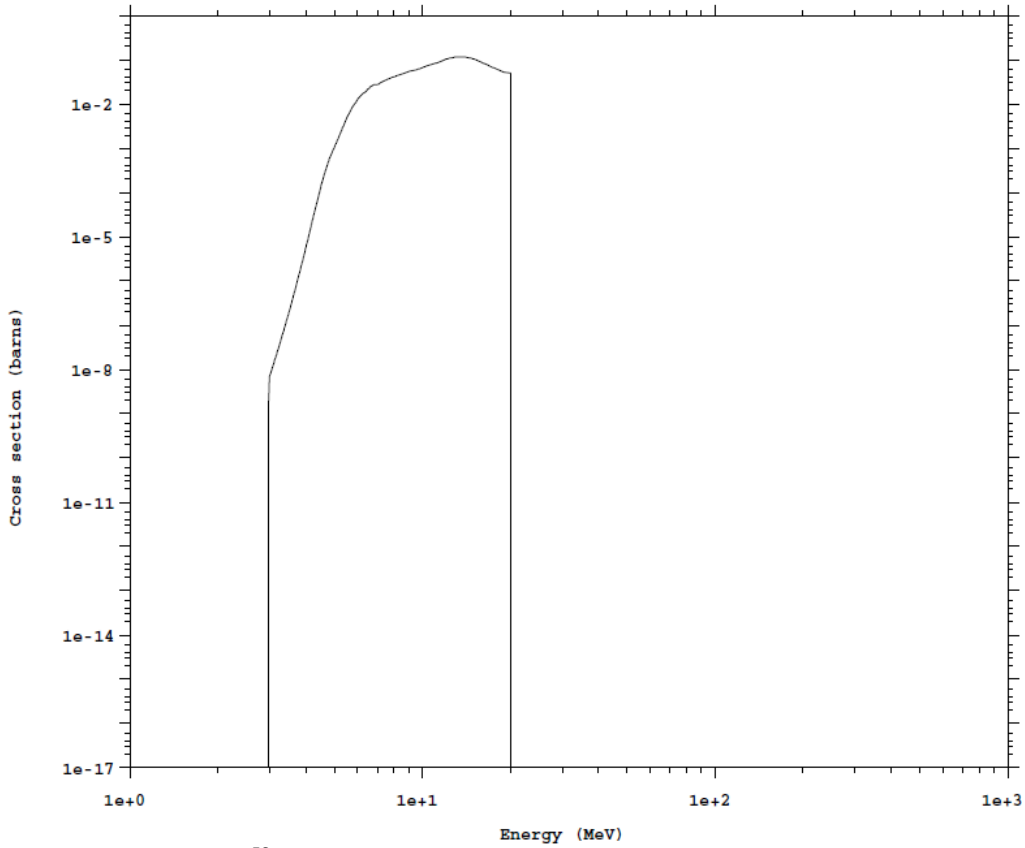

Figure 4-9. ^{56}Fe (n,p) cross section from MCNP ENDF/B-VII.1 (.80c).

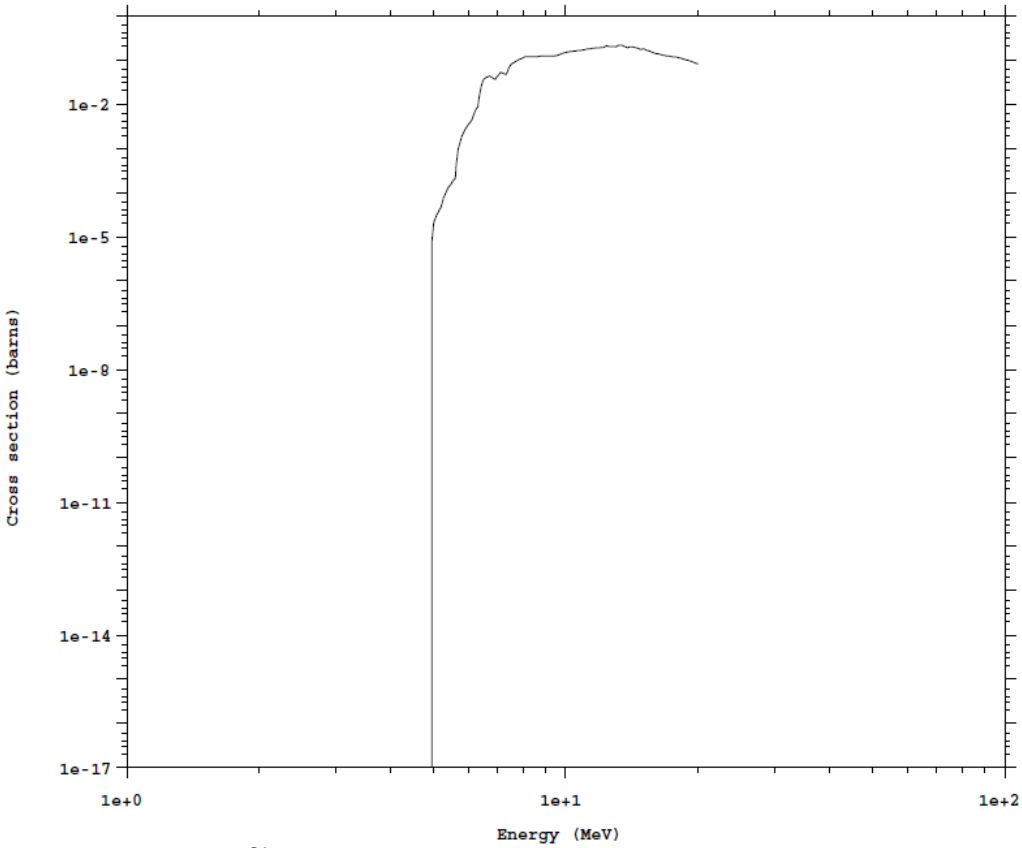

Figure 4-10. ^{24}Mg (n,p) cross section from MCNP ENDF/B-VII.1 (.80c).

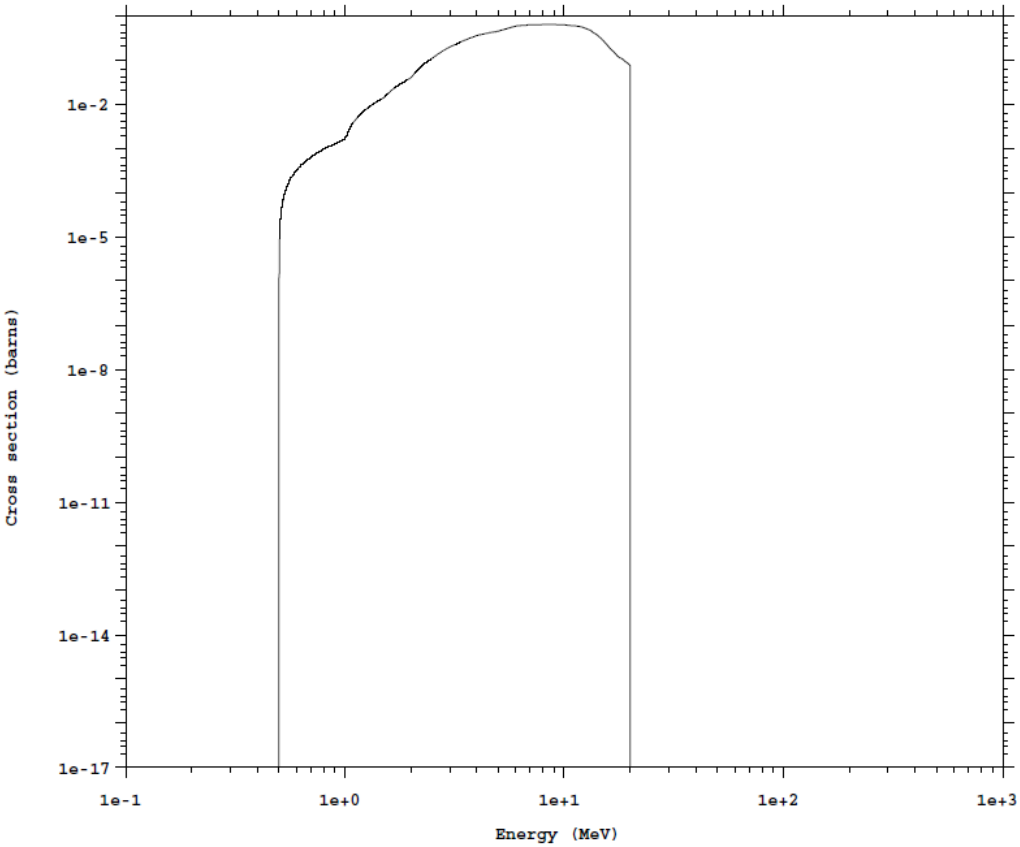

Figure 4-11. ^{58}Ni (n,p) cross section from MCNP ENDF/B-VII.1 (.80c).

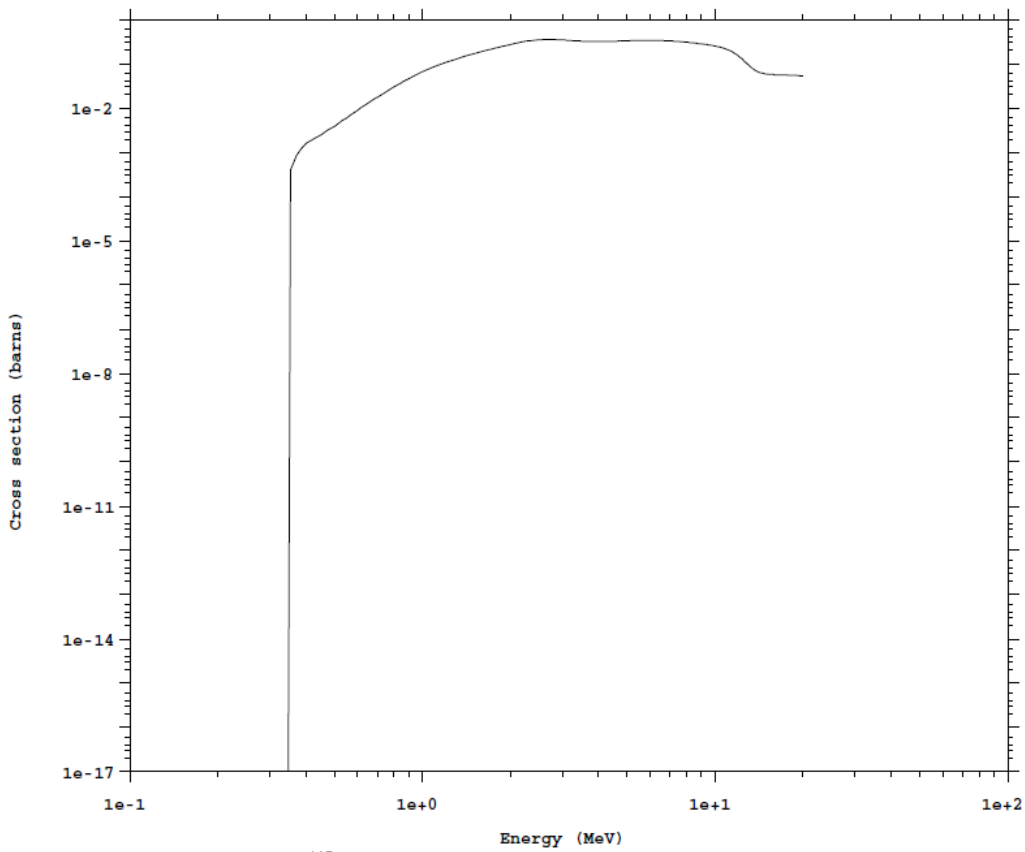

Figure 4-12. ^{115}In (n,n'γ) cross section from IRDF-2002 (.34y).

Details to calculate the complete neutron tally normalization M_n are presented in section 3.4.1.1, but the equation for this normalization factor is repeated below.

$$M_n = \frac{N_{fission}\bar{\nu}N_i\sigma_i\lambda_a e^{-\lambda_a T}}{\rho} = \frac{2.14e17 * \bar{\nu}N_i\sigma_i\lambda_a e^{-\lambda_a * 155}}{\rho}$$

Table 4-1 through Table 4-7 show a portion of the complete neutron tally normalization for each neutron activation foil in the MCNP6 model. The half-lives used to calculate the decay constants were the same as those used by the dosimetrist, which were provided in Table 1-26. The normalization factors in Table 4-1 through Table 4-7 have units of [(Bq / b × g) / (n / cm^2)], so they still need to be multiplied by the energy dependent microscopic activation cross sections. The product of the energy dependent neutron fluence, the appropriate energy dependent microscopic activation cross section, and the normalization factors in Table 4-1 through Table 4-7 provides computational results in units of Bq/g.

ALARM-TRAN-PB-SHIELD-001

Table 4-1. Case 1 collimator A complete tally normalization for neutron activation products

Foil	Reaction product	Normalization
Gold	$^{197}Au(n,\gamma)^{198}Au$	4.747E+09
Indium	$^{115}In(n,n'\gamma)^{115m}In$	1.117E+11
	$^{115}In(n,\gamma)^{116}In$	5.392E+11
Iron	$^{54}Fe(n,p)^{54}Mn$	8.418E+06
	$^{56}Fe(n,p)^{56}Mn$	3.794E+11
	$^{55}Mn(n,\gamma)^{56}Mn$	1.308E+09
Nickel	$^{58}Ni(n,p)^{58}Co$	4.113E+08
Cobalt	$^{59}Co(n,\gamma)^{60}Co$	2.221E+07
Magnesium	$^{24}Mg(n,p)^{24}Na$	1.307E+11

Table 4-2. Case 2 collimator B complete tally normalization for neutron activation products

Foil	Reaction product	Normalization
Gold	$^{197}Au(n,\gamma)^{198}Au$	4.747E+09
Indium	$^{115}In(n,n'\gamma)^{115m}In$	1.117E+11
	$^{115}In(n,\gamma)^{116}In$	5.392E+11
Iron	$^{54}Fe(n,p)^{54}Mn$	8.418E+06
	$^{56}Fe(n,p)^{56}Mn$	3.794E+11
	$^{55}Mn(n,\gamma)^{56}Mn$	1.308E+09
Nickel	$^{58}Ni(n,p)^{58}Co$	4.113E+08
Cobalt	$^{59}Co(n,\gamma)^{60}Co$	2.221E+07
Magnesium	$^{24}Mg(n,p)^{24}Na$	1.307E+11

Table 4-3. Case 3 free field complete tally normalization for neutron activation products

Foil	Reaction product	Normalization
Gold	$^{197}Au(n,\gamma)^{198}Au$	4.747E+09
Indium	$^{115}In(n,n'\gamma)^{115m}In$	1.116E+11
	$^{115}In(n,\gamma)^{116}In$	5.390E+11
Iron	$^{54}Fe(n,p)^{54}Mn$	8.418E+06
	$^{56}Fe(n,p)^{56}Mn$	3.794E+11
	$^{55}Mn(n,\gamma)^{56}Mn$	1.308E+09
Nickel	$^{58}Ni(n,p)^{58}Co$	4.113E+08
Cobalt	$^{59}Co(n,\gamma)^{60}Co$	2.220E+07
Magnesium	$^{24}Mg(n,p)^{24}Na$	1.307E+11

Table 4-4. Case 4 scattering box 1 complete tally normalization for neutron activation products

Foil	Reaction product	Normalization
Gold	$^{197}Au(n,\gamma)^{198}Au$	4.747E+09
Indium	$^{115}In(n,n'\gamma)^{115m}In$	1.116E+11
	$^{115}In(n,\gamma)^{116}In$	5.390E+11
Iron	$^{54}Fe(n,p)^{54}Mn$	8.418E+06
	$^{56}Fe(n,p)^{56}Mn$	3.794E+11
	$^{55}Mn(n,\gamma)^{56}Mn$	1.308E+09
Nickel	$^{58}Ni(n,p)^{58}Co$	4.113E+08
Cobalt	$^{59}Co(n,\gamma)^{60}Co$	2.221E+07
Magnesium	$^{24}Mg(n,p)^{24}Na$	1.306E+11

Table 4-5. Case 5 scattering box 2 complete tally normalization for neutron activation products

Foil	Reaction product	Normalization
Gold	$^{197}Au(n,\gamma)^{198}Au$	4.747E+09
Nickel	$^{58}Ni(n,p)^{58}Co$	2.221E+07
Cobalt	$^{59}Co(n,\gamma)^{60}Co$	4.113E+08

Table 4-6. Case 6 scattering box 3 complete tally normalization for neutron activation products

Foil	Reaction product	Normalization
Gold	$^{197}Au(n,\gamma)^{198}Au$	4.747E+09
Nickel	$^{58}Ni(n,p)^{58}Co$	2.221E+07
Cobalt	$^{59}Co(n,\gamma)^{60}Co$	4.113E+08

Table 4-7. Case 7 scattering box 4 complete tally

Foil	Reaction product	Normalization
Gold	$^{197}Au(n,\gamma)^{198}Au$	4.747E+09
Nickel	$^{58}Ni(n,p)^{58}Co$	2.221E+07
Cobalt	$^{59}Co(n,\gamma)^{60}Co$	4.113E+08

4.2.2 Photon TLD Dose Response Functions and Normalization – To simulate the entire process of determining the dose absorbed by a TLD, one would start with simulating the energy deposition in the TLD material, which is not an uncommon type of simulation. However, one would also have to simulate the actual process of reading the TLD, heating it to produce and count visible photons, which is not a common type of simulation but is a crucial part of measuring the dose absorbed by a TLD. Many flux-to-dose conversion factors exist that allow analysts to combine these two steps into a single calculation by calculating flux, instead of energy deposition, and converting directly to dose, skipping the simulation of reading the TLD. The response function (flux-to-dose conversion factors) selected to represent the TLD response in the MCNP6, SCALE 6.2, COG 11.1, and TRIPOLI-4 models is the ICRU-57 air kerma response. The values of this response were taken from SCALE using the 47-gamma group structure with the lowest energy group boundary changed from 10 keV to 1 keV and the highest energy group boundary changed from 20 MeV to 50 MeV. The response function is shown in Figure 4-13, and the tabulated values are listed in Appendix D.

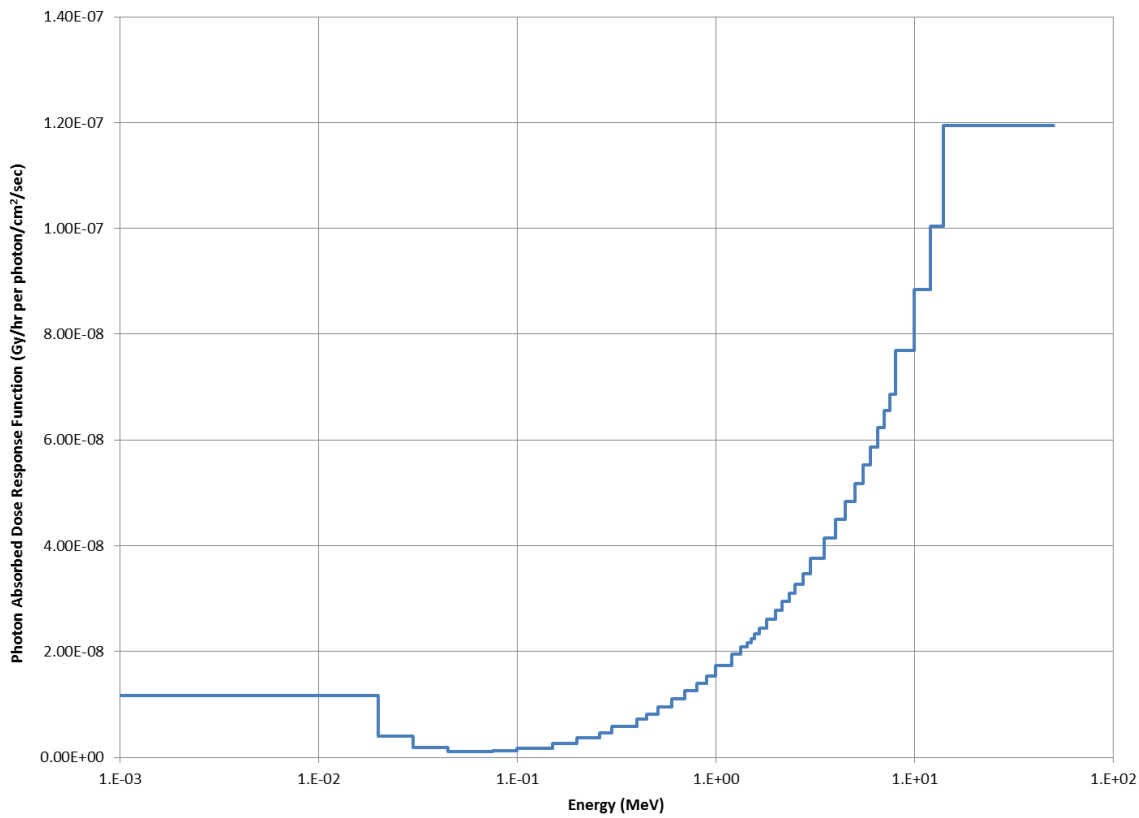

Figure 4-13. ICRU-57 air kerma response function taken from SCALE 6.2, but using modified upper and lower energy boundaries.

Details to calculate the complete photon tally normalization M_p are presented in section 3.4.1.2, but the equation for this normalization factor is repeated below.

$$M_p = \frac{N_{fission}\bar{\nu}}{F} = \frac{2.14e17 * \bar{\nu}}{F}$$

The parameter F discussed in section 3.4.1.2 is set to 3,600 because the source strength is 5.217e17 neutrons, which produces a fluence tally result instead of flux, and because the ICRU 57 response function is expecting flux. The complete photon tally normalization for each TLD in the MCNP6, SCALE 6.2, COG 11.1, and TRIPOLI-4 models that provides computational results in units of Gy is 1.449e14.

4.3 Prompt Response Simulation Results

Sample calculation results for prompt neutron and photon responses are given in Table 4-8 through Table 4-15. The results presented in Table 4-8 through Table 4-11 were calculated by the evaluators using the two-step method.

The results in Table 4-12 and Table 4-13 were calculated by the evaluators using TRIPOLI-4. The neutron results in Table 4-12 used a two-step method, so a TRIPOLI-4 eigenvalue simulation was used to create a neutron source for a fixed-source simulation of the activity in the neutron activation foils. The photon results in Table 4-13 were calculated using a one-step method. There are a few deviations from the benchmark model in these TRIPOLI simulations. First, the boron and chlorine impurities in the concrete shielding blocks have all been ignored instead of just the boron impurity. Second, the masses quoted in section 2.2.7 were used to calculate the density of the concrete shield blocks instead of using the densities reported by Soutrenon. There is also a difference between the TRIPOLI-4 simulations and the MCNP6, SCALE 6.2, and COG 11.1 simulations; the IRDF-2002 cross section library was used for all neutron activation foil response functions instead of just for the indium response functions.

The results in Table 4-14 and Table 4-15 were calculated by the internal reviewer using the one-step method with the code COG 11.1.

Graphical comparison of the simulation results to the benchmark measurement results is presented in Appendix E. Finally, note that the cross section library name referenced in the title of the tables in this section refers to the cross sections used for the transport simulation. The cross sections used for the activation reaction response functions are those discussed in section 4.2.1 and earlier in this section. It is important to point out that these neutron activation foils are thick enough that appropriate self-shield methods should be used if the cross sections in the transport simulation are multigroup cross sections.

ALARM-TRAN-PB-SHIELD-001

Table 4-8. Sample neutron activation calculation results with MCNP6 ENDF/B-VII.1 (US)

Position	Reaction	Activity (Bq/g)	Monte Carlo relative uncertainty	C/E	C/E relative uncertainty
Case 1 collimator A	$^{59}Co(n,\gamma)^{60}Co$	7.448E+01	0.0012	1.22	0.0706
	$^{197}Au(n,\gamma)^{198}Au$	8.606E+04	0.0015	1.25	0.0681
	$^{115}In(n,\gamma)^{116}In$	9.884E+06	0.0013	1.24	0.0744
	$^{115}In(n,n'\gamma)^{115m}In$	5.774E+03	0.0016	0.95	0.0633
	$^{56}Fe(n,p)^{56}Mn$ + $^{55}Mn(n,\gamma)^{56}Mn$	2.358E+03	0.0016	1.17	0.0690
	$^{24}Mg(n,p)^{24}Na$	2.953E+01	0.0067	1.19	0.0650
	$^{58}Ni(n,p)^{58}Co$	7.600E+00	0.0018	1.11	0.0636
Case 2 collimator B	$^{59}Co(n,\gamma)^{60}Co$	3.841E+01	0.0011	1.19	0.0783
	$^{197}Au(n,\gamma)^{198}Au$	3.941E+04	0.0013	1.27	0.0830
	$^{115}In(n,\gamma)^{116}In$	4.740E+06	0.0014	1.23	0.0841
	$^{115}In(n,n'\gamma)^{115m}In$	9.642E+02	0.0019	1.03	0.1074
	$^{56}Fe(n,p)^{56}Mn$ + $^{55}Mn(n,\gamma)^{56}Mn$	1.225E+03	0.0013	1.18	0.0740
	$^{24}Mg(n,p)^{24}Na$	6.450E+00	0.0079	1.17	0.1189
	$^{58}Ni(n,p)^{58}Co$	1.429E+00	0.0018	1.12	0.1118
Case 3 free field	$^{59}Co(n,\gamma)^{60}Co$	7.700E+01	0.0017	1.23	0.0702
	$^{197}Au(n,\gamma)^{198}Au$	7.865E+04	0.0027	1.22	0.0659
	$^{115}In(n,\gamma)^{116}In$	9.503E+06	0.0020	1.21	0.0711
	$^{115}In(n,n'\gamma)^{115m}In$	4.949E+03	0.0017	0.95	0.0632
	$^{56}Fe(n,p)^{56}Mn$ + $^{55}Mn(n,\gamma)^{56}Mn$	2.615E+03	0.0025	1.25	0.0644
	$^{24}Mg(n,p)^{24}Na$	2.884E+01	0.0065	1.09	0.0711
	$^{58}Ni(n,p)^{58}Co$	6.908E+00	0.0017	1.09	0.0634
Case 4 scattering box 1	$^{59}Co(n,\gamma)^{60}Co$	3.174E+01	0.0013	1.30	0.0738
	$^{197}Au(n,\gamma)^{198}Au$	3.184E+04	0.0015	1.32	0.0709
	$^{115}In(n,\gamma)^{116}In$	3.777E+06	0.0013	1.30	0.0780
	$^{115}In(n,n'\gamma)^{115m}In$	3.380E+02	0.0031	1.05	0.1051
	$^{56}Fe(n,p)^{56}Mn$ + $^{55}Mn(n,\gamma)^{56}Mn$	1.110E+03	0.0016	1.26	0.0672
	$^{24}Mg(n,p)^{24}Na$	1.344E+00	0.0073	1.11	0.1353
	$^{58}Ni(n,p)^{58}Co$	4.020E-01	0.0029	1.24	0.1315
Case 5 scattering box 2	$^{59}Co(n,\gamma)^{60}Co$	3.648E+01	0.0008	1.30	0.0732
	$^{197}Au(n,\gamma)^{198}Au$	3.488E+04	0.0011	1.35	0.0698
	$^{58}Ni(n,p)^{58}Co$	2.155E-01	0.0057	1.14	0.1127
Case 6 scattering box 3	$^{59}Co(n,\gamma)^{60}Co$	5.598E+01	0.0008	1.22	0.0719
	$^{197}Au(n,\gamma)^{198}Au$	5.572E+04	0.0011	1.28	0.0686
	$^{58}Ni(n,p)^{58}Co$	1.755E+00	0.0022	1.00	0.0716
Case 7 scattering box 4	$^{59}Co(n,\gamma)^{60}Co$	5.111E+01	0.0008	1.24	0.0727
	$^{197}Au(n,\gamma)^{198}Au$	5.040E+04	0.0011	1.29	0.0693
	$^{58}Ni(n,p)^{58}Co$	1.865E+00	0.0032	1.02	0.0724

Table 4-9. Sample TLD dose calculation results with MCNP6 ENDF/B-VII.1 (US)

Position	TLD type	Dose (Gy)	Monte Carlo relative uncertainty	C/E	C/E relative uncertainty
Case 1 collimator A	Al_2O_3	6.832E-01	0.0051	0.83	0.0811
Case 2 collimator B	Al_2O_3	4.271E-01	0.0055	0.78	0.1188
Case 3 free field	Al_2O_3	3.152E-01	0.0044	0.56	0.0786
Case 6 scattering box 3	Al_2O_3	3.149E-01	0.0037	0.75	0.0716

ALARM-TRAN-PB-SHIELD-001

Table 4-10. Sample neutron activation calculation results with SCALE 6.2 ENDF/B-VII.1 (US)

Position	Reaction	Activity (Bq/g)	Monte Carlo relative uncertainty	C/E	C/E relative uncertainty
Case 1 collimator A	$^{59}Co(n,\gamma)^{60}Co$	7.001E+01	0.0458	1.15	0.0841
	$^{197}Au(n,\gamma)^{198}Au$	8.206E+04	0.0333	1.19	0.0758
	$^{115}In(n,\gamma)^{116}In$	9.615E+06	0.0481	1.21	0.0886
	$^{115}In(n,n'\gamma)^{115m}In$	5.761E+03	0.0188	0.94	0.0661
	$^{56}Fe(n,p)^{56}Mn$ + $^{55}Mn(n,\gamma)^{56}Mn$	2.297E+03	0.0317	1.14	0.0759
	$^{24}Mg(n,p)^{24}Na$	3.367E+01	0.0229	1.36	0.0686
	$^{58}Ni(n,p)^{58}Co$	7.818E+00	0.0166	1.14	0.0657
Case 2 collimator B	$^{59}Co(n,\gamma)^{60}Co$	3.883E+01	0.0033	1.20	0.0784
	$^{197}Au(n,\gamma)^{198}Au$	3.883E+04	0.0041	1.25	0.0831
	$^{115}In(n,\gamma)^{116}In$	4.690E+06	0.0035	1.22	0.0842
	$^{115}In(n,n'\gamma)^{115m}In$	9.600E+02	0.0071	1.02	0.1076
	$^{56}Fe(n,p)^{56}Mn$ + $^{55}Mn(n,\gamma)^{56}Mn$	1.257E+03	0.0033	1.21	0.0741
	$^{24}Mg(n,p)^{24}Na$	6.949E+00	0.0151	1.26	0.1196
	$^{58}Ni(n,p)^{58}Co$	1.475E+00	0.0077	1.16	0.1120
Case 3 free field	$^{59}Co(n,\gamma)^{60}Co$	7.641E+01	0.0409	1.22	0.0812
	$^{197}Au(n,\gamma)^{198}Au$	7.825E+04	0.0507	1.22	0.0832
	$^{115}In(n,\gamma)^{116}In$	8.874E+06	0.0414	1.13	0.0822
	$^{115}In(n,n'\gamma)^{115m}In$	5.176E+03	0.0297	0.99	0.0698
	$^{56}Fe(n,p)^{56}Mn$ + $^{55}Mn(n,\gamma)^{56}Mn$	2.560E+03	0.0383	1.23	0.0749
	$^{24}Mg(n,p)^{24}Na$	3.091E+01	0.0277	1.17	0.0760
	$^{58}Ni(n,p)^{58}Co$	7.235E+00	0.0209	1.14	0.0667
Case 4 scattering box 1	$^{59}Co(n,\gamma)^{60}Co$	3.026E+01	0.0376	1.24	0.0828
	$^{197}Au(n,\gamma)^{198}Au$	2.987E+04	0.0314	1.24	0.0776
	$^{115}In(n,\gamma)^{116}In$	3.653E+06	0.0341	1.26	0.0852
	$^{115}In(n,n'\gamma)^{115m}In$	3.429E+02	0.0368	1.06	0.1113
	$^{56}Fe(n,p)^{56}Mn$ + $^{55}Mn(n,\gamma)^{56}Mn$	1.151E+03	0.0470	1.31	0.0820
	$^{24}Mg(n,p)^{24}Na$	1.451E+00	0.0143	1.20	0.1358
	$^{58}Ni(n,p)^{58}Co$	4.076E-01	0.0152	1.26	0.1323
Case 5 scattering box 2	$^{59}Co(n,\gamma)^{60}Co$	3.521E+01	0.0161	1.25	0.0749
	$^{197}Au(n,\gamma)^{198}Au$	3.285E+04	0.0163	1.27	0.0717
	$^{58}Ni(n,p)^{58}Co$	2.128E-01	0.0318	1.12	0.1170
Case 6 scattering box 3	$^{59}Co(n,\gamma)^{60}Co$	5.479E+01	0.0287	1.20	0.0774
	$^{197}Au(n,\gamma)^{198}Au$	5.436E+04	0.0309	1.24	0.0753
	$^{58}Ni(n,p)^{58}Co$	1.767E+00	0.0301	1.01	0.0776
Case 7 scattering box 4	$^{59}Co(n,\gamma)^{60}Co$	4.946E+01	0.0270	1.20	0.0776
	$^{197}Au(n,\gamma)^{198}Au$	4.889E+04	0.0357	1.25	0.0779
	$^{58}Ni(n,p)^{58}Co$	1.787E+00	0.0426	0.98	0.0839

Table 4-11. Sample TLD dose calculation results with SCALE 6.2 ENDF/B-VII.1 (US)

Position	TLD Type	Dose (Gy)	Monte Carlo relative uncertainty	C/E	C/E relative uncertainty
Case 1 collimator A	Al_2O_3	6.909E-01	0.0837	0.84	0.1164
Case 2 collimator B	Al_2O_3	4.264E-01	0.0270	0.78	0.1217
Case 3 free field	Al_2O_3	3.101E-01	0.1289	0.55	0.1509
Case 6 scattering box 3	Al_2O_3	3.178E-01	0.0885	0.76	0.1183

Table 4-12. Sample neutron activation calculation results with TRIPOLI-4 JEFF-3.1.1 (CEA-V.5.1.1, France)

Position	Reaction	Activity (Bq/g)	Monte Carlo relative uncertainty	C/E	C/E relative uncertainty
Case 1 collimator A	$^{59}Co(n,\gamma)^{60}Co$	7.84E+01	0.038	1.29	0.0801
	$^{197}Au(n,\gamma)^{198}Au$	9.08E+04	0.056	1.32	0.0882
	$^{115}In(n,\gamma)^{116}In$	9.47E+06	0.044	1.19	0.0865
	$^{115}In(n,n'\gamma)^{115m}In$	5.69E+03	0.019	0.93	0.0661
	$^{56}Fe(n,p)^{56}Mn$ + $^{55}Mn(n,\gamma)^{56}Mn$	2.33E+03	0.03	1.15	0.0752
	$^{24}Mg(n,p)^{24}Na$	2.64E+01	0.006	1.06	0.0649
	$^{58}Ni(n,p)^{58}Co$	7.51E+00	0.006	1.09	0.0638
Case 2 collimator B	$^{59}Co(n,\gamma)^{60}Co$	3.96E+01	0.04	1.23	0.0879
	$^{197}Au(n,\gamma)^{198}Au$	2.75E+04	0.023	0.89	0.0862
	$^{115}In(n,\gamma)^{116}In$	3.40E+06	0.029	0.89	0.0890
	$^{115}In(n,n'\gamma)^{115m}In$	9.84E+02	0.037	1.05	0.1135
	$^{56}Fe(n,p)^{56}Mn$ + $^{55}Mn(n,\gamma)^{56}Mn$	1.29E+03	0.041	1.24	0.0846
	$^{24}Mg(n,p)^{24}Na$	5.88E+00	0.007	1.07	0.1188
	$^{58}Ni(n,p)^{58}Co$	1.51E+00	0.006	1.19	0.1119
Case 3 free field	$^{59}Co(n,\gamma)^{60}Co$	7.91E+01	0.029	1.26	0.0759
	$^{197}Au(n,\gamma)^{198}Au$	8.47E+04	0.04	1.32	0.0771
	$^{115}In(n,\gamma)^{116}In$	1.01E+07	0.045	1.29	0.0841
	$^{115}In(n,n'\gamma)^{115m}In$	4.81E+03	0.011	0.92	0.0641
	$^{56}Fe(n,p)^{56}Mn$ + $^{55}Mn(n,\gamma)^{56}Mn$	2.58E+03	0.031	1.24	0.0714
	$^{24}Mg(n,p)^{24}Na$	2.49E+01	0.018	0.94	0.0730
	$^{58}Ni(n,p)^{58}Co$	6.76E+00	0.021	1.07	0.0667
Case 4 scattering box 1	$^{59}Co(n,\gamma)^{60}Co$	3.24E+01	0.05	1.33	0.0891
	$^{197}Au(n,\gamma)^{198}Au$	3.19E+04	0.057	1.32	0.0910
	$^{115}In(n,\gamma)^{116}In$	3.55E+06	0.025	1.22	0.0819
	$^{115}In(n,n'\gamma)^{115m}In$	3.25E+02	0.012	1.01	0.1057
	$^{56}Fe(n,p)^{56}Mn$ + $^{55}Mn(n,\gamma)^{56}Mn$	1.04E+03	0.053	1.18	0.0856
	$^{24}Mg(n,p)^{24}Na$	1.46E+00	0.055	1.21	0.1458
	$^{58}Ni(n,p)^{58}Co$	3.09E-01	0.014	0.96	0.1322
Case 5 scattering box 2	$^{59}Co(n,\gamma)^{60}Co$	3.69E+01	0.045	1.31	0.0859
	$^{197}Au(n,\gamma)^{198}Au$	3.75E+04	0.059	1.45	0.0914
	$^{58}Ni(n,p)^{58}Co$	2.25E-01	0.011	1.19	0.1131
Case 6 scattering box 3	$^{59}Co(n,\gamma)^{60}Co$	5.88E+01	0.036	1.29	0.0804
	$^{197}Au(n,\gamma)^{198}Au$	6.09E+04	0.045	1.39	0.0821
	$^{58}Ni(n,p)^{58}Co$	1.71E+00	0.03	0.98	0.0776
Case 7 scattering box 4	$^{59}Co(n,\gamma)^{60}Co$	5.28E+01	0.038	1.28	0.0821
	$^{197}Au(n,\gamma)^{198}Au$	5.15E+04	0.05	1.32	0.0854
	$^{58}Ni(n,p)^{58}Co$	1.62E+00	0.011	0.89	0.0731

Table 4-13. Sample TLD dose calculation results with TRIPOLI-4 JEFF-3.1.1 (CEA-V.5.1.1, France)

Position	TLD Type	Dose (Gy)	Monte Carlo relative uncertainty	C/E	C/E relative uncertainty
Case 1 collimator A	Al_2O_3	7.02E-01	0.023	0.86	0.0842
Case 2 collimator B	Al_2O_3	4.60E-01	0.04	0.84	0.1252
Case 3 free field	Al_2O_3	3.50E-01	0.032	0.62	0.0847
Case 6 scattering box 3	Al_2O_3	3.02E-01	0.032	0.72	0.0848

ALARM-TRAN-PB-SHIELD-001

Table 4-14. Sample neutron activation calculation results with COG 11.1 ENDF/B-VII.1 (US)

Position	Reaction	Activity (Bq/g)	Monte Carlo relative uncertainty	C/E	C/E relative uncertainty
Case 1 collimator A	$^{59}Co(n,\gamma)^{60}Co$	6.680E+01	0.0118	1.10	0.0715
	$^{197}Au(n,\gamma)^{198}Au$	7.730E+04	0.0165	1.12	0.0701
	$^{115}In(n,\gamma)^{116}In$	8.800E+06	0.0118	1.11	0.0754
	$^{115}In(n,n'\gamma)^{115m}In$	5.547E+03	0.0126	0.91	0.0646
	$^{56}Fe(n,p)^{56}Mn$ + $^{55}Mn(n,\gamma)^{56}Mn$	2.134E+03	0.0169	1.06	0.0710
	$^{24}Mg(n,p)^{24}Na$	3.060E+01	0.0872	1.23	0.1086
	$^{58}Ni(n,p)^{58}Co$	7.230E+00	0.0192	1.05	0.0664
Case 2 collimator B	$^{59}Co(n,\gamma)^{60}Co$	2.460E+01	0.0202	0.76	0.0809
	$^{197}Au(n,\gamma)^{198}Au$	2.714E+04	0.0278	0.88	0.0876
	$^{115}In(n,\gamma)^{116}In$	3.040E+06	0.0201	0.79	0.0865
	$^{115}In(n,n'\gamma)^{115m}In$	1.207E+03	0.0284	1.28	0.1110
	$^{56}Fe(n,p)^{56}Mn$ + $^{55}Mn(n,\gamma)^{56}Mn$	8.260E+02	0.0286	0.79	0.0794
	$^{24}Mg(n,p)^{24}Na$	7.000E+00	0.1851	1.27	0.2198
	$^{58}Ni(n,p)^{58}Co$	1.800E+00	0.0390	1.42	0.1184
Case 3 free field	$^{59}Co(n,\gamma)^{60}Co$	6.930E+01	0.0126	1.11	0.0713
	$^{197}Au(n,\gamma)^{198}Au$	7.430E+04	0.0165	1.16	0.0679
	$^{115}In(n,\gamma)^{116}In$	8.520E+06	0.0126	1.09	0.0722
	$^{115}In(n,n'\gamma)^{115m}In$	4.314E+03	0.0127	0.83	0.0644
	$^{56}Fe(n,p)^{56}Mn$ + $^{55}Mn(n,\gamma)^{56}Mn$	2.384E+03	0.0176	1.14	0.0667
	$^{24}Mg(n,p)^{24}Na$	3.140E+01	0.0891	1.19	0.1138
	$^{58}Ni(n,p)^{58}Co$	6.310E+00	0.0194	1.00	0.0663
Case 4 scattering box 1	$^{59}Co(n,\gamma)^{60}Co$	2.820E+01	0.0204	1.16	0.0765
	$^{197}Au(n,\gamma)^{198}Au$	2.827E+04	0.0257	1.17	0.0754
	$^{115}In(n,\gamma)^{116}In$	3.340E+06	0.0205	1.15	0.0807
	$^{115}In(n,n'\gamma)^{115m}In$	2.722E+02	0.0641	0.84	0.1231
	$^{56}Fe(n,p)^{56}Mn$ + $^{55}Mn(n,\gamma)^{56}Mn$	9.980E+02	0.0405	1.13	0.0784
	$^{24}Mg(n,p)^{24}Na$	1.030E+00	0.0424	0.85	0.1416
	$^{58}Ni(n,p)^{58}Co$	3.660E-01	0.0884	1.13	0.1584
Case 5 scattering box 2	$^{59}Co(n,\gamma)^{60}Co$	3.320E+01	0.0190	1.18	0.0756
	$^{197}Au(n,\gamma)^{198}Au$	3.200E+04	0.0233	1.24	0.0736
	$^{58}Ni(n,p)^{58}Co$	1.868E-01	0.1331	0.98	0.1743
Case 6 scattering box 3	$^{59}Co(n,\gamma)^{60}Co$	5.230E+01	0.0152	1.14	0.0735
	$^{197}Au(n,\gamma)^{198}Au$	5.090E+04	0.0190	1.16	0.0712
	$^{58}Ni(n,p)^{58}Co$	1.800E+00	0.0413	1.03	0.0826
Case 7 scattering box 4	$^{59}Co(n,\gamma)^{60}Co$	4.650E+01	0.0164	1.13	0.0746
	$^{197}Au(n,\gamma)^{198}Au$	4.810E+04	0.0207	1.23	0.0723
	$^{58}Ni(n,p)^{58}Co$	1.740E+00	0.0622	0.95	0.0954

Table 4-15. Sample TLD dose calculation results with COG 11.1 ENDF/B-VII.1 (US)

Position	TLD Type	Dose (Gy)	Monte Carlo relative uncertainty	C/E	C/E relative uncertainty
Case 1 collimator A	Al_2O_3	1.590E+00	0.0528	1.94	0.0967
Case 2 collimator B	Al_2O_3	5.300E-01	0.0822	0.96	0.1444
Case 3 free field	Al_2O_3	1.160E+00	0.0689	2.06	0.1044
Case 6 scattering box 3	Al_2O_3	7.100E-01	0.0737	1.69	0.1077

4.4 Delayed Photon Response Simulation Results

During the planning and execution of these experiments (October 2009 to October 2010), the ability to simulate delayed gammas from fission products and activated nuclei as part of a neutron transport simulation was a relatively new feature in MCNPX 2.6.0. This ability has continued to be developed and is available in MCNP6 (the ACT input keyword) and COG 11.1 (the DGLIB and DELAYEDPHOTONS input keywords in the MIX and BASIC blocks, respectively). There are some limitations to this feature in MCNP6. For example, the ACT input is not available for eigenvalue simulations, and for fixed-source simulations, the ACT card does not produce any delayed gammas from fission products if the NONU card is used. An MCNP6 fixed-source simulation of this experiment requires the NONU card because the geometry is critical. COG 11.1 has only tested this feature with eigenvalue simulations and only delayed fission photons are produced, i.e., no activation photons. One has always been able to perform this type of calculation with any coupled neutron/photon radiation transport code using a two-step method (different from the 2-step method discussed previously in this section), which is required for SCALE 6.2 or TRIPOLI-4 to perform this type of analysis. First, the neutron flux in a material must be calculated, and that flux must be used to generate a delayed gamma source. This source can be generated for any transport code using ORIGEN, which is part of SCALE 6.2, or any other similar code. That delayed gamma source must then be used in a second simulation that calculates the desired response due to the delayed fission gammas and/or activation gammas. The experimenters and evaluators of this benchmark originally determined that any delayed gammas produced during this experiment would make a negligible contribution to the absorbed dose measured by the TLDs, when compared to the prompt fission gammas, capture gammas, and gammas produced by neutron inelastic scattering. Therefore, records have not been sought for the rate at which the fuel solution drained from SILENE nor the time when all the fuel solution was removed from the system (these data are likely available or could be calculated for a gravity driven system). Furthermore, no exact time was recorded for when the TLDs were removed from the SILENE room. Without this timing information, it is difficult to accurately predict the impact of any activation gammas on the absorbed doses measured by the TLDs.

In ALARM-TRAN-AIR-SHIELD-001 the contribution to the TLD doses was estimated using ORIGEN / MCNP6 and COG. The finding was that including the delayed fission product gamma contributions in the calculated TLD doses increased the calculated doses between 10 and 20 percent in the unshielded TLDs. COG was used to perform a similar evaluation for this experiment, but it was found that including delayed fission product gammas in these simulations made no contribution to the calculated dose. Considering that all the delayed fission product gammas are born inside the lead shield surrounding SILENE and that the TLD doses are likely dominated by neutron induced gammas born outside the lead shield, this finding is not surprising.

5.0 REFERENCES

1. J. Piot, "2010 CAAS Test on the SILENE Reactor, Data for CAAS Experiment Modeling," CEA/VA/DRMN/SRNC, Valduc, 2011.

2. X. Jacquet, G. Rousseau, and L. Savanier, "Rapport d'Essais – Dossier d'Experience No 2011/015.a," CEA/VA/DRMN/SRNC, Valduc, 2011.

APPENDIX A: TYPICAL INPUT LISTINGS

A.1 MCNP6 Input Listings – Two-Step Method (US)

In order to use the IRDF-2002 cross sections, they must be downloaded from the IAEA at https://www-nds.iaea.org/irdf2002/index.htmlx. The cross sections should be downloaded in ACE format in order to use them with MCNP6. The MCNP6 input files presented in this appendix expect the IRDF-2002 cross sections to be in the same directory as the input file and to be named irdf-2002.

A.1.1 MCNP6 Eigenvalue Input – The first step of the two-step method is to run an eigenvalue calculation that tallies the spatial and energy dependent distribution of fission neutrons. The MCNP6 input for this simulation is mcnp\source\fineMesh\pulse2. This input contains a cylindrical mesh tally to calculate the spatial distribution of fission neutrons. The results of the mesh tally used in the next step are based on 120,000 histories per batch, 19,070 total batches, and 30 skipped batches.

Also included is an MCNP6 input with a PTRAC card, mcnp\source\chi.1000\pulse2, which was used to write the starting energy of all source neutrons. The energies of the source particles saved in the PTRAC file were used to create the energy distribution of fission neutrons. This input uses 5,000 histories per batch, 9,550 total batches, and 30 skipped batches. However, data begin to be written to the PTRAC file after the second batch. Since MCNP cannot run in parallel when writing a PTRAC file, 400 instances of this simulation were run, each using a unique starting random number seed and stride. Therefore, the final analysis of the PTRAC data included 3,819,200 batches of 5,000 particles each.

A.1.2 MCNP6 Fixed-Source Input – The second step of the two-step method is to run a fixed-source calculation that tallies all detector responses. In this case the detector responses are neutron activation of foils and absorbed dose deposited in TLDs. The tally of fission neutrons from the first step is converted to a source for the second step. Weight windows were generated for the second step MCNP6 simulations using the ADVANTG[a] code. The weight window input files (wwinp) are included, and can be used directly in order to skip repeating the ADVANTG calculations. The inputs for the ADVANTG calculations are included in Appendix B. In order to make the MCNP6 simulations more efficient, a separate MCNP6 simulation for collimator A, collimator B, the free field location, and each of the four positions within the scattering box was run. Each MCNP6 simulation had its one set of weight windows and biased source, and therefore its own ADVANTG input. Links to the MCNP6 input files and weight window files are listed below in Table A-1. In each MCNP6 fixed-source simulation 400,000,000 histories were simulated.

[a] S.W. Mosher et al., "ADVANTG--An Automated Variance Reduction Parameter Generator," ORNL/TM-2013/416 Rev. 1, Oak Ridge National Laboratory, 2015.

Table A-1. Links to MCNP6 input and weight window files

Location	MCNP6 input	MCNP6 weight windows
Case 1 collimator A	mcnp\ca\pulse2ww.inp	mcnp\ca\pulse2ww.wwinp
Case 2 collimator B	mcnp\cb\pulse2ww.inp	mcnp\cb\pulse2ww.wwinp
Case 3 free field	mcnp\ff\pulse2ww.inp	mcnp\ff\pulse2ww.wwinp
Case 4 scattering box 1	mcnp\sb1\pulse2ww.inp	mcnp\sb1\pulse2ww.wwinp
Case 5 scattering box 2	mcnp\sb2\pulse2ww.inp	mcnp\sb2\pulse2ww.wwinp
Case 6 scattering box 3	mcnp\sb3\pulse2ww.inp	mcnp\sb3\pulse2ww.wwinp
Case 7 scattering box 4	mcnp\sb4\pulse2ww.inp	mcnp\sb4\pulse2ww.wwinp

A.2 SCALE 6.2 Input Listings – Two-Step Method (US)

A.2.1 SCALE 6.2 Eigenvalue Input – The first step of the two-step method is to run an eigenvalue calculation that tallies the spatial and energy dependent distribution of fission neutrons. The CSAS6/Keno-VI eigenvalue input is scale\cekeno\pulse2_endf71_293k.inp. This input contains a Cartesian mesh tally to calculate the spatial and energy distribution of fission neutrons. The results of the mesh tally used in the next step are based on 50,000 histories per batch, 60,200 total batches, and 200 skipped batches.

A.2.2 SCALE 6.2 Fixed-Source Input – The second step of the two-step method is to run a fixed-source calculation that tallies all detector responses. In this case the detector responses are neutron activation of foils and absorbed dose deposited in TLDs. The tally of fission neutrons from the first step is converted to a source for the second step. Weight windows and a biased source are automatically generated as part of the MAVRIC sequence. In order to make the MAVRIC/Monaco simulations more efficient, a separate MAVRIC/Monaco simulation for collimator A, collimator B, the free field location, and each of the four positions within the scattering box was run. Each MAVRIC/Monaco simulation had its own set of weight windows and biased source. Links to the SCALE 6.2 MAVRIC/Monaco input files are listed below in Table A-2. Each of the MAVRIC/Monaco inputs simulates 20 batches with 25,000,000 histories per batch. However, 20 copies of each input file was created and run with a different random number seed, so each SCALE 6.2 fixed source simulation ran a total of 10,000,000,000 histories.

Table A-2. Links to SCALE 6.2 input and weight window files

Location	MAVRIC/Monaco input
Case 1 collimator A	scale\cemonaco\ca\pulse2_endf71_293k.inp
Case 2 collimator B	scale\cemonaco\cb\pulse2_endf71_293k.inp
Case 3 free field	scale\cemonaco\ff\pulse2_endf71_293k.inp
Case 4 scattering box 1	scale\cemonaco\sb1\pulse2_endf71_293k.inp
Case 5 scattering box 2	scale\cemonaco\sb2\pulse2_endf71_293k.inp
Case 6 scattering box 3	scale\cemonaco\sb3\pulse2_endf71_293k.inp
Case 7 scattering box 4	scale\cemonaco\sb4\pulse2_endf71_293k.inp

A.3 TRIPOLI-4 Input Listings – One-Step and Two-step Methods (France)

The activity produced in the neutron activation foils was simulated by TRIPOLI-4 using a two-step method. The dose absorbed by the TLDs was simulated by TRIPOLI-4 using a one-step method. A single TRIPOLI-4 input, tripoli\p2-icsbep, with the full geometry and all tallies (all cases), which can be modified to simulate the one-step or two-step methods, is available.

A.4 COG 11.1 Input Listings – One-Step Method (US)

The COG 11.1 simulations were performed using the one-step method, i.e., a single eigenvalue calculation with detector response tallies. This method avoids the need to create a source for a fixed-source simulation and the approximations introduced by discretizing the source. However, this method requires more CPU time because some variance reduction techniques cannot be used. The file cog\COG-SILENE-INPUT2 contains the COG 11.1 input with all the required tallies (all cases). The COG 11.1 eigenvalue simulation ran 2,000 particles per batch, 9,000,000 batches, and skipped 100 initial batches.

APPENDIX B: ADVANTG INPUT LISTINGS

B.1 ADVANTG Input Listings

ADVANTG is used to generate mesh-based weight windows and biased source parameters for MCNP simulations. ADVANTG has a simple input file that identifies the method to be used to generate weight windows and biased sources, provides a mesh for the discrete ordinates calculations and other parameters needed by the discrete ordinates calculation, and identifies the name of the MCNP input and what tallies the generated weight windows and the biased source should optimize. Links to the ADVANTG input files are listed in Table B-1. Also listed in Table B-1 are the MCNP5 input files ADVANTG used. These are necessary because ADVANTG does read MCNP6 input, so ADVANTG does not recognize new MCNP6 keywords. Depending on the xsdir file, ADVANTG may not recognize new cross sections distributed with MCNP6.

Table B-1. Links to ADVANTG and MCNP5 input files

Location	ADVANTG input	MCNP5 input for ADVANTG
Case 1 collimator A	mcnp\ca\advantg2.in	mcnp\ca\pulse2.adv
Case 2 collimator B	mcnp\cb\advantg2.in	mcnp\cb\pulse2.adv
Case 3 free field	mcnp\ff\advantg2.in	mcnp\ff\pulse2.adv
Case 4 scattering box 1	mcnp\sb1\advantg2.in	mcnp\sb1\pulse2.adv
Case 5 scattering box 2	mcnp\sb2\advantg2.in	mcnp\sb2\pulse2.adv
Case 6 scattering box 3	mcnp\sb3\advantg2.in	mcnp\sb3\pulse2.adv
Case 7 scattering box 4	mcnp\sb4\advantg2.in	mcnp\sb4\pulse2.adv

APPENDIX C: SOURCE DISTRIBUTIONS

C.1 Source

Below are tables of the source distributions plotted in Section 4.1. These distributions were created during the MCNP eigenvalue simulation (first step) of the two-step method. The tallies from the eigenvalue calculation have been made into probability distribution functions for the plots in Section 4.1 and the tables in this appendix. Also included in this appendix are the relative errors from the tallies, which illustrate how much uncertainty was present in the tallies that were converted to a fixed source.

Below in Table C-1 is the energy distribution of fission neutrons plotted in Figure 4-1. As mentioned in Appendix A, this distribution was created by post processing MCNP PTRAC data from an eigenvalue simulation of the benchmark. After the second batch of this eigenvalue simulation was completed, the energy of each subsequent source neutron was written to the PTRAC file. All of these energies were collected in post processing and the distribution in Table C-1 was created. Note two results of this method. First, only the energy was considered. Position was ignored, so the energy dependence of the source neutrons has been decoupled from the position of source neutrons. It has been assumed the energy and spatial dependence of the source are separable. Second, the energy distribution has been discretized, but it contains contributions from all fissionable isotopes in the fuel solution in the correct proportions.

Table C-1. Energy distribution of fission neutrons (cont)

Group upper energy (MeV)	Group probability	Rel. error	Group upper energy (MeV)	Group probability	Rel. error	Group upper energy (MeV)	Group probability	Rel. error
5.0435E-06 (minimum energy)								
5.3300E-06	1.7671E-09	0.1741	8.0100E-02	1.0110E-04	0.0007	1.6699E+00	4.7500E-03	0.0001
5.6165E-06	1.7136E-09	0.1768	8.0701E-02	1.0171E-04	0.0007	1.6869E+00	4.7465E-03	0.0001
5.9030E-06	1.1245E-09	0.2182	8.1301E-02	1.0182E-04	0.0007	1.7038E+00	4.6887E-03	0.0001
6.1895E-06	1.4458E-09	0.1925	8.1902E-02	1.0236E-04	0.0007	1.7208E+00	4.6847E-03	0.0001
6.4760E-06	1.4458E-09	0.1925	8.2503E-02	1.0259E-04	0.0007	1.7377E+00	4.6267E-03	0.0001
6.8439E-06	2.0349E-09	0.1622	8.3306E-02	1.3779E-04	0.0006	1.7555E+00	4.8386E-03	0.0001
7.2117E-06	1.6065E-09	0.1826	8.4109E-02	1.3826E-04	0.0006	1.7733E+00	4.8037E-03	0.0001
7.5796E-06	1.7671E-09	0.1741	8.4911E-02	1.3875E-04	0.0006	1.7912E+00	4.7970E-03	0.0001
7.9474E-06	1.9278E-09	0.1667	8.5714E-02	1.3935E-04	0.0006	1.8090E+00	4.7351E-03	0.0001
8.3153E-06	2.0349E-09	0.1622	8.6517E-02	1.3995E-04	0.0006	1.8268E+00	4.7003E-03	0.0001
8.7876E-06	2.1420E-09	0.1581	8.8821E-02	4.0510E-04	0.0004	1.8455E+00	4.9000E-03	0.0001
9.2600E-06	1.8207E-09	0.1715	9.1125E-02	4.0998E-04	0.0004	1.8643E+00	4.8869E-03	0.0001
9.7323E-06	2.8381E-09	0.1374	9.3429E-02	4.1505E-04	0.0004	1.8830E+00	4.8226E-03	0.0001
1.0205E-05	2.5704E-09	0.1443	9.5733E-02	4.1952E-04	0.0004	1.9018E+00	4.8086E-03	0.0001
1.0677E-05	3.1594E-09	0.1302	9.8037E-02	4.2422E-04	0.0004	1.9205E+00	4.7458E-03	0.0001
1.1284E-05	3.6949E-09	0.1204	1.0065E-01	4.8745E-04	0.0003	1.9402E+00	4.9566E-03	0.0001
1.1890E-05	3.7485E-09	0.1195	1.0326E-01	4.9121E-04	0.0003	1.9599E+00	4.9129E-03	0.0001
1.2497E-05	3.0523E-09	0.1325	1.0587E-01	4.9659E-04	0.0003	1.9796E+00	4.8702E-03	0.0001
1.3103E-05	3.2130E-09	0.1291	1.0848E-01	5.0222E-04	0.0003	1.9993E+00	4.8257E-03	0.0001
1.3710E-05	3.3736E-09	0.1260	1.1109E-01	5.0778E-04	0.0003	2.0190E+00	4.7809E-03	0.0001
1.4489E-05	5.1408E-09	0.1021	1.1223E-01	2.2379E-04	0.0005	2.0397E+00	4.9771E-03	0.0001
1.5268E-05	5.0872E-09	0.1026	1.1337E-01	2.2464E-04	0.0005	2.0604E+00	4.9295E-03	0.0001
1.6046E-05	4.5517E-09	0.1085	1.1451E-01	2.2581E-04	0.0005	2.0811E+00	4.8799E-03	0.0001
1.6825E-05	5.0337E-09	0.1031	1.1565E-01	2.2692E-04	0.0005	2.1018E+00	4.8325E-03	0.0001
1.7604E-05	4.3911E-09	0.1104	1.1679E-01	2.2792E-04	0.0005	2.1225E+00	4.7842E-03	0.0001
1.8604E-05	6.3189E-09	0.0921	1.1799E-01	2.4065E-04	0.0005	2.1443E+00	4.9870E-03	0.0001

Table C-1. Energy distribution of fission neutrons (cont)

Group upper energy (MeV)	Group probability	Rel. error	Group upper energy (MeV)	Group probability	Rel. error	Group upper energy (MeV)	Group probability	Rel. error
1.9604E-05	6.2118E-09	0.0928	1.1918E-01	2.3982E-04	0.0005	2.1660E+00	4.9107E-03	0.0001
2.0603E-05	6.8544E-09	0.0884	1.2038E-01	2.4308E-04	0.0005	2.1878E+00	4.8800E-03	0.0001
2.1603E-05	6.7473E-09	0.0891	1.2157E-01	2.4249E-04	0.0005	2.2095E+00	4.8046E-03	0.0001
2.2603E-05	6.6937E-09	0.0894	1.2277E-01	2.4558E-04	0.0005	2.2313E+00	4.7739E-03	0.0001
2.3887E-05	7.1757E-09	0.0864	1.2403E-01	2.5887E-04	0.0005	2.2464E+00	3.2767E-03	0.0001
2.5171E-05	8.1931E-09	0.0808	1.2529E-01	2.6018E-04	0.0005	2.2615E+00	3.2515E-03	0.0001
2.6455E-05	8.0325E-09	0.0816	1.2655E-01	2.6138E-04	0.0005	2.2767E+00	3.2472E-03	0.0001
2.7739E-05	9.5854E-09	0.0747	1.2781E-01	2.6220E-04	0.0005	2.2918E+00	3.2009E-03	0.0001
2.9023E-05	8.9964E-09	0.0772	1.2907E-01	2.6353E-04	0.0005	2.3069E+00	3.1750E-03	0.0001
3.0672E-05	1.3013E-08	0.0642	1.3039E-01	2.7734E-04	0.0004	2.3147E+00	1.6303E-03	0.0002
3.2320E-05	1.0817E-08	0.0704	1.3172E-01	2.8072E-04	0.0004	2.3224E+00	1.6028E-03	0.0002
3.3969E-05	1.2477E-08	0.0655	1.3304E-01	2.7966E-04	0.0004	2.3302E+00	1.6177E-03	0.0002
3.5617E-05	1.0817E-08	0.0704	1.3437E-01	2.8313E-04	0.0004	2.3379E+00	1.5899E-03	0.0002
3.7266E-05	1.1299E-08	0.0688	1.3569E-01	2.8218E-04	0.0004	2.3457E+00	1.6046E-03	0.0002
3.9383E-05	1.7297E-08	0.0556	1.3708E-01	2.9834E-04	0.0004	2.3496E+00	7.9944E-04	0.0003
4.1500E-05	1.6065E-08	0.0577	1.3847E-01	2.9975E-04	0.0004	2.3535E+00	7.9771E-04	0.0003
4.3617E-05	1.4833E-08	0.0601	1.3986E-01	3.0099E-04	0.0004	2.3575E+00	8.1654E-04	0.0003
4.5734E-05	1.4458E-08	0.0609	1.4125E-01	3.0191E-04	0.0004	2.3614E+00	7.9477E-04	0.0003
4.7851E-05	1.7832E-08	0.0548	1.4264E-01	3.0324E-04	0.0004	2.3653E+00	7.9262E-04	0.0003
5.0569E-05	2.3080E-08	0.0482	1.4410E-01	3.1996E-04	0.0004	2.3693E+00	8.1110E-04	0.0003
5.3287E-05	2.1955E-08	0.0494	1.4557E-01	3.2354E-04	0.0004	2.3733E+00	8.0969E-04	0.0003
5.6006E-05	2.2598E-08	0.0487	1.4703E-01	3.2280E-04	0.0004	2.3772E+00	7.8794E-04	0.0003
5.8724E-05	2.3294E-08	0.0479	1.4850E-01	3.2640E-04	0.0004	2.3812E+00	8.0650E-04	0.0003
6.1442E-05	2.2384E-08	0.0489	1.4996E-01	3.2552E-04	0.0004	2.3852E+00	8.0459E-04	0.0003
6.4932E-05	3.0684E-08	0.0418	1.5150E-01	3.4504E-04	0.0004	2.4014E+00	3.2407E-03	0.0001
6.8422E-05	2.9345E-08	0.0427	1.5303E-01	3.4389E-04	0.0004	2.4175E+00	3.1930E-03	0.0001
7.1913E-05	2.8328E-08	0.0435	1.5457E-01	3.4784E-04	0.0004	2.4337E+00	3.1841E-03	0.0001
7.5403E-05	3.2612E-08	0.0405	1.5610E-01	3.4696E-04	0.0004	2.4498E+00	3.1381E-03	0.0001
7.8893E-05	3.1541E-08	0.0412	1.5764E-01	3.5086E-04	0.0004	2.4660E+00	3.1295E-03	0.0001
8.3374E-05	4.0698E-08	0.0363	1.5926E-01	3.7097E-04	0.0004	2.4913E+00	4.8303E-03	0.0001
8.7856E-05	3.9573E-08	0.0368	1.6088E-01	3.7232E-04	0.0004	2.5166E+00	4.7627E-03	0.0001
9.2337E-05	4.1180E-08	0.0361	1.6249E-01	3.7168E-04	0.0004	2.5418E+00	4.6776E-03	0.0001
9.6819E-05	4.0162E-08	0.0365	1.6411E-01	3.7556E-04	0.0004	2.5671E+00	4.6317E-03	0.0001
1.0130E-04	4.3750E-08	0.0350	1.6573E-01	3.7697E-04	0.0004	2.5924E+00	4.5648E-03	0.0001
1.0705E-04	5.3175E-08	0.0317	1.6743E-01	3.9741E-04	0.0004	2.6190E+00	4.7288E-03	0.0001
1.1281E-04	5.6763E-08	0.0307	1.6913E-01	3.9931E-04	0.0004	2.6456E+00	4.6584E-03	0.0001
1.1856E-04	5.6227E-08	0.0309	1.7082E-01	3.9849E-04	0.0004	2.6721E+00	4.5700E-03	0.0001
1.2432E-04	5.9601E-08	0.0300	1.7252E-01	4.0246E-04	0.0004	2.6987E+00	4.5174E-03	0.0001
1.3007E-04	5.6763E-08	0.0307	1.7422E-01	4.0390E-04	0.0004	2.7253E+00	4.4476E-03	0.0001
1.3746E-04	7.5398E-08	0.0267	1.7601E-01	4.2724E-04	0.0004	2.7533E+00	4.6092E-03	0.0001
1.4485E-04	7.9200E-08	0.0260	1.7780E-01	4.2895E-04	0.0004	2.7812E+00	4.5168E-03	0.0001
1.5224E-04	7.9040E-08	0.0260	1.7958E-01	4.2844E-04	0.0004	2.8092E+00	4.4582E-03	0.0001
1.5963E-04	8.1128E-08	0.0257	1.8137E-01	4.3254E-04	0.0004	2.8371E+00	4.3702E-03	0.0001
1.6702E-04	8.0271E-08	0.0258	1.8316E-01	4.3421E-04	0.0004	2.8651E+00	4.3141E-03	0.0001
1.7651E-04	1.1047E-07	0.0220	1.8504E-01	4.5786E-04	0.0003	2.8945E+00	4.4516E-03	0.0001
1.8599E-04	1.1160E-07	0.0219	1.8692E-01	4.5969E-04	0.0003	2.9238E+00	4.3588E-03	0.0001
1.9548E-04	1.0667E-07	0.0224	1.8879E-01	4.5905E-04	0.0003	2.9532E+00	4.2980E-03	0.0001
2.0496E-04	1.1369E-07	0.0217	1.9067E-01	4.6326E-04	0.0003	2.9825E+00	4.2070E-03	0.0001
2.1445E-04	1.1417E-07	0.0217	1.9255E-01	4.6450E-04	0.0003	3.0119E+00	4.1463E-03	0.0001
2.2663E-04	1.6044E-07	0.0183	1.9452E-01	4.8852E-04	0.0003	3.0428E+00	4.2786E-03	0.0001
2.3881E-04	1.5481E-07	0.0186	1.9650E-01	4.9306E-04	0.0003	3.0737E+00	4.1981E-03	0.0001

Table C-1. Energy distribution of fission neutrons (cont)

Group upper energy (MeV)	Group probability	Rel. error	Group upper energy (MeV)	Group probability	Rel. error	Group upper energy (MeV)	Group probability	Rel. error
2.5100E-04	1.5144E-07	0.0188	1.9847E-01	4.9220E-04	0.0003	3.1046E+00	4.1183E-03	0.0001
2.6318E-04	1.6252E-07	0.0182	2.0045E-01	4.9688E-04	0.0003	3.1355E+00	4.0419E-03	0.0001
2.7536E-04	1.6445E-07	0.0180	2.0242E-01	4.9651E-04	0.0003	3.1664E+00	3.9655E-03	0.0001
2.9100E-04	2.0938E-07	0.0160	2.0450E-01	5.2677E-04	0.0003	3.1989E+00	4.0887E-03	0.0001
3.0664E-04	2.1597E-07	0.0157	2.0657E-01	5.2605E-04	0.0003	3.2313E+00	3.9944E-03	0.0001
3.2229E-04	2.2721E-07	0.0154	2.0865E-01	5.3106E-04	0.0003	3.2638E+00	3.9276E-03	0.0001
3.3793E-04	2.2694E-07	0.0154	2.1072E-01	5.3090E-04	0.0003	3.2962E+00	3.8353E-03	0.0001
3.5357E-04	2.2823E-07	0.0153	2.1280E-01	5.3583E-04	0.0003	3.3287E+00	3.7693E-03	0.0001
3.7366E-04	3.0786E-07	0.0132	2.1498E-01	5.6365E-04	0.0003	3.3987E+00	7.8612E-03	0.0001
3.9374E-04	3.0058E-07	0.0133	2.1716E-01	5.6624E-04	0.0003	3.4687E+00	7.5205E-03	0.0001
4.1383E-04	3.0866E-07	0.0132	2.1935E-01	5.7122E-04	0.0003	3.5388E+00	7.2050E-03	0.0001
4.3391E-04	3.1321E-07	0.0131	2.2153E-01	5.7066E-04	0.0003	3.6088E+00	6.8799E-03	0.0001
4.5400E-04	3.1744E-07	0.0130	2.2371E-01	5.7297E-04	0.0003	3.6788E+00	6.5772E-03	0.0001
4.7979E-04	4.1624E-07	0.0113	2.2600E-01	6.0465E-04	0.0003	3.7562E+00	6.9356E-03	0.0001
5.0558E-04	4.4061E-07	0.0110	2.2830E-01	6.0982E-04	0.0003	3.8336E+00	6.5973E-03	0.0001
5.3137E-04	4.3177E-07	0.0111	2.3059E-01	6.0943E-04	0.0003	3.9109E+00	6.2671E-03	0.0001
5.5716E-04	4.5255E-07	0.0109	2.3289E-01	6.1441E-04	0.0003	3.9883E+00	5.9680E-03	0.0001
5.8295E-04	4.4784E-07	0.0109	2.3518E-01	6.1436E-04	0.0003	4.0657E+00	5.6764E-03	0.0001
6.1606E-04	5.9671E-07	0.0095	2.3759E-01	6.4908E-04	0.0003	4.1512E+00	5.9442E-03	0.0001
6.4918E-04	5.9719E-07	0.0095	2.4000E-01	6.5111E-04	0.0003	4.2367E+00	5.6193E-03	0.0001
6.8229E-04	6.1989E-07	0.0093	2.4242E-01	6.5756E-04	0.0003	4.3223E+00	5.3195E-03	0.0001
7.1541E-04	6.2862E-07	0.0092	2.4483E-01	6.5711E-04	0.0003	4.4078E+00	5.0228E-03	0.0001
7.4852E-04	6.3874E-07	0.0092	2.4724E-01	6.5943E-04	0.0003	4.4933E+00	4.7483E-03	0.0001
7.9104E-04	8.3848E-07	0.0080	2.5244E-01	1.4323E-03	0.0002	4.5394E+00	2.4509E-03	0.0001
8.3356E-04	8.5974E-07	0.0079	2.5764E-01	1.4436E-03	0.0002	4.5855E+00	2.3776E-03	0.0001
8.7608E-04	8.8095E-07	0.0078	2.6284E-01	1.4548E-03	0.0002	4.6315E+00	2.3006E-03	0.0002
9.1860E-04	8.8181E-07	0.0078	2.6804E-01	1.4658E-03	0.0002	4.6776E+00	2.2368E-03	0.0002
9.6112E-04	9.1040E-07	0.0077	2.7324E-01	1.4760E-03	0.0002	4.7237E+00	2.1683E-03	0.0002
1.0157E-03	1.2002E-06	0.0067	2.7604E-01	7.9878E-04	0.0003	4.7721E+00	2.2060E-03	0.0002
1.0703E-03	1.2225E-06	0.0066	2.7884E-01	8.0201E-04	0.0003	4.8206E+00	2.1407E-03	0.0002
1.1249E-03	1.2565E-06	0.0065	2.8165E-01	8.0699E-04	0.0003	4.8690E+00	2.0687E-03	0.0002
1.1795E-03	1.2802E-06	0.0065	2.8445E-01	8.0625E-04	0.0003	4.9175E+00	2.0056E-03	0.0002
1.2341E-03	1.2964E-06	0.0064	2.8725E-01	8.0914E-04	0.0003	4.9659E+00	1.9382E-03	0.0002
1.3042E-03	1.7229E-06	0.0056	2.8870E-01	4.2008E-04	0.0004	5.0168E+00	1.9709E-03	0.0002
1.3743E-03	1.7629E-06	0.0055	2.9016E-01	4.2371E-04	0.0004	5.0677E+00	1.9058E-03	0.0002
1.4444E-03	1.7926E-06	0.0055	2.9161E-01	4.2127E-04	0.0004	5.1187E+00	1.8447E-03	0.0002
1.5145E-03	1.8292E-06	0.0054	2.9307E-01	4.2469E-04	0.0004	5.1696E+00	1.7789E-03	0.0002
1.5846E-03	1.8499E-06	0.0054	2.9452E-01	4.2271E-04	0.0004	5.2205E+00	1.7181E-03	0.0002
1.6746E-03	2.4327E-06	0.0047	2.9506E-01	1.5771E-04	0.0006	5.2740E+00	1.7438E-03	0.0002
1.7646E-03	2.5175E-06	0.0046	2.9560E-01	1.5758E-04	0.0006	5.3275E+00	1.6811E-03	0.0002
1.8547E-03	2.5586E-06	0.0046	2.9613E-01	1.5488E-04	0.0006	5.3811E+00	1.6248E-03	0.0002
1.9447E-03	2.6119E-06	0.0045	2.9667E-01	1.5801E-04	0.0006	5.4346E+00	1.5634E-03	0.0002
2.0347E-03	2.6574E-06	0.0045	2.9721E-01	1.5800E-04	0.0006	5.4881E+00	1.5070E-03	0.0002
2.0775E-03	1.3008E-06	0.0064	2.9747E-01	7.6126E-05	0.0008	5.5444E+00	1.5278E-03	0.0002
2.1203E-03	1.2910E-06	0.0064	2.9772E-01	7.3176E-05	0.0009	5.6007E+00	1.4705E-03	0.0002
2.1631E-03	1.3022E-06	0.0064	2.9798E-01	7.6298E-05	0.0008	5.6569E+00	1.4123E-03	0.0002
2.2059E-03	1.3248E-06	0.0064	2.9823E-01	7.3375E-05	0.0009	5.7132E+00	1.3608E-03	0.0002
2.2487E-03	1.3279E-06	0.0064	2.9849E-01	7.6158E-05	0.0008	5.7695E+00	1.3091E-03	0.0002
2.2960E-03	1.4927E-06	0.0060	2.9919E-01	2.0524E-04	0.0005	5.8287E+00	1.3220E-03	0.0002
2.3433E-03	1.4972E-06	0.0060	2.9988E-01	2.0278E-04	0.0005	5.8878E+00	1.2671E-03	0.0002
2.3906E-03	1.5044E-06	0.0060	3.0058E-01	2.0585E-04	0.0005	5.9470E+00	1.2176E-03	0.0002

Table C-1. Energy distribution of fission neutrons (cont)

Group upper energy (MeV)	Group probability	Rel. error	Group upper energy (MeV)	Group probability	Rel. error	Group upper energy (MeV)	Group probability	Rel. error
2.4379E-03	1.5239E-06	0.0059	3.0127E-01	2.0279E-04	0.0005	6.0061E+00	1.1666E-03	0.0002
2.4852E-03	1.5369E-06	0.0059	3.0197E-01	2.0593E-04	0.0005	6.0653E+00	1.1216E-03	0.0002
2.5107E-03	8.3372E-07	0.0080	3.0832E-01	1.8763E-03	0.0002	6.1275E+00	1.1290E-03	0.0002
2.5362E-03	8.3752E-07	0.0080	3.1467E-01	1.8911E-03	0.0002	6.1897E+00	1.0814E-03	0.0002
2.5616E-03	8.4630E-07	0.0080	3.2103E-01	1.9080E-03	0.0002	6.2519E+00	1.0341E-03	0.0002
2.5871E-03	8.4887E-07	0.0079	3.2738E-01	1.9189E-03	0.0002	6.3141E+00	9.9020E-04	0.0002
2.6126E-03	8.4587E-07	0.0080	3.3373E-01	1.9307E-03	0.0002	6.3763E+00	9.4754E-04	0.0002
2.6394E-03	8.9626E-07	0.0077	3.4075E-01	2.1485E-03	0.0002	6.4195E+00	6.3417E-04	0.0003
2.6662E-03	8.8957E-07	0.0078	3.4777E-01	2.1610E-03	0.0002	6.4627E+00	6.1498E-04	0.0003
2.6929E-03	8.9648E-07	0.0077	3.5479E-01	2.1759E-03	0.0002	6.5060E+00	5.9771E-04	0.0003
2.7197E-03	9.2133E-07	0.0076	3.6181E-01	2.1908E-03	0.0002	6.5492E+00	5.7814E-04	0.0003
2.7465E-03	9.1276E-07	0.0077	3.6883E-01	2.2092E-03	0.0002	6.5924E+00	5.6027E-04	0.0003
2.8043E-03	1.9885E-06	0.0052	3.7261E-01	1.1966E-03	0.0002	6.6146E+00	2.8150E-04	0.0004
2.8621E-03	1.9942E-06	0.0052	3.7639E-01	1.2011E-03	0.0002	6.6367E+00	2.7560E-04	0.0004
2.9198E-03	2.0347E-06	0.0051	3.8018E-01	1.2083E-03	0.0002	6.6589E+00	2.7253E-04	0.0004
2.9776E-03	2.0271E-06	0.0051	3.8396E-01	1.2071E-03	0.0002	6.6810E+00	2.6699E-04	0.0004
3.0354E-03	2.0579E-06	0.0051	3.8774E-01	1.2104E-03	0.0002	6.7032E+00	2.6413E-04	0.0005
3.0992E-03	2.2956E-06	0.0048	3.9172E-01	1.2770E-03	0.0002	6.7719E+00	7.9092E-04	0.0003
3.1631E-03	2.2985E-06	0.0048	3.9569E-01	1.2767E-03	0.0002	6.8407E+00	7.5384E-04	0.0003
3.2269E-03	2.3255E-06	0.0048	3.9967E-01	1.2835E-03	0.0002	6.9094E+00	7.1632E-04	0.0003
3.2908E-03	2.3567E-06	0.0048	4.0364E-01	1.2817E-03	0.0002	6.9782E+00	6.8262E-04	0.0003
3.3546E-03	2.3754E-06	0.0047	4.0762E-01	1.2882E-03	0.0002	7.0469E+00	6.4853E-04	0.0003
3.4252E-03	2.6463E-06	0.0045	4.1619E-01	2.7842E-03	0.0001	7.1192E+00	6.4816E-04	0.0003
3.4957E-03	2.6586E-06	0.0045	4.2477E-01	2.8007E-03	0.0001	7.1914E+00	6.1419E-04	0.0003
3.5663E-03	2.6938E-06	0.0045	4.3334E-01	2.8109E-03	0.0001	7.2637E+00	5.8381E-04	0.0003
3.6368E-03	2.7204E-06	0.0044	4.4192E-01	2.8289E-03	0.0001	7.3359E+00	5.5257E-04	0.0003
3.7074E-03	2.7644E-06	0.0044	4.5049E-01	2.8387E-03	0.0001	7.4082E+00	5.2484E-04	0.0003
3.8274E-03	4.6902E-06	0.0034	4.5997E-01	3.1562E-03	0.0001	7.4842E+00	5.2233E-04	0.0003
3.9474E-03	4.7921E-06	0.0033	4.6944E-01	3.1702E-03	0.0001	7.5601E+00	4.9356E-04	0.0003
4.0674E-03	4.8708E-06	0.0033	4.7892E-01	3.1944E-03	0.0001	7.6361E+00	4.6730E-04	0.0003
4.1874E-03	4.9485E-06	0.0033	4.8839E-01	3.2042E-03	0.0001	7.7120E+00	4.4140E-04	0.0003
4.3074E-03	4.9916E-06	0.0033	4.9787E-01	3.2223E-03	0.0001	7.7880E+00	4.1776E-04	0.0004
4.5521E-03	1.0368E-05	0.0023	5.0298E-01	1.7414E-03	0.0002	7.8679E+00	4.1447E-04	0.0004
4.7968E-03	1.0601E-05	0.0022	5.0808E-01	1.7413E-03	0.0002	7.9477E+00	3.8997E-04	0.0004
5.0414E-03	1.0880E-05	0.0022	5.1319E-01	1.7458E-03	0.0002	8.0276E+00	3.6835E-04	0.0004
5.2861E-03	1.1080E-05	0.0022	5.1829E-01	1.7442E-03	0.0002	8.1074E+00	3.4672E-04	0.0004
5.5308E-03	1.1379E-05	0.0022	5.2340E-01	1.7496E-03	0.0002	8.1873E+00	3.2696E-04	0.0004
5.8450E-03	1.4930E-05	0.0019	5.2877E-01	1.8416E-03	0.0002	8.2713E+00	3.2348E-04	0.0004
6.1592E-03	1.5293E-05	0.0019	5.3413E-01	1.8398E-03	0.0002	8.3552E+00	3.0346E-04	0.0004
6.4733E-03	1.5672E-05	0.0018	5.3950E-01	1.8466E-03	0.0002	8.4392E+00	2.8540E-04	0.0004
6.7875E-03	1.6052E-05	0.0018	5.4486E-01	1.8451E-03	0.0002	8.5231E+00	2.6769E-04	0.0004
7.1017E-03	1.6334E-05	0.0018	5.5023E-01	1.8520E-03	0.0002	8.6071E+00	2.5167E-04	0.0005
7.5051E-03	2.1550E-05	0.0016	5.5587E-01	1.9470E-03	0.0002	8.6954E+00	2.4800E-04	0.0005
7.9085E-03	2.2075E-05	0.0016	5.6151E-01	1.9501E-03	0.0002	8.7836E+00	2.3169E-04	0.0005
8.3120E-03	2.2617E-05	0.0015	5.6716E-01	1.9560E-03	0.0002	8.8719E+00	2.1700E-04	0.0005
8.7154E-03	2.3107E-05	0.0015	5.7280E-01	1.9552E-03	0.0002	8.9601E+00	2.0316E-04	0.0005
9.1188E-03	2.3552E-05	0.0015	5.7844E-01	1.9572E-03	0.0002	9.0484E+00	1.9035E-04	0.0005
9.4140E-03	1.7606E-05	0.0017	5.8437E-01	2.0604E-03	0.0002	9.1412E+00	1.8686E-04	0.0005
9.7093E-03	1.7985E-05	0.0017	5.9030E-01	2.0631E-03	0.0002	9.2340E+00	1.7420E-04	0.0006
1.0005E-02	1.8186E-05	0.0017	5.9624E-01	2.0670E-03	0.0002	9.3267E+00	1.6226E-04	0.0006
1.0300E-02	1.9599E-05	0.0017	6.0217E-01	2.0658E-03	0.0002	9.4195E+00	1.5138E-04	0.0006

Table C-1. Energy distribution of fission neutrons (cont)

Group upper energy (MeV)	Group probability	Rel. error	Group upper energy (MeV)	Group probability	Rel. error	Group upper energy (MeV)	Group probability	Rel. error
1.0595E-02	1.9876E-05	0.0016	6.0810E-01	2.0684E-03	0.0002	9.5123E+00	1.4124E-04	0.0006
1.0818E-02	1.5180E-05	0.0019	6.1434E-01	2.1774E-03	0.0002	9.6098E+00	1.3831E-04	0.0006
1.1041E-02	1.5275E-05	0.0019	6.2057E-01	2.1754E-03	0.0002	9.7074E+00	1.2849E-04	0.0006
1.1263E-02	1.5446E-05	0.0019	6.2681E-01	2.1783E-03	0.0002	9.8049E+00	1.1922E-04	0.0007
1.1486E-02	1.5549E-05	0.0019	6.3304E-01	2.1760E-03	0.0002	9.9025E+00	1.1089E-04	0.0007
1.1709E-02	1.5733E-05	0.0018	6.3928E-01	2.1803E-03	0.0002	1.0000E+01	1.0336E-04	0.0007
1.2374E-02	4.7700E-05	0.0011	6.4584E-01	2.2917E-03	0.0002	1.0103E+01	1.0072E-04	0.0007
1.3039E-02	4.8856E-05	0.0010	6.5239E-01	2.2895E-03	0.0002	1.0205E+01	9.2265E-05	0.0008
1.3704E-02	4.9936E-05	0.0010	6.5895E-01	2.2945E-03	0.0002	1.0308E+01	8.6251E-05	0.0008
1.4369E-02	5.1091E-05	0.0010	6.6550E-01	2.2926E-03	0.0002	1.0410E+01	7.9014E-05	0.0008
1.5034E-02	5.2132E-05	0.0010	6.7206E-01	2.2969E-03	0.0002	1.0513E+01	7.3831E-05	0.0009
1.5888E-02	6.8303E-05	0.0009	6.7895E-01	2.4135E-03	0.0001	1.0621E+01	7.1377E-05	0.0009
1.6742E-02	7.0004E-05	0.0009	6.8584E-01	2.4131E-03	0.0001	1.0729E+01	6.5802E-05	0.0009
1.7597E-02	7.1723E-05	0.0009	6.9273E-01	2.4139E-03	0.0001	1.0836E+01	6.0142E-05	0.0009
1.8451E-02	7.3116E-05	0.0009	6.9962E-01	2.4145E-03	0.0001	1.0944E+01	5.5964E-05	0.0010
1.9305E-02	7.4839E-05	0.0008	7.0651E-01	2.4147E-03	0.0001	1.1052E+01	5.1509E-05	0.0010
1.9819E-02	4.5718E-05	0.0011	7.1376E-01	2.5402E-03	0.0001	1.1165E+01	4.9558E-05	0.0010
2.0333E-02	4.5878E-05	0.0011	7.2100E-01	2.5369E-03	0.0001	1.1278E+01	4.5373E-05	0.0011
2.0847E-02	4.6290E-05	0.0011	7.2825E-01	2.5414E-03	0.0001	1.1392E+01	4.1991E-05	0.0011
2.1361E-02	4.6759E-05	0.0011	7.3549E-01	2.5393E-03	0.0001	1.1505E+01	3.8191E-05	0.0012
2.1875E-02	4.7178E-05	0.0011	7.4274E-01	2.5430E-03	0.0001	1.1618E+01	3.5026E-05	0.0012
2.2216E-02	3.1673E-05	0.0013	7.5036E-01	2.6733E-03	0.0001	1.1737E+01	3.3831E-05	0.0013
2.2557E-02	3.1788E-05	0.0013	7.5797E-01	2.6675E-03	0.0001	1.1856E+01	3.0866E-05	0.0013
2.2897E-02	3.1919E-05	0.0013	7.6559E-01	2.6709E-03	0.0001	1.1976E+01	2.8344E-05	0.0014
2.3238E-02	3.2316E-05	0.0013	7.7320E-01	2.6667E-03	0.0001	1.2095E+01	2.5664E-05	0.0014
2.3579E-02	3.2435E-05	0.0013	7.8082E-01	2.6697E-03	0.0001	1.2214E+01	2.3404E-05	0.0015
2.3698E-02	1.1385E-05	0.0022	7.8883E-01	2.8026E-03	0.0001	1.2276E+01	1.1362E-05	0.0022
2.3818E-02	1.1475E-05	0.0022	7.9683E-01	2.7969E-03	0.0001	1.2338E+01	1.0821E-05	0.0022
2.3937E-02	1.1380E-05	0.0022	8.0484E-01	2.7975E-03	0.0001	1.2399E+01	1.0168E-05	0.0023
2.4057E-02	1.1603E-05	0.0021	8.1284E-01	2.7922E-03	0.0001	1.2461E+01	9.8709E-06	0.0023
2.4176E-02	1.1486E-05	0.0022	8.2085E-01	2.7933E-03	0.0001	1.2523E+01	9.4081E-06	0.0024
2.4298E-02	1.1779E-05	0.0021	8.2927E-01	2.9342E-03	0.0001	1.2586E+01	9.0911E-06	0.0024
2.4421E-02	1.1966E-05	0.0021	8.3769E-01	2.9322E-03	0.0001	1.2650E+01	8.8002E-06	0.0025
2.4543E-02	1.1845E-05	0.0021	8.4610E-01	2.9290E-03	0.0001	1.2713E+01	8.2484E-06	0.0025
2.4666E-02	1.1898E-05	0.0021	8.5452E-01	2.9321E-03	0.0001	1.2777E+01	8.0440E-06	0.0026
2.4788E-02	1.1953E-05	0.0021	8.6294E-01	2.9285E-03	0.0001	1.2840E+01	7.4536E-06	0.0027
2.5042E-02	2.4940E-05	0.0015	8.7179E-01	3.0716E-03	0.0001	1.2972E+01	1.4577E-05	0.0019
2.5296E-02	2.5047E-05	0.0015	8.8064E-01	3.0675E-03	0.0001	1.3104E+01	1.3153E-05	0.0020
2.5550E-02	2.5119E-05	0.0015	8.8948E-01	3.0624E-03	0.0001	1.3235E+01	1.1780E-05	0.0021
2.5804E-02	2.5215E-05	0.0015	8.9833E-01	3.0620E-03	0.0001	1.3367E+01	1.0700E-05	0.0022
2.6058E-02	2.5392E-05	0.0015	9.0718E-01	3.0588E-03	0.0001	1.3499E+01	9.6200E-06	0.0024
2.6246E-02	1.8853E-05	0.0017	9.1807E-01	3.7622E-03	0.0001	1.3567E+01	4.6249E-06	0.0034
2.6435E-02	1.9022E-05	0.0017	9.2896E-01	3.7552E-03	0.0001	1.3635E+01	4.3827E-06	0.0035
2.6623E-02	1.9051E-05	0.0017	9.3986E-01	3.7517E-03	0.0001	1.3704E+01	4.2082E-06	0.0036
2.6812E-02	1.9202E-05	0.0017	9.5075E-01	3.7444E-03	0.0001	1.3772E+01	3.9392E-06	0.0037
2.7000E-02	1.9055E-05	0.0017	9.6164E-01	3.7394E-03	0.0001	1.3840E+01	3.7393E-06	0.0038
2.7300E-02	3.0579E-05	0.0013	9.6983E-01	2.8059E-03	0.0001	1.3910E+01	3.6279E-06	0.0038
2.7600E-02	3.0718E-05	0.0013	9.7802E-01	2.8039E-03	0.0001	1.3980E+01	3.4658E-06	0.0039
2.7901E-02	3.0935E-05	0.0013	9.8622E-01	2.8025E-03	0.0001	1.4051E+01	3.3136E-06	0.0040
2.8201E-02	3.1084E-05	0.0013	9.9441E-01	2.7944E-03	0.0001	1.4121E+01	3.0861E-06	0.0042
2.8501E-02	3.1250E-05	0.0013	1.0026E+00	2.8063E-03	0.0001	1.4191E+01	2.9056E-06	0.0043

ALARM-TRAN-PB-SHIELD-001

Table C-1. Energy distribution of fission neutrons (cont)

Group upper energy (MeV)	Group probability	Rel. error	Group upper energy (MeV)	Group probability	Rel. error	Group upper energy (MeV)	Group probability	Rel. error
2.9166E-02	6.9664E-05	0.0009	1.0237E+00	7.1698E-03	0.0001	1.4263E+01	2.8511E-06	0.0043
2.9832E-02	7.0492E-05	0.0009	1.0448E+00	7.1378E-03	0.0001	1.4335E+01	2.6896E-06	0.0045
3.0497E-02	7.0701E-05	0.0009	1.0658E+00	7.0709E-03	0.0001	1.4406E+01	2.5194E-06	0.0046
3.1163E-02	7.1416E-05	0.0009	1.0869E+00	7.0719E-03	0.0001	1.4478E+01	2.4012E-06	0.0047
3.1828E-02	7.2016E-05	0.0009	1.1080E+00	7.0417E-03	0.0001	1.4550E+01	2.2718E-06	0.0049
3.2324E-02	5.4251E-05	0.0010	1.1194E+00	3.7912E-03	0.0001	1.4624E+01	2.2087E-06	0.0049
3.2820E-02	5.4574E-05	0.0010	1.1307E+00	3.7496E-03	0.0001	1.4697E+01	2.0449E-06	0.0051
3.3315E-02	5.4758E-05	0.0010	1.1421E+00	3.7749E-03	0.0001	1.4771E+01	1.9702E-06	0.0052
3.3811E-02	5.5329E-05	0.0010	1.1534E+00	3.7327E-03	0.0001	1.4844E+01	1.8374E-06	0.0054
3.4307E-02	5.5684E-05	0.0010	1.1648E+00	3.7534E-03	0.0001	1.4918E+01	1.7514E-06	0.0055
3.5619E-02	1.4904E-04	0.0006	1.1768E+00	3.9388E-03	0.0001	1.5071E+01	3.2944E-06	0.0040
3.6931E-02	1.5167E-04	0.0006	1.1887E+00	3.8958E-03	0.0001	1.5224E+01	2.9413E-06	0.0043
3.8244E-02	1.5450E-04	0.0006	1.2007E+00	3.9149E-03	0.0001	1.5377E+01	2.6061E-06	0.0045
3.9556E-02	1.5670E-04	0.0006	1.2126E+00	3.8721E-03	0.0001	1.5530E+01	2.3357E-06	0.0048
4.0868E-02	1.5958E-04	0.0006	1.2246E+00	3.8882E-03	0.0001	1.5683E+01	2.0263E-06	0.0051
4.1956E-02	1.3420E-04	0.0006	1.2372E+00	4.0693E-03	0.0001	1.5844E+01	1.8988E-06	0.0053
4.3044E-02	1.3606E-04	0.0006	1.2497E+00	4.0223E-03	0.0001	1.6005E+01	1.6642E-06	0.0057
4.4133E-02	1.3768E-04	0.0006	1.2623E+00	4.0419E-03	0.0001	1.6165E+01	1.4798E-06	0.0060
4.5221E-02	1.3922E-04	0.0006	1.2748E+00	3.9953E-03	0.0001	1.6326E+01	1.2991E-06	0.0064
4.6309E-02	1.4059E-04	0.0006	1.2874E+00	4.0126E-03	0.0001	1.6487E+01	1.1390E-06	0.0069
4.7542E-02	1.6103E-04	0.0006	1.3006E+00	4.1896E-03	0.0001	1.6571E+01	5.3785E-07	0.0100
4.8775E-02	1.6304E-04	0.0006	1.3138E+00	4.1737E-03	0.0001	1.6654E+01	4.9764E-07	0.0104
5.0009E-02	1.6527E-04	0.0006	1.3270E+00	4.1567E-03	0.0001	1.6738E+01	4.7868E-07	0.0106
5.1242E-02	1.6704E-04	0.0006	1.3402E+00	4.1421E-03	0.0001	1.6821E+01	4.3258E-07	0.0111
5.2475E-02	1.6898E-04	0.0006	1.3534E+00	4.1261E-03	0.0001	1.6905E+01	4.1897E-07	0.0113
5.3292E-02	1.1303E-04	0.0007	1.3673E+00	4.3282E-03	0.0001	1.6990E+01	3.9391E-07	0.0117
5.4110E-02	1.1389E-04	0.0007	1.3811E+00	4.2791E-03	0.0001	1.7076E+01	3.7517E-07	0.0119
5.4927E-02	1.1444E-04	0.0007	1.3950E+00	4.2935E-03	0.0001	1.7161E+01	3.3924E-07	0.0126
5.5745E-02	1.1547E-04	0.0007	1.4088E+00	4.2442E-03	0.0001	1.7247E+01	3.2205E-07	0.0129
5.6562E-02	1.1620E-04	0.0007	1.4227E+00	4.2568E-03	0.0001	1.7332E+01	2.9345E-07	0.0135
5.8725E-02	3.1118E-04	0.0004	1.4373E+00	4.4495E-03	0.0001	1.7794E+01	1.3146E-06	0.0064
6.0889E-02	3.1704E-04	0.0004	1.4519E+00	4.4294E-03	0.0001	1.8255E+01	9.1324E-07	0.0077
6.3052E-02	3.2228E-04	0.0004	1.4665E+00	4.4082E-03	0.0001	1.8717E+01	6.2412E-07	0.0093
6.5216E-02	3.2768E-04	0.0004	1.4811E+00	4.3868E-03	0.0001	1.9178E+01	4.3306E-07	0.0111
6.7379E-02	3.3260E-04	0.0004	1.4957E+00	4.3644E-03	0.0001	1.9640E+01	3.0138E-07	0.0133
6.8303E-02	1.4355E-04	0.0006	1.5110E+00	4.5505E-03	0.0001	1.9712E+01	3.9306E-08	0.0369
6.9227E-02	1.4451E-04	0.0006	1.5264E+00	4.5567E-03	0.0001	1.9784E+01	3.7860E-08	0.0376
7.0150E-02	1.4533E-04	0.0006	1.5417E+00	4.5032E-03	0.0001	1.9856E+01	3.6789E-08	0.0382
7.1074E-02	1.4698E-04	0.0006	1.5571E+00	4.5076E-03	0.0001	1.9928E+01	3.0577E-08	0.0418
7.1998E-02	1.4779E-04	0.0006	1.5724E+00	4.4559E-03	0.0001	2.0000E+01	2.8810E-08	0.0431
7.3498E-02	2.4192E-04	0.0005	1.5885E+00	4.6607E-03	0.0001	2.2000E+01	3.8743E-07	0.0118
7.4998E-02	2.4414E-04	0.0005	1.6046E+00	4.6348E-03	0.0001	2.4000E+01	7.5987E-08	0.0265
7.6499E-02	2.4651E-04	0.0005	1.6208E+00	4.6360E-03	0.0001	2.6000E+01	1.4726E-08	0.0603
7.7999E-02	2.4867E-04	0.0005	1.6369E+00	4.5805E-03	0.0001	2.8000E+01	2.9452E-09	0.1348
7.9499E-02	2.5083E-04	0.0005	1.6530E+00	4.5536E-03	0.0001	3.0000E+01	1.2316E-09	0.2085

The spatial distributions of the source were created from a mesh tally in an MCNP eigenvalue simulation of the benchmark. This same distribution could have been constructed from the PTRAC data used to create the energy distribution, but the data in Table C-2 and Table C-3 actually comes from a mesh tally. The mesh tally used a cylindrical geometry that perfectly covered the fuel solution, and has a single cell in theta (azimuthal direction). In each cell of the mesh tally the fission neutron production rate per unit volume was tallied, i.e., $\phi * \Sigma_{fission} * \nu$. One will notice in the following tables that the volume of each cell of the mesh tally is exactly the same, so when this mesh tally is normalized to make a distribution the result is the same if the tally is per unit volume or not. The axial distribution was calculated by integrating over the radial direction at each axial layer in the mesh tally. Note two results of this method. First, the spatial distribution has been discretized, but it contains contributions from all fissionable isotopes in the fuel solution in the correct proportions. Second, since only a single mesh in the theta direction was used, so the source is azimuthally symmetric.

Next in Table C-2 is the axial distribution of fission neutrons plotted in Figure 4-2.

Table C-2. Axial distribution of fission neutrons.

Axial layer upper boundary (cm)	Layer probability	Rel. error	Axial layer upper boundary (cm)	Layer probability	Rel. error	Axial layer upper boundary (cm)	Layer probability	Rel. error
100 (minimum boundary)								
100.480	4.5535E-03	0.00010	112.000	1.7567E-02	0.00006	123.520	1.6247E-02	0.00006
100.960	6.3392E-03	0.00009	112.480	1.7747E-02	0.00006	124.000	1.5934E-02	0.00006
101.440	7.6344E-03	0.00009	112.960	1.7910E-02	0.00006	124.480	1.5605E-02	0.00006
101.920	8.6623E-03	0.00008	113.440	1.8052E-02	0.00006	124.960	1.5256E-02	0.00006
102.400	9.5137E-03	0.00008	113.920	1.8172E-02	0.00006	125.440	1.4887E-02	0.00006
102.880	1.0246E-02	0.00008	114.400	1.8273E-02	0.00006	125.920	1.4501E-02	0.00007
103.360	1.0891E-02	0.00007	114.880	1.8352E-02	0.00006	126.400	1.4092E-02	0.00007
103.840	1.1474E-02	0.00007	115.360	1.8412E-02	0.00006	126.880	1.3666E-02	0.00007
104.320	1.2012E-02	0.00007	115.840	1.8452E-02	0.00006	127.360	1.3218E-02	0.00007
104.800	1.2517E-02	0.00007	116.320	1.8470E-02	0.00006	127.840	1.2754E-02	0.00007
105.280	1.2992E-02	0.00007	116.800	1.8465E-02	0.00006	128.320	1.2270E-02	0.00007
105.760	1.3440E-02	0.00007	117.280	1.8442E-02	0.00006	128.800	1.1765E-02	0.00007
106.240	1.3867E-02	0.00007	117.760	1.8397E-02	0.00006	129.280	1.1239E-02	0.00007
106.720	1.4277E-02	0.00007	118.240	1.8334E-02	0.00006	129.760	1.0690E-02	0.00008
107.200	1.4667E-02	0.00006	118.720	1.8245E-02	0.00006	130.240	1.0117E-02	0.00008
107.680	1.5042E-02	0.00006	119.200	1.8135E-02	0.00006	130.720	9.5146E-03	0.00008
108.160	1.5398E-02	0.00006	119.680	1.8008E-02	0.00006	131.200	8.8817E-03	0.00008
108.640	1.5734E-02	0.00006	120.160	1.7860E-02	0.00006	131.680	8.2094E-03	0.00009
109.120	1.6054E-02	0.00006	120.640	1.7689E-02	0.00006	132.160	7.4929E-03	0.00009
109.600	1.6354E-02	0.00006	121.120	1.7502E-02	0.00006	132.640	6.7186E-03	0.00010
110.080	1.6635E-02	0.00006	121.600	1.7291E-02	0.00006	133.120	5.8709E-03	0.00010
110.560	1.6893E-02	0.00006	122.080	1.7060E-02	0.00006	133.600	4.9183E-03	0.00011
111.040	1.7137E-02	0.00006	122.560	1.6809E-02	0.00006	134.080	3.8196E-03	0.00012
111.520	1.7363E-02	0.00006	123.040	1.6537E-02	0.00006	134.560	2.4555E-03	0.00014

ALARM-TRAN-PB-SHIELD-001

Table C-3 presents the radial distributions (one per axial layer). Figure 4-3 plots three of these distributions for comparison purposes.

Table C-3. Radial distributions of fission neutrons (cont)

Radial layer outer boundary (cm)	Layer probability	Rel. error	Radial layer outer boundary (cm)	Layer probability	Rel. error	Radial layer outer boundary (cm)	Layer probability	Rel. error
3.8 (minimum boundary)			z=100.000			to z=100.480		
4.4270	2.2868E-02	0.0008	11.0810	2.0315E-02	0.0007	15.0320	1.3616E-02	0.0008
4.9760	2.3902E-02	0.0008	11.3110	1.9981E-02	0.0007	15.2030	1.3256E-02	0.0008
5.4700	2.4299E-02	0.0008	11.5370	1.9640E-02	0.0007	15.3720	1.2912E-02	0.0008
5.9230	2.4445E-02	0.0008	11.7590	1.9330E-02	0.0007	15.5390	1.2540E-02	0.0008
6.3430	2.4432E-02	0.0008	11.9760	1.9008E-02	0.0007	15.7040	1.2184E-02	0.0008
6.7380	2.4325E-02	0.0008	12.1890	1.8671E-02	0.0007	15.8670	1.1822E-02	0.0008
7.1100	2.4181E-02	0.0007	12.3990	1.8336E-02	0.0007	16.0290	1.1435E-02	0.0008
7.4640	2.3995E-02	0.0007	12.6060	1.8022E-02	0.0007	16.1890	1.1060E-02	0.0008
7.8020	2.3813E-02	0.0007	12.8090	1.7678E-02	0.0007	16.3480	1.0663E-02	0.0008
8.1260	2.3549E-02	0.0007	13.0080	1.7366E-02	0.0007	16.5050	1.0276E-02	0.0008
8.4380	2.3282E-02	0.0007	13.2050	1.7027E-02	0.0007	16.6600	9.8647E-03	0.0009
8.7380	2.3015E-02	0.0007	13.3990	1.6674E-02	0.0007	16.8140	9.4597E-03	0.0009
9.0280	2.2707E-02	0.0007	13.5900	1.6349E-02	0.0007	16.9670	9.0234E-03	0.0009
9.3100	2.2418E-02	0.0007	13.7790	1.6030E-02	0.0007	17.1190	8.5739E-03	0.0009
9.5830	2.2135E-02	0.0007	13.9650	1.5680E-02	0.0007	17.2690	8.1156E-03	0.0009
9.8480	2.1816E-02	0.0007	14.1480	1.5344E-02	0.0008	17.4170	7.6198E-03	0.0009
10.1070	2.1541E-02	0.0007	14.3300	1.5003E-02	0.0008	17.5650	7.0942E-03	0.0010
10.3590	2.1233E-02	0.0007	14.5080	1.4665E-02	0.0008	17.7110	6.5347E-03	0.0010
10.6050	2.0925E-02	0.0007	14.6850	1.4307E-02	0.0008	17.8560	5.9182E-03	0.0010
10.8460	2.0607E-02	0.0007	14.8600	1.3949E-02	0.0008	18.0000	5.1675E-03	0.0010
3.8 (minimum boundary)			z=100.480			to z=100.960		
4.4270	2.1175E-02	0.0008	11.0810	2.0461E-02	0.0006	15.0320	1.3684E-02	0.0007
4.9760	2.3295E-02	0.0008	11.3110	2.0126E-02	0.0006	15.2030	1.3319E-02	0.0007
5.4700	2.4068E-02	0.0007	11.5370	1.9808E-02	0.0006	15.3720	1.2944E-02	0.0007
5.9230	2.4380E-02	0.0007	11.7590	1.9476E-02	0.0006	15.5390	1.2576E-02	0.0007
6.3430	2.4459E-02	0.0007	11.9760	1.9156E-02	0.0006	15.7040	1.2207E-02	0.0007
6.7380	2.4451E-02	0.0007	12.1890	1.8815E-02	0.0006	15.8670	1.1827E-02	0.0008
7.1100	2.4320E-02	0.0007	12.3990	1.8472E-02	0.0007	16.0290	1.1445E-02	0.0008
7.4640	2.4135E-02	0.0007	12.6060	1.8143E-02	0.0007	16.1890	1.1052E-02	0.0008
7.8020	2.3943E-02	0.0007	12.8090	1.7814E-02	0.0007	16.3480	1.0638E-02	0.0008
8.1260	2.3726E-02	0.0007	13.0080	1.7477E-02	0.0007	16.5050	1.0231E-02	0.0008
8.4380	2.3492E-02	0.0007	13.2050	1.7135E-02	0.0007	16.6600	9.7923E-03	0.0008
8.7380	2.3184E-02	0.0007	13.3990	1.6809E-02	0.0007	16.8140	9.3414E-03	0.0008
9.0280	2.2902E-02	0.0007	13.5900	1.6476E-02	0.0007	16.9670	8.8939E-03	0.0008
9.3100	2.2614E-02	0.0006	13.7790	1.6143E-02	0.0007	17.1190	8.4137E-03	0.0008
9.5830	2.2312E-02	0.0006	13.9650	1.5786E-02	0.0007	17.2690	7.9097E-03	0.0009
9.8480	2.2021E-02	0.0006	14.1480	1.5439E-02	0.0007	17.4170	7.3687E-03	0.0009
10.1070	2.1709E-02	0.0006	14.3300	1.5112E-02	0.0007	17.5650	6.7915E-03	0.0009
10.3590	2.1412E-02	0.0006	14.5080	1.4752E-02	0.0007	17.7110	6.1725E-03	0.0009
10.6050	2.1095E-02	0.0006	14.6850	1.4387E-02	0.0007	17.8560	5.4772E-03	0.0009
10.8460	2.0780E-02	0.0006	14.8600	1.4027E-02	0.0007	18.0000	4.6315E-03	0.0009
3.8 (minimum boundary)			z=100.960			to z=101.440		
4.4270	2.0330E-02	0.0007	11.0810	2.0578E-02	0.0006	15.0320	1.3723E-02	0.0007
4.9760	2.2886E-02	0.0007	11.3110	2.0246E-02	0.0006	15.2030	1.3349E-02	0.0007
5.4700	2.3862E-02	0.0007	11.5370	1.9915E-02	0.0006	15.3720	1.2954E-02	0.0007
5.9230	2.4318E-02	0.0007	11.7590	1.9602E-02	0.0006	15.5390	1.2580E-02	0.0007

Table C-3. Radial distributions of fission neutrons (cont)

Radial layer outer boundary (cm)	Layer probability	Rel. error	Radial layer outer boundary (cm)	Layer probability	Rel. error	Radial layer outer boundary (cm)	Layer probability	Rel. error
6.3430	2.4477E-02	0.0007	11.9760	1.9264E-02	0.0006	15.7040	1.2202E-02	0.0007
6.7380	2.4481E-02	0.0006	12.1890	1.8911E-02	0.0006	15.8670	1.1808E-02	0.0007
7.1100	2.4399E-02	0.0006	12.3990	1.8581E-02	0.0006	16.0290	1.1399E-02	0.0007
7.4640	2.4245E-02	0.0006	12.6060	1.8264E-02	0.0006	16.1890	1.0999E-02	0.0007
7.8020	2.4046E-02	0.0006	12.8090	1.7906E-02	0.0006	16.3480	1.0579E-02	0.0007
8.1260	2.3815E-02	0.0006	13.0080	1.7566E-02	0.0006	16.5050	1.0149E-02	0.0007
8.4380	2.3562E-02	0.0006	13.2050	1.7226E-02	0.0006	16.6600	9.7202E-03	0.0008
8.7380	2.3317E-02	0.0006	13.3990	1.6891E-02	0.0006	16.8140	9.2462E-03	0.0008
9.0280	2.3036E-02	0.0006	13.5900	1.6549E-02	0.0006	16.9670	8.7730E-03	0.0008
9.3100	2.2744E-02	0.0006	13.7790	1.6202E-02	0.0006	17.1190	8.2850E-03	0.0008
9.5830	2.2461E-02	0.0006	13.9650	1.5857E-02	0.0006	17.2690	7.7512E-03	0.0008
9.8480	2.2147E-02	0.0006	14.1480	1.5515E-02	0.0006	17.4170	7.1873E-03	0.0008
10.1070	2.1842E-02	0.0006	14.3300	1.5171E-02	0.0006	17.5650	6.5874E-03	0.0009
10.3590	2.1522E-02	0.0006	14.5080	1.4813E-02	0.0006	17.7110	5.9439E-03	0.0009
10.6050	2.1216E-02	0.0006	14.6850	1.4439E-02	0.0006	17.8560	5.2259E-03	0.0009
10.8460	2.0898E-02	0.0006	14.8600	1.4076E-02	0.0007	18.0000	4.3655E-03	0.0009
3.8 (minimum boundary)			z=101.440			to z=101.920		
4.4270	1.9833E-02	0.0007	11.0810	2.0659E-02	0.0006	15.0320	1.3717E-02	0.0006
4.9760	2.2648E-02	0.0007	11.3110	2.0335E-02	0.0006	15.2030	1.3339E-02	0.0006
5.4700	2.3736E-02	0.0007	11.5370	1.9984E-02	0.0006	15.3720	1.2965E-02	0.0006
5.9230	2.4275E-02	0.0006	11.7590	1.9675E-02	0.0006	15.5390	1.2575E-02	0.0006
6.3430	2.4479E-02	0.0006	11.9760	1.9353E-02	0.0006	15.7040	1.2181E-02	0.0007
6.7380	2.4540E-02	0.0006	12.1890	1.9007E-02	0.0006	15.8670	1.1772E-02	0.0007
7.1100	2.4460E-02	0.0006	12.3990	1.8648E-02	0.0006	16.0290	1.1371E-02	0.0007
7.4640	2.4307E-02	0.0006	12.6060	1.8308E-02	0.0006	16.1890	1.0943E-02	0.0007
7.8020	2.4134E-02	0.0006	12.8090	1.7970E-02	0.0006	16.3480	1.0528E-02	0.0007
8.1260	2.3932E-02	0.0006	13.0080	1.7613E-02	0.0006	16.5050	1.0080E-02	0.0007
8.4380	2.3691E-02	0.0006	13.2050	1.7280E-02	0.0006	16.6600	9.6346E-03	0.0007
8.7380	2.3413E-02	0.0006	13.3990	1.6938E-02	0.0006	16.8140	9.1819E-03	0.0007
9.0280	2.3135E-02	0.0006	13.5900	1.6604E-02	0.0006	16.9670	8.6855E-03	0.0008
9.3100	2.2846E-02	0.0006	13.7790	1.6255E-02	0.0006	17.1190	8.1732E-03	0.0008
9.5830	2.2556E-02	0.0006	13.9650	1.5909E-02	0.0006	17.2690	7.6280E-03	0.0008
9.8480	2.2247E-02	0.0006	14.1480	1.5528E-02	0.0006	17.4170	7.0518E-03	0.0008
10.1070	2.1932E-02	0.0006	14.3300	1.5184E-02	0.0006	17.5650	6.4428E-03	0.0008
10.3590	2.1619E-02	0.0006	14.5080	1.4820E-02	0.0006	17.7110	5.7881E-03	0.0008
10.6050	2.1305E-02	0.0006	14.6850	1.4451E-02	0.0006	17.8560	5.0605E-03	0.0009
10.8460	2.0997E-02	0.0006	14.8600	1.4084E-02	0.0006	18.0000	4.1922E-03	0.0009
3.8 (minimum boundary)			z=101.920			to z=102.400		
4.4270	1.9580E-02	0.0007	11.0810	2.0725E-02	0.0005	15.0320	1.3722E-02	0.0006
4.9760	2.2452E-02	0.0007	11.3110	2.0418E-02	0.0006	15.2030	1.3337E-02	0.0006
5.4700	2.3625E-02	0.0006	11.5370	2.0087E-02	0.0006	15.3720	1.2948E-02	0.0006
5.9230	2.4203E-02	0.0006	11.7590	1.9750E-02	0.0006	15.5390	1.2549E-02	0.0006
6.3430	2.4468E-02	0.0006	11.9760	1.9420E-02	0.0006	15.7040	1.2159E-02	0.0006
6.7380	2.4549E-02	0.0006	12.1890	1.9064E-02	0.0006	15.8670	1.1755E-02	0.0006
7.1100	2.4503E-02	0.0006	12.3990	1.8725E-02	0.0006	16.0290	1.1329E-02	0.0006
7.4640	2.4388E-02	0.0006	12.6060	1.8380E-02	0.0006	16.1890	1.0906E-02	0.0007
7.8020	2.4206E-02	0.0006	12.8090	1.8009E-02	0.0006	16.3480	1.0478E-02	0.0007
8.1260	2.4003E-02	0.0006	13.0080	1.7666E-02	0.0006	16.5050	1.0024E-02	0.0007
8.4380	2.3750E-02	0.0006	13.2050	1.7310E-02	0.0006	16.6600	9.5575E-03	0.0007
8.7380	2.3483E-02	0.0006	13.3990	1.6973E-02	0.0006	16.8140	9.0825E-03	0.0007

Table C-3. Radial distributions of fission neutrons (cont)

Radial layer outer boundary (cm)	Layer probability	Rel. error	Radial layer outer boundary (cm)	Layer probability	Rel. error	Radial layer outer boundary (cm)	Layer probability	Rel. error
9.0280	2.3230E-02	0.0006	13.5900	1.6619E-02	0.0006	16.9670	8.5833E-03	0.0007
9.3100	2.2943E-02	0.0006	13.7790	1.6281E-02	0.0006	17.1190	8.0641E-03	0.0007
9.5830	2.2648E-02	0.0006	13.9650	1.5917E-02	0.0006	17.2690	7.5152E-03	0.0008
9.8480	2.2320E-02	0.0006	14.1480	1.5555E-02	0.0006	17.4170	6.9435E-03	0.0008
10.1070	2.2021E-02	0.0006	14.3300	1.5195E-02	0.0006	17.5650	6.3255E-03	0.0008
10.3590	2.1724E-02	0.0005	14.5080	1.4834E-02	0.0006	17.7110	5.6617E-03	0.0008
10.6050	2.1404E-02	0.0005	14.6850	1.4466E-02	0.0006	17.8560	4.9339E-03	0.0008
10.8460	2.1068E-02	0.0005	14.8600	1.4095E-02	0.0006	18.0000	4.0694E-03	0.0008
3.8 (minimum boundary)			z=102.400			to z=102.880		
4.4270	1.9431E-02	0.0007	11.0810	2.0804E-02	0.0005	15.0320	1.3699E-02	0.0006
4.9760	2.2364E-02	0.0006	11.3110	2.0478E-02	0.0005	15.2030	1.3298E-02	0.0006
5.4700	2.3607E-02	0.0006	11.5370	2.0132E-02	0.0005	15.3720	1.2923E-02	0.0006
5.9230	2.4196E-02	0.0006	11.7590	1.9795E-02	0.0005	15.5390	1.2523E-02	0.0006
6.3430	2.4486E-02	0.0006	11.9760	1.9457E-02	0.0005	15.7040	1.2119E-02	0.0006
6.7380	2.4584E-02	0.0006	12.1890	1.9105E-02	0.0005	15.8670	1.1711E-02	0.0006
7.1100	2.4540E-02	0.0006	12.3990	1.8764E-02	0.0005	16.0290	1.1291E-02	0.0006
7.4640	2.4432E-02	0.0006	12.6060	1.8410E-02	0.0005	16.1890	1.0866E-02	0.0006
7.8020	2.4245E-02	0.0006	12.8090	1.8057E-02	0.0005	16.3480	1.0424E-02	0.0006
8.1260	2.4053E-02	0.0005	13.0080	1.7715E-02	0.0005	16.5050	9.9720E-03	0.0007
8.4380	2.3823E-02	0.0005	13.2050	1.7356E-02	0.0005	16.6600	9.5098E-03	0.0007
8.7380	2.3554E-02	0.0005	13.3990	1.7011E-02	0.0005	16.8140	9.0225E-03	0.0007
9.0280	2.3292E-02	0.0005	13.5900	1.6646E-02	0.0006	16.9670	8.5123E-03	0.0007
9.3100	2.3006E-02	0.0005	13.7790	1.6285E-02	0.0006	17.1190	7.9848E-03	0.0007
9.5830	2.2720E-02	0.0005	13.9650	1.5909E-02	0.0006	17.2690	7.4294E-03	0.0007
9.8480	2.2419E-02	0.0005	14.1480	1.5558E-02	0.0006	17.4170	6.8572E-03	0.0008
10.1070	2.2107E-02	0.0005	14.3300	1.5200E-02	0.0006	17.5650	6.2357E-03	0.0008
10.3590	2.1769E-02	0.0005	14.5080	1.4824E-02	0.0006	17.7110	5.5674E-03	0.0008
10.6050	2.1446E-02	0.0005	14.6850	1.4456E-02	0.0006	17.8560	4.8393E-03	0.0008
10.8460	2.1123E-02	0.0005	14.8600	1.4082E-02	0.0006	18.0000	3.9739E-03	0.0008
3.8 (minimum boundary)			z=102.880			to z=103.360		
4.4270	1.9350E-02	0.0006	11.0810	2.0863E-02	0.0005	15.0320	1.3687E-02	0.0006
4.9760	2.2302E-02	0.0006	11.3110	2.0517E-02	0.0005	15.2030	1.3295E-02	0.0006
5.4700	2.3577E-02	0.0006	11.5370	2.0162E-02	0.0005	15.3720	1.2894E-02	0.0006
5.9230	2.4185E-02	0.0006	11.7590	1.9839E-02	0.0005	15.5390	1.2495E-02	0.0006
6.3430	2.4497E-02	0.0006	11.9760	1.9491E-02	0.0005	15.7040	1.2098E-02	0.0006
6.7380	2.4604E-02	0.0006	12.1890	1.9137E-02	0.0005	15.8670	1.1680E-02	0.0006
7.1100	2.4569E-02	0.0005	12.3990	1.8793E-02	0.0005	16.0290	1.1263E-02	0.0006
7.4640	2.4471E-02	0.0005	12.6060	1.8432E-02	0.0005	16.1890	1.0824E-02	0.0006
7.8020	2.4309E-02	0.0005	12.8090	1.8085E-02	0.0005	16.3480	1.0373E-02	0.0006
8.1260	2.4098E-02	0.0005	13.0080	1.7722E-02	0.0005	16.5050	9.9120E-03	0.0006
8.4380	2.3869E-02	0.0005	13.2050	1.7382E-02	0.0005	16.6600	9.4480E-03	0.0006
8.7380	2.3617E-02	0.0005	13.3990	1.7017E-02	0.0005	16.8140	8.9562E-03	0.0007
9.0280	2.3346E-02	0.0005	13.5900	1.6662E-02	0.0005	16.9670	8.4403E-03	0.0007
9.3100	2.3075E-02	0.0005	13.7790	1.6299E-02	0.0005	17.1190	7.9230E-03	0.0007
9.5830	2.2796E-02	0.0005	13.9650	1.5931E-02	0.0005	17.2690	7.3699E-03	0.0007
9.8480	2.2472E-02	0.0005	14.1480	1.5575E-02	0.0005	17.4170	6.7790E-03	0.0007
10.1070	2.2146E-02	0.0005	14.3300	1.5209E-02	0.0006	17.5650	6.1552E-03	0.0008
10.3590	2.1814E-02	0.0005	14.5080	1.4837E-02	0.0006	17.7110	5.4886E-03	0.0008
10.6050	2.1503E-02	0.0005	14.6850	1.4453E-02	0.0006	17.8560	4.7527E-03	0.0008
10.8460	2.1192E-02	0.0005	14.8600	1.4071E-02	0.0006	18.0000	3.8984E-03	0.0008

Table C-3. Radial distributions of fission neutrons (cont)

Radial layer outer boundary (cm)	Layer probability	Rel. error	Radial layer outer boundary (cm)	Layer probability	Rel. error	Radial layer outer boundary (cm)	Layer probability	Rel. error
3.8 (minimum boundary)			z=103.360			to z=103.840		
4.4270	1.9309E-02	0.0006	11.0810	2.0880E-02	0.0005	15.0320	1.3678E-02	0.0006
4.9760	2.2269E-02	0.0006	11.3110	2.0550E-02	0.0005	15.2030	1.3280E-02	0.0006
5.4700	2.3556E-02	0.0006	11.5370	2.0204E-02	0.0005	15.3720	1.2880E-02	0.0006
5.9230	2.4193E-02	0.0006	11.7590	1.9863E-02	0.0005	15.5390	1.2471E-02	0.0006
6.3430	2.4500E-02	0.0006	11.9760	1.9511E-02	0.0005	15.7040	1.2073E-02	0.0006
6.7380	2.4617E-02	0.0005	12.1890	1.9179E-02	0.0005	15.8670	1.1648E-02	0.0006
7.1100	2.4606E-02	0.0005	12.3990	1.8829E-02	0.0005	16.0290	1.1216E-02	0.0006
7.4640	2.4504E-02	0.0005	12.6060	1.8474E-02	0.0005	16.1890	1.0779E-02	0.0006
7.8020	2.4364E-02	0.0005	12.8090	1.8116E-02	0.0005	16.3480	1.0326E-02	0.0006
8.1260	2.4136E-02	0.0005	13.0080	1.7752E-02	0.0005	16.5050	9.8607E-03	0.0006
8.4380	2.3904E-02	0.0005	13.2050	1.7390E-02	0.0005	16.6600	9.3899E-03	0.0006
8.7380	2.3646E-02	0.0005	13.3990	1.7038E-02	0.0005	16.8140	8.9053E-03	0.0006
9.0280	2.3389E-02	0.0005	13.5900	1.6675E-02	0.0005	16.9670	8.3877E-03	0.0007
9.3100	2.3117E-02	0.0005	13.7790	1.6309E-02	0.0005	17.1190	7.8556E-03	0.0007
9.5830	2.2819E-02	0.0005	13.9650	1.5940E-02	0.0005	17.2690	7.3040E-03	0.0007
9.8480	2.2520E-02	0.0005	14.1480	1.5580E-02	0.0005	17.4170	6.7109E-03	0.0007
10.1070	2.2201E-02	0.0005	14.3300	1.5210E-02	0.0005	17.5650	6.0930E-03	0.0008
10.3590	2.1881E-02	0.0005	14.5080	1.4837E-02	0.0005	17.7110	5.4278E-03	0.0008
10.6050	2.1550E-02	0.0005	14.6850	1.4464E-02	0.0005	17.8560	4.7004E-03	0.0008
10.8460	2.1212E-02	0.0005	14.8600	1.4078E-02	0.0006	18.0000	3.8425E-03	0.0008
3.8 (minimum boundary)			z=103.840			to z=104.320		
4.4270	1.9292E-02	0.0006	11.0810	2.0925E-02	0.0005	15.0320	1.3660E-02	0.0005
4.9760	2.2260E-02	0.0006	11.3110	2.0597E-02	0.0005	15.2030	1.3256E-02	0.0006
5.4700	2.3557E-02	0.0006	11.5370	2.0247E-02	0.0005	15.3720	1.2870E-02	0.0006
5.9230	2.4196E-02	0.0006	11.7590	1.9912E-02	0.0005	15.5390	1.2471E-02	0.0006
6.3430	2.4507E-02	0.0005	11.9760	1.9545E-02	0.0005	15.7040	1.2052E-02	0.0006
6.7380	2.4637E-02	0.0005	12.1890	1.9204E-02	0.0005	15.8670	1.1622E-02	0.0006
7.1100	2.4627E-02	0.0005	12.3990	1.8836E-02	0.0005	16.0290	1.1190E-02	0.0006
7.4640	2.4518E-02	0.0005	12.6060	1.8471E-02	0.0005	16.1890	1.0741E-02	0.0006
7.8020	2.4363E-02	0.0005	12.8090	1.8127E-02	0.0005	16.3480	1.0291E-02	0.0006
8.1260	2.4174E-02	0.0005	13.0080	1.7777E-02	0.0005	16.5050	9.8229E-03	0.0006
8.4380	2.3932E-02	0.0005	13.2050	1.7416E-02	0.0005	16.6600	9.3486E-03	0.0006
8.7380	2.3702E-02	0.0005	13.3990	1.7046E-02	0.0005	16.8140	8.8508E-03	0.0006
9.0280	2.3435E-02	0.0005	13.5900	1.6677E-02	0.0005	16.9670	8.3355E-03	0.0006
9.3100	2.3143E-02	0.0005	13.7790	1.6311E-02	0.0005	17.1190	7.8045E-03	0.0007
9.5830	2.2849E-02	0.0005	13.9650	1.5947E-02	0.0005	17.2690	7.2453E-03	0.0007
9.8480	2.2553E-02	0.0005	14.1480	1.5575E-02	0.0005	17.4170	6.6650E-03	0.0007
10.1070	2.2248E-02	0.0005	14.3300	1.5193E-02	0.0005	17.5650	6.0412E-03	0.0007
10.3590	2.1925E-02	0.0005	14.5080	1.4824E-02	0.0005	17.7110	5.3784E-03	0.0008
10.6050	2.1603E-02	0.0005	14.6850	1.4446E-02	0.0005	17.8560	4.6492E-03	0.0008
10.8460	2.1254E-02	0.0005	14.8600	1.4057E-02	0.0005	18.0000	3.7992E-03	0.0008
3.8 (minimum boundary)			z=104.320			to z=104.800		
4.4270	1.9298E-02	0.0006	11.0810	2.0970E-02	0.0005	15.0320	1.3654E-02	0.0005
4.9760	2.2260E-02	0.0006	11.3110	2.0615E-02	0.0005	15.2030	1.3246E-02	0.0005
5.4700	2.3550E-02	0.0006	11.5370	2.0268E-02	0.0005	15.3720	1.2847E-02	0.0005
5.9230	2.4215E-02	0.0005	11.7590	1.9917E-02	0.0005	15.5390	1.2434E-02	0.0006
6.3430	2.4515E-02	0.0005	11.9760	1.9559E-02	0.0005	15.7040	1.2017E-02	0.0006
6.7380	2.4642E-02	0.0005	12.1890	1.9208E-02	0.0005	15.8670	1.1590E-02	0.0006
7.1100	2.4635E-02	0.0005	12.3990	1.8853E-02	0.0005	16.0290	1.1153E-02	0.0006

Table C-3. Radial distributions of fission neutrons (cont)

Radial layer outer boundary (cm)	Layer probability	Rel. error	Radial layer outer boundary (cm)	Layer probability	Rel. error	Radial layer outer boundary (cm)	Layer probability	Rel. error
7.4640	2.4553E-02	0.0005	12.6060	1.8494E-02	0.0005	16.1890	1.0714E-02	0.0006
7.8020	2.4398E-02	0.0005	12.8090	1.8147E-02	0.0005	16.3480	1.0262E-02	0.0006
8.1260	2.4209E-02	0.0005	13.0080	1.7779E-02	0.0005	16.5050	9.7847E-03	0.0006
8.4380	2.3985E-02	0.0005	13.2050	1.7417E-02	0.0005	16.6600	9.3000E-03	0.0006
8.7380	2.3756E-02	0.0005	13.3990	1.7062E-02	0.0005	16.8140	8.8076E-03	0.0006
9.0280	2.3482E-02	0.0005	13.5900	1.6699E-02	0.0005	16.9670	8.2951E-03	0.0006
9.3100	2.3190E-02	0.0005	13.7790	1.6325E-02	0.0005	17.1190	7.7531E-03	0.0007
9.5830	2.2895E-02	0.0005	13.9650	1.5954E-02	0.0005	17.2690	7.1966E-03	0.0007
9.8480	2.2584E-02	0.0005	14.1480	1.5586E-02	0.0005	17.4170	6.6152E-03	0.0007
10.1070	2.2266E-02	0.0005	14.3300	1.5199E-02	0.0005	17.5650	5.9989E-03	0.0007
10.3590	2.1945E-02	0.0005	14.5080	1.4820E-02	0.0005	17.7110	5.3353E-03	0.0008
10.6050	2.1629E-02	0.0005	14.6850	1.4420E-02	0.0005	17.8560	4.6082E-03	0.0008
10.8460	2.1289E-02	0.0005	14.8600	1.4040E-02	0.0005	18.0000	3.7606E-03	0.0008
3.8 (minimum boundary)			z=104.800			to z=105.280		
4.4270	1.9318E-02	0.0006	11.0810	2.0996E-02	0.0005	15.0320	1.3636E-02	0.0005
4.9760	2.2273E-02	0.0006	11.3110	2.0639E-02	0.0005	15.2030	1.3229E-02	0.0005
5.4700	2.3557E-02	0.0006	11.5370	2.0293E-02	0.0005	15.3720	1.2818E-02	0.0005
5.9230	2.4211E-02	0.0005	11.7590	1.9938E-02	0.0005	15.5390	1.2410E-02	0.0005
6.3430	2.4528E-02	0.0005	11.9760	1.9586E-02	0.0005	15.7040	1.1995E-02	0.0006
6.7380	2.4658E-02	0.0005	12.1890	1.9245E-02	0.0005	15.8670	1.1566E-02	0.0006
7.1100	2.4658E-02	0.0005	12.3990	1.8891E-02	0.0005	16.0290	1.1128E-02	0.0006
7.4640	2.4580E-02	0.0005	12.6060	1.8520E-02	0.0005	16.1890	1.0680E-02	0.0006
7.8020	2.4431E-02	0.0005	12.8090	1.8148E-02	0.0005	16.3480	1.0215E-02	0.0006
8.1260	2.4234E-02	0.0005	13.0080	1.7798E-02	0.0005	16.5050	9.7393E-03	0.0006
8.4380	2.4004E-02	0.0005	13.2050	1.7440E-02	0.0005	16.6600	9.2644E-03	0.0006
8.7380	2.3791E-02	0.0005	13.3990	1.7068E-02	0.0005	16.8140	8.7680E-03	0.0006
9.0280	2.3525E-02	0.0005	13.5900	1.6695E-02	0.0005	16.9670	8.2583E-03	0.0006
9.3100	2.3224E-02	0.0005	13.7790	1.6313E-02	0.0005	17.1190	7.7210E-03	0.0006
9.5830	2.2928E-02	0.0005	13.9650	1.5942E-02	0.0005	17.2690	7.1532E-03	0.0007
9.8480	2.2626E-02	0.0005	14.1480	1.5568E-02	0.0005	17.4170	6.5653E-03	0.0007
10.1070	2.2306E-02	0.0005	14.3300	1.5190E-02	0.0005	17.5650	5.9539E-03	0.0007
10.3590	2.1985E-02	0.0005	14.5080	1.4795E-02	0.0005	17.7110	5.2905E-03	0.0007
10.6050	2.1659E-02	0.0005	14.6850	1.4407E-02	0.0005	17.8560	4.5661E-03	0.0008
10.8460	2.1333E-02	0.0005	14.8600	1.4025E-02	0.0005	18.0000	3.7217E-03	0.0008
3.8 (minimum boundary)			z=105.280			to z=105.760		
4.4270	1.9340E-02	0.0006	11.0810	2.1011E-02	0.0005	15.0320	1.3616E-02	0.0005
4.9760	2.2272E-02	0.0006	11.3110	2.0669E-02	0.0005	15.2030	1.3211E-02	0.0005
5.4700	2.3562E-02	0.0005	11.5370	2.0311E-02	0.0005	15.3720	1.2806E-02	0.0005
5.9230	2.4241E-02	0.0005	11.7590	1.9963E-02	0.0005	15.5390	1.2378E-02	0.0005
6.3430	2.4564E-02	0.0005	11.9760	1.9597E-02	0.0005	15.7040	1.1964E-02	0.0005
6.7380	2.4691E-02	0.0005	12.1890	1.9252E-02	0.0005	15.8670	1.1542E-02	0.0005
7.1100	2.4696E-02	0.0005	12.3990	1.8895E-02	0.0005	16.0290	1.1103E-02	0.0006
7.4640	2.4605E-02	0.0005	12.6060	1.8523E-02	0.0005	16.1890	1.0649E-02	0.0006
7.8020	2.4446E-02	0.0005	12.8090	1.8154E-02	0.0005	16.3480	1.0182E-02	0.0006
8.1260	2.4255E-02	0.0005	13.0080	1.7799E-02	0.0005	16.5050	9.7094E-03	0.0006
8.4380	2.4042E-02	0.0005	13.2050	1.7434E-02	0.0005	16.6600	9.2304E-03	0.0006
8.7380	2.3807E-02	0.0005	13.3990	1.7053E-02	0.0005	16.8140	8.7398E-03	0.0006
9.0280	2.3539E-02	0.0005	13.5900	1.6697E-02	0.0005	16.9670	8.2241E-03	0.0006
9.3100	2.3249E-02	0.0005	13.7790	1.6328E-02	0.0005	17.1190	7.6922E-03	0.0006
9.5830	2.2966E-02	0.0005	13.9650	1.5939E-02	0.0005	17.2690	7.1316E-03	0.0007

Table C-3. Radial distributions of fission neutrons (cont)

Radial layer outer boundary (cm)	Layer probability	Rel. error	Radial layer outer boundary (cm)	Layer probability	Rel. error	Radial layer outer boundary (cm)	Layer probability	Rel. error
9.8480	2.2647E-02	0.0005	14.1480	1.5558E-02	0.0005	17.4170	6.5417E-03	0.0007
10.1070	2.2333E-02	0.0005	14.3300	1.5183E-02	0.0005	17.5650	5.9227E-03	0.0007
10.3590	2.2008E-02	0.0005	14.5080	1.4783E-02	0.0005	17.7110	5.2629E-03	0.0007
10.6050	2.1676E-02	0.0005	14.6850	1.4407E-02	0.0005	17.8560	4.5409E-03	0.0008
10.8460	2.1355E-02	0.0005	14.8600	1.4004E-02	0.0005	18.0000	3.7000E-03	0.0008
3.8 (minimum boundary)			z=105.760			to z=106.240		
4.4270	1.9377E-02	0.0006	11.0810	2.1025E-02	0.0004	15.0320	1.3591E-02	0.0005
4.9760	2.2293E-02	0.0006	11.3110	2.0685E-02	0.0004	15.2030	1.3195E-02	0.0005
5.4700	2.3600E-02	0.0005	11.5370	2.0329E-02	0.0004	15.3720	1.2789E-02	0.0005
5.9230	2.4258E-02	0.0005	11.7590	1.9972E-02	0.0004	15.5390	1.2356E-02	0.0005
6.3430	2.4561E-02	0.0005	11.9760	1.9619E-02	0.0004	15.7040	1.1931E-02	0.0005
6.7380	2.4684E-02	0.0005	12.1890	1.9268E-02	0.0005	15.8670	1.1508E-02	0.0005
7.1100	2.4707E-02	0.0005	12.3990	1.8911E-02	0.0005	16.0290	1.1070E-02	0.0006
7.4640	2.4606E-02	0.0005	12.6060	1.8548E-02	0.0005	16.1890	1.0620E-02	0.0006
7.8020	2.4464E-02	0.0005	12.8090	1.8176E-02	0.0005	16.3480	1.0160E-02	0.0006
8.1260	2.4280E-02	0.0005	13.0080	1.7810E-02	0.0005	16.5050	9.6900E-03	0.0006
8.4380	2.4057E-02	0.0005	13.2050	1.7447E-02	0.0005	16.6600	9.2113E-03	0.0006
8.7380	2.3832E-02	0.0005	13.3990	1.7069E-02	0.0005	16.8140	8.7165E-03	0.0006
9.0280	2.3562E-02	0.0005	13.5900	1.6701E-02	0.0005	16.9670	8.2050E-03	0.0006
9.3100	2.3287E-02	0.0004	13.7790	1.6323E-02	0.0005	17.1190	7.6720E-03	0.0006
9.5830	2.2976E-02	0.0004	13.9650	1.5940E-02	0.0005	17.2690	7.1014E-03	0.0006
9.8480	2.2661E-02	0.0004	14.1480	1.5560E-02	0.0005	17.4170	6.5139E-03	0.0007
10.1070	2.2347E-02	0.0004	14.3300	1.5179E-02	0.0005	17.5650	5.8926E-03	0.0007
10.3590	2.2021E-02	0.0004	14.5080	1.4793E-02	0.0005	17.7110	5.2309E-03	0.0007
10.6050	2.1692E-02	0.0004	14.6850	1.4386E-02	0.0005	17.8560	4.5091E-03	0.0007
10.8460	2.1361E-02	0.0004	14.8600	1.3998E-02	0.0005	18.0000	3.6732E-03	0.0007
3.8 (minimum boundary)			z=106.240			to z=106.720		
4.4270	1.9385E-02	0.0006	11.0810	2.1041E-02	0.0004	15.0320	1.3587E-02	0.0005
4.9760	2.2306E-02	0.0006	11.3110	2.0706E-02	0.0004	15.2030	1.3177E-02	0.0005
5.4700	2.3602E-02	0.0005	11.5370	2.0344E-02	0.0004	15.3720	1.2772E-02	0.0005
5.9230	2.4257E-02	0.0005	11.7590	2.0002E-02	0.0004	15.5390	1.2353E-02	0.0005
6.3430	2.4575E-02	0.0005	11.9760	1.9636E-02	0.0004	15.7040	1.1924E-02	0.0005
6.7380	2.4713E-02	0.0005	12.1890	1.9290E-02	0.0004	15.8670	1.1489E-02	0.0005
7.1100	2.4712E-02	0.0005	12.3990	1.8926E-02	0.0004	16.0290	1.1058E-02	0.0005
7.4640	2.4629E-02	0.0005	12.6060	1.8556E-02	0.0004	16.1890	1.0602E-02	0.0006
7.8020	2.4495E-02	0.0005	12.8090	1.8175E-02	0.0004	16.3480	1.0144E-02	0.0006
8.1260	2.4307E-02	0.0005	13.0080	1.7816E-02	0.0005	16.5050	9.6730E-03	0.0006
8.4380	2.4090E-02	0.0004	13.2050	1.7455E-02	0.0005	16.6600	9.1834E-03	0.0006
8.7380	2.3845E-02	0.0004	13.3990	1.7080E-02	0.0005	16.8140	8.6873E-03	0.0006
9.0280	2.3576E-02	0.0004	13.5900	1.6695E-02	0.0005	16.9670	8.1675E-03	0.0006
9.3100	2.3300E-02	0.0004	13.7790	1.6312E-02	0.0005	17.1190	7.6356E-03	0.0006
9.5830	2.3001E-02	0.0004	13.9650	1.5927E-02	0.0005	17.2690	7.0731E-03	0.0006
9.8480	2.2671E-02	0.0004	14.1480	1.5550E-02	0.0005	17.4170	6.4925E-03	0.0007
10.1070	2.2358E-02	0.0004	14.3300	1.5162E-02	0.0005	17.5650	5.8699E-03	0.0007
10.3590	2.2035E-02	0.0004	14.5080	1.4775E-02	0.0005	17.7110	5.2099E-03	0.0007
10.6050	2.1712E-02	0.0004	14.6850	1.4383E-02	0.0005	17.8560	4.4834E-03	0.0007
10.8460	2.1382E-02	0.0004	14.8600	1.3991E-02	0.0005	18.0000	3.6476E-03	0.0007
3.8 (minimum boundary)			z=106.720			to z=107.200		
4.4270	1.9426E-02	0.0006	11.0810	2.1053E-02	0.0004	15.0320	1.3581E-02	0.0005
4.9760	2.2330E-02	0.0005	11.3110	2.0706E-02	0.0004	15.2030	1.3165E-02	0.0005

Table C-3. Radial distributions of fission neutrons (cont)

Radial layer outer boundary (cm)	Layer probability	Rel. error	Radial layer outer boundary (cm)	Layer probability	Rel. error	Radial layer outer boundary (cm)	Layer probability	Rel. error
5.4700	2.3600E-02	0.0005	11.5370	2.0364E-02	0.0004	15.3720	1.2748E-02	0.0005
5.9230	2.4284E-02	0.0005	11.7590	1.9998E-02	0.0004	15.5390	1.2327E-02	0.0005
6.3430	2.4597E-02	0.0005	11.9760	1.9644E-02	0.0004	15.7040	1.1901E-02	0.0005
6.7380	2.4728E-02	0.0005	12.1890	1.9276E-02	0.0004	15.8670	1.1476E-02	0.0005
7.1100	2.4723E-02	0.0005	12.3990	1.8937E-02	0.0004	16.0290	1.1039E-02	0.0005
7.4640	2.4645E-02	0.0005	12.6060	1.8585E-02	0.0004	16.1890	1.0581E-02	0.0005
7.8020	2.4507E-02	0.0005	12.8090	1.8203E-02	0.0004	16.3480	1.0119E-02	0.0006
8.1260	2.4319E-02	0.0004	13.0080	1.7826E-02	0.0004	16.5050	9.6461E-03	0.0006
8.4380	2.4099E-02	0.0004	13.2050	1.7447E-02	0.0004	16.6600	9.1566E-03	0.0006
8.7380	2.3859E-02	0.0004	13.3990	1.7070E-02	0.0005	16.8140	8.6571E-03	0.0006
9.0280	2.3597E-02	0.0004	13.5900	1.6695E-02	0.0005	16.9670	8.1460E-03	0.0006
9.3100	2.3311E-02	0.0004	13.7790	1.6309E-02	0.0005	17.1190	7.6125E-03	0.0006
9.5830	2.3012E-02	0.0004	13.9650	1.5930E-02	0.0005	17.2690	7.0465E-03	0.0006
9.8480	2.2710E-02	0.0004	14.1480	1.5553E-02	0.0005	17.4170	6.4632E-03	0.0006
10.1070	2.2391E-02	0.0004	14.3300	1.5157E-02	0.0005	17.5650	5.8455E-03	0.0007
10.3590	2.2067E-02	0.0004	14.5080	1.4767E-02	0.0005	17.7110	5.1836E-03	0.0007
10.6050	2.1733E-02	0.0004	14.6850	1.4377E-02	0.0005	17.8560	4.4623E-03	0.0007
10.8460	2.1397E-02	0.0004	14.8600	1.3986E-02	0.0005	18.0000	3.6247E-03	0.0007
3.8 (minimum boundary)			z=107.200			to z=107.680		
4.4270	1.9448E-02	0.0006	11.0810	2.1076E-02	0.0004	15.0320	1.3559E-02	0.0005
4.9760	2.2358E-02	0.0005	11.3110	2.0714E-02	0.0004	15.2030	1.3141E-02	0.0005
5.4700	2.3617E-02	0.0005	11.5370	2.0368E-02	0.0004	15.3720	1.2742E-02	0.0005
5.9230	2.4280E-02	0.0005	11.7590	2.0023E-02	0.0004	15.5390	1.2320E-02	0.0005
6.3430	2.4598E-02	0.0005	11.9760	1.9664E-02	0.0004	15.7040	1.1900E-02	0.0005
6.7380	2.4728E-02	0.0005	12.1890	1.9305E-02	0.0004	15.8670	1.1476E-02	0.0005
7.1100	2.4737E-02	0.0005	12.3990	1.8928E-02	0.0004	16.0290	1.1031E-02	0.0005
7.4640	2.4656E-02	0.0005	12.6060	1.8564E-02	0.0004	16.1890	1.0570E-02	0.0005
7.8020	2.4515E-02	0.0004	12.8090	1.8189E-02	0.0004	16.3480	1.0097E-02	0.0005
8.1260	2.4327E-02	0.0004	13.0080	1.7825E-02	0.0004	16.5050	9.6191E-03	0.0006
8.4380	2.4122E-02	0.0004	13.2050	1.7448E-02	0.0004	16.6600	9.1378E-03	0.0006
8.7380	2.3880E-02	0.0004	13.3990	1.7068E-02	0.0004	16.8140	8.6352E-03	0.0006
9.0280	2.3603E-02	0.0004	13.5900	1.6696E-02	0.0004	16.9670	8.1276E-03	0.0006
9.3100	2.3317E-02	0.0004	13.7790	1.6310E-02	0.0005	17.1190	7.5966E-03	0.0006
9.5830	2.3027E-02	0.0004	13.9650	1.5928E-02	0.0005	17.2690	7.0288E-03	0.0006
9.8480	2.2737E-02	0.0004	14.1480	1.5551E-02	0.0005	17.4170	6.4417E-03	0.0006
10.1070	2.2419E-02	0.0004	14.3300	1.5155E-02	0.0005	17.5650	5.8270E-03	0.0007
10.3590	2.2092E-02	0.0004	14.5080	1.4755E-02	0.0005	17.7110	5.1614E-03	0.0007
10.6050	2.1757E-02	0.0004	14.6850	1.4369E-02	0.0005	17.8560	4.4436E-03	0.0007
10.8460	2.1416E-02	0.0004	14.8600	1.3963E-02	0.0005	18.0000	3.6088E-03	0.0007
3.8 (minimum boundary)			z=107.680			to z=108.160		
4.4270	1.9450E-02	0.0005	11.0810	2.1079E-02	0.0004	15.0320	1.3563E-02	0.0005
4.9760	2.2367E-02	0.0005	11.3110	2.0734E-02	0.0004	15.2030	1.3145E-02	0.0005
5.4700	2.3647E-02	0.0005	11.5370	2.0380E-02	0.0004	15.3720	1.2731E-02	0.0005
5.9230	2.4271E-02	0.0005	11.7590	2.0032E-02	0.0004	15.5390	1.2309E-02	0.0005
6.3430	2.4617E-02	0.0005	11.9760	1.9663E-02	0.0004	15.7040	1.1885E-02	0.0005
6.7380	2.4741E-02	0.0005	12.1890	1.9308E-02	0.0004	15.8670	1.1443E-02	0.0005
7.1100	2.4756E-02	0.0005	12.3990	1.8947E-02	0.0004	16.0290	1.1000E-02	0.0005
7.4640	2.4680E-02	0.0004	12.6060	1.8574E-02	0.0004	16.1890	1.0547E-02	0.0005
7.8020	2.4524E-02	0.0004	12.8090	1.8197E-02	0.0004	16.3480	1.0083E-02	0.0005
8.1260	2.4361E-02	0.0004	13.0080	1.7822E-02	0.0004	16.5050	9.6089E-03	0.0006

Table C-3. Radial distributions of fission neutrons (cont)

Radial layer outer boundary (cm)	Layer probability	Rel. error	Radial layer outer boundary (cm)	Layer probability	Rel. error	Radial layer outer boundary (cm)	Layer probability	Rel. error
8.4380	2.4140E-02	0.0004	13.2050	1.7439E-02	0.0004	16.6600	9.1193E-03	0.0006
8.7380	2.3902E-02	0.0004	13.3990	1.7062E-02	0.0004	16.8140	8.6200E-03	0.0006
9.0280	2.3637E-02	0.0004	13.5900	1.6687E-02	0.0004	16.9670	8.1053E-03	0.0006
9.3100	2.3336E-02	0.0004	13.7790	1.6313E-02	0.0004	17.1190	7.5724E-03	0.0006
9.5830	2.3032E-02	0.0004	13.9650	1.5936E-02	0.0004	17.2690	7.0147E-03	0.0006
9.8480	2.2742E-02	0.0004	14.1480	1.5548E-02	0.0005	17.4170	6.4270E-03	0.0006
10.1070	2.2430E-02	0.0004	14.3300	1.5146E-02	0.0005	17.5650	5.8056E-03	0.0007
10.3590	2.2102E-02	0.0004	14.5080	1.4747E-02	0.0005	17.7110	5.1425E-03	0.0007
10.6050	2.1762E-02	0.0004	14.6850	1.4363E-02	0.0005	17.8560	4.4236E-03	0.0007
10.8460	2.1421E-02	0.0004	14.8600	1.3968E-02	0.0005	18.0000	3.5891E-03	0.0007
3.8 (minimum boundary)			z=108.160			to z=108.640		
4.4270	1.9474E-02	0.0005	11.0810	2.1086E-02	0.0004	15.0320	1.3558E-02	0.0005
4.9760	2.2376E-02	0.0005	11.3110	2.0739E-02	0.0004	15.2030	1.3132E-02	0.0005
5.4700	2.3647E-02	0.0005	11.5370	2.0385E-02	0.0004	15.3720	1.2723E-02	0.0005
5.9230	2.4283E-02	0.0005	11.7590	2.0033E-02	0.0004	15.5390	1.2298E-02	0.0005
6.3430	2.4625E-02	0.0005	11.9760	1.9672E-02	0.0004	15.7040	1.1869E-02	0.0005
6.7380	2.4757E-02	0.0005	12.1890	1.9300E-02	0.0004	15.8670	1.1428E-02	0.0005
7.1100	2.4755E-02	0.0004	12.3990	1.8939E-02	0.0004	16.0290	1.0980E-02	0.0005
7.4640	2.4679E-02	0.0004	12.6060	1.8574E-02	0.0004	16.1890	1.0529E-02	0.0005
7.8020	2.4532E-02	0.0004	12.8090	1.8210E-02	0.0004	16.3480	1.0070E-02	0.0005
8.1260	2.4370E-02	0.0004	13.0080	1.7830E-02	0.0004	16.5050	9.6001E-03	0.0005
8.4380	2.4143E-02	0.0004	13.2050	1.7447E-02	0.0004	16.6600	9.1212E-03	0.0006
8.7380	2.3922E-02	0.0004	13.3990	1.7072E-02	0.0004	16.8140	8.6145E-03	0.0006
9.0280	2.3656E-02	0.0004	13.5900	1.6690E-02	0.0004	16.9670	8.0961E-03	0.0006
9.3100	2.3373E-02	0.0004	13.7790	1.6308E-02	0.0004	17.1190	7.5532E-03	0.0006
9.5830	2.3065E-02	0.0004	13.9650	1.5913E-02	0.0004	17.2690	6.9920E-03	0.0006
9.8480	2.2766E-02	0.0004	14.1480	1.5538E-02	0.0004	17.4170	6.4095E-03	0.0006
10.1070	2.2434E-02	0.0004	14.3300	1.5142E-02	0.0005	17.5650	5.7921E-03	0.0007
10.3590	2.2104E-02	0.0004	14.5080	1.4752E-02	0.0005	17.7110	5.1328E-03	0.0007
10.6050	2.1786E-02	0.0004	14.6850	1.4353E-02	0.0005	17.8560	4.4078E-03	0.0007
10.8460	2.1435E-02	0.0004	14.8600	1.3953E-02	0.0005	18.0000	3.5738E-03	0.0007
3.8 (minimum boundary)			z=108.640			to z=109.120		
4.4270	1.9494E-02	0.0005	11.0810	2.1109E-02	0.0004	15.0320	1.3533E-02	0.0005
4.9760	2.2395E-02	0.0005	11.3110	2.0760E-02	0.0004	15.2030	1.3116E-02	0.0005
5.4700	2.3653E-02	0.0005	11.5370	2.0398E-02	0.0004	15.3720	1.2703E-02	0.0005
5.9230	2.4296E-02	0.0005	11.7590	2.0041E-02	0.0004	15.5390	1.2275E-02	0.0005
6.3430	2.4643E-02	0.0005	11.9760	1.9685E-02	0.0004	15.7040	1.1854E-02	0.0005
6.7380	2.4758E-02	0.0004	12.1890	1.9319E-02	0.0004	15.8670	1.1413E-02	0.0005
7.1100	2.4781E-02	0.0004	12.3990	1.8950E-02	0.0004	16.0290	1.0972E-02	0.0005
7.4640	2.4695E-02	0.0004	12.6060	1.8587E-02	0.0004	16.1890	1.0516E-02	0.0005
7.8020	2.4555E-02	0.0004	12.8090	1.8215E-02	0.0004	16.3480	1.0052E-02	0.0005
8.1260	2.4373E-02	0.0004	13.0080	1.7833E-02	0.0004	16.5050	9.5788E-03	0.0005
8.4380	2.4151E-02	0.0004	13.2050	1.7453E-02	0.0004	16.6600	9.0897E-03	0.0006
8.7380	2.3913E-02	0.0004	13.3990	1.7075E-02	0.0004	16.8140	8.5942E-03	0.0006
9.0280	2.3661E-02	0.0004	13.5900	1.6705E-02	0.0004	16.9670	8.0751E-03	0.0006
9.3100	2.3401E-02	0.0004	13.7790	1.6316E-02	0.0004	17.1190	7.5306E-03	0.0006
9.5830	2.3086E-02	0.0004	13.9650	1.5928E-02	0.0004	17.2690	6.9726E-03	0.0006
9.8480	2.2767E-02	0.0004	14.1480	1.5524E-02	0.0004	17.4170	6.3888E-03	0.0006
10.1070	2.2456E-02	0.0004	14.3300	1.5136E-02	0.0004	17.5650	5.7685E-03	0.0006
10.3590	2.2127E-02	0.0004	14.5080	1.4740E-02	0.0005	17.7110	5.1142E-03	0.0007

Table C-3. Radial distributions of fission neutrons (cont)

Radial layer outer boundary (cm)	Layer probability	Rel. error	Radial layer outer boundary (cm)	Layer probability	Rel. error	Radial layer outer boundary (cm)	Layer probability	Rel. error
10.6050	2.1789E-02	0.0004	14.6850	1.4337E-02	0.0005	17.8560	4.3979E-03	0.0007
10.8460	2.1455E-02	0.0004	14.8600	1.3932E-02	0.0005	18.0000	3.5613E-03	0.0007
3.8 (minimum boundary)			z=109.120			to z=109.600		
4.4270	1.9513E-02	0.0005	11.0810	2.1117E-02	0.0004	15.0320	1.3522E-02	0.0005
4.9760	2.2391E-02	0.0005	11.3110	2.0755E-02	0.0004	15.2030	1.3113E-02	0.0005
5.4700	2.3680E-02	0.0005	11.5370	2.0406E-02	0.0004	15.3720	1.2696E-02	0.0005
5.9230	2.4328E-02	0.0005	11.7590	2.0053E-02	0.0004	15.5390	1.2270E-02	0.0005
6.3430	2.4648E-02	0.0005	11.9760	1.9698E-02	0.0004	15.7040	1.1843E-02	0.0005
6.7380	2.4784E-02	0.0004	12.1890	1.9318E-02	0.0004	15.8670	1.1409E-02	0.0005
7.1100	2.4793E-02	0.0004	12.3990	1.8953E-02	0.0004	16.0290	1.0969E-02	0.0005
7.4640	2.4706E-02	0.0004	12.6060	1.8588E-02	0.0004	16.1890	1.0506E-02	0.0005
7.8020	2.4576E-02	0.0004	12.8090	1.8210E-02	0.0004	16.3480	1.0039E-02	0.0005
8.1260	2.4410E-02	0.0004	13.0080	1.7831E-02	0.0004	16.5050	9.5652E-03	0.0005
8.4380	2.4174E-02	0.0004	13.2050	1.7458E-02	0.0004	16.6600	9.0859E-03	0.0005
8.7380	2.3917E-02	0.0004	13.3990	1.7069E-02	0.0004	16.8140	8.5826E-03	0.0006
9.0280	2.3665E-02	0.0004	13.5900	1.6688E-02	0.0004	16.9670	8.0631E-03	0.0006
9.3100	2.3380E-02	0.0004	13.7790	1.6306E-02	0.0004	17.1190	7.5232E-03	0.0006
9.5830	2.3083E-02	0.0004	13.9650	1.5911E-02	0.0004	17.2690	6.9589E-03	0.0006
9.8480	2.2780E-02	0.0004	14.1480	1.5527E-02	0.0004	17.4170	6.3746E-03	0.0006
10.1070	2.2468E-02	0.0004	14.3300	1.5128E-02	0.0004	17.5650	5.7574E-03	0.0006
10.3590	2.2124E-02	0.0004	14.5080	1.4731E-02	0.0004	17.7110	5.1013E-03	0.0007
10.6050	2.1798E-02	0.0004	14.6850	1.4335E-02	0.0005	17.8560	4.3794E-03	0.0007
10.8460	2.1458E-02	0.0004	14.8600	1.3930E-02	0.0005	18.0000	3.5522E-03	0.0007
3.8 (minimum boundary)			z=109.600			to z=110.080		
4.4270	1.9518E-02	0.0005	11.0810	2.1124E-02	0.0004	15.0320	1.3508E-02	0.0005
4.9760	2.2403E-02	0.0005	11.3110	2.0763E-02	0.0004	15.2030	1.3105E-02	0.0005
5.4700	2.3688E-02	0.0005	11.5370	2.0409E-02	0.0004	15.3720	1.2689E-02	0.0005
5.9230	2.4327E-02	0.0005	11.7590	2.0058E-02	0.0004	15.5390	1.2260E-02	0.0005
6.3430	2.4647E-02	0.0005	11.9760	1.9689E-02	0.0004	15.7040	1.1831E-02	0.0005
6.7380	2.4776E-02	0.0004	12.1890	1.9324E-02	0.0004	15.8670	1.1402E-02	0.0005
7.1100	2.4798E-02	0.0004	12.3990	1.8962E-02	0.0004	16.0290	1.0952E-02	0.0005
7.4640	2.4715E-02	0.0004	12.6060	1.8586E-02	0.0004	16.1890	1.0501E-02	0.0005
7.8020	2.4591E-02	0.0004	12.8090	1.8217E-02	0.0004	16.3480	1.0032E-02	0.0005
8.1260	2.4403E-02	0.0004	13.0080	1.7836E-02	0.0004	16.5050	9.5619E-03	0.0005
8.4380	2.4191E-02	0.0004	13.2050	1.7456E-02	0.0004	16.6600	9.0730E-03	0.0005
8.7380	2.3939E-02	0.0004	13.3990	1.7077E-02	0.0004	16.8140	8.5683E-03	0.0006
9.0280	2.3673E-02	0.0004	13.5900	1.6685E-02	0.0004	16.9670	8.0510E-03	0.0006
9.3100	2.3395E-02	0.0004	13.7790	1.6298E-02	0.0004	17.1190	7.5139E-03	0.0006
9.5830	2.3101E-02	0.0004	13.9650	1.5914E-02	0.0004	17.2690	6.9520E-03	0.0006
9.8480	2.2788E-02	0.0004	14.1480	1.5531E-02	0.0004	17.4170	6.3636E-03	0.0006
10.1070	2.2474E-02	0.0004	14.3300	1.5126E-02	0.0004	17.5650	5.7474E-03	0.0006
10.3590	2.2141E-02	0.0004	14.5080	1.4730E-02	0.0004	17.7110	5.0872E-03	0.0007
10.6050	2.1808E-02	0.0004	14.6850	1.4338E-02	0.0004	17.8560	4.3711E-03	0.0007
10.8460	2.1467E-02	0.0004	14.8600	1.3924E-02	0.0005	18.0000	3.5412E-03	0.0007
3.8 (minimum boundary)			z=110.080			to z=110.560		
4.4270	1.9520E-02	0.0005	11.0810	2.1141E-02	0.0004	15.0320	1.3518E-02	0.0005
4.9760	2.2421E-02	0.0005	11.3110	2.0775E-02	0.0004	15.2030	1.3103E-02	0.0005
5.4700	2.3686E-02	0.0005	11.5370	2.0419E-02	0.0004	15.3720	1.2683E-02	0.0005
5.9230	2.4331E-02	0.0005	11.7590	2.0058E-02	0.0004	15.5390	1.2258E-02	0.0005
6.3430	2.4659E-02	0.0004	11.9760	1.9698E-02	0.0004	15.7040	1.1817E-02	0.0005

Table C-3. Radial distributions of fission neutrons (cont)

Radial layer outer boundary (cm)	Layer probability	Rel. error	Radial layer outer boundary (cm)	Layer probability	Rel. error	Radial layer outer boundary (cm)	Layer probability	Rel. error
6.7380	2.4789E-02	0.0004	12.1890	1.9331E-02	0.0004	15.8670	1.1385E-02	0.0005
7.1100	2.4809E-02	0.0004	12.3990	1.8953E-02	0.0004	16.0290	1.0943E-02	0.0005
7.4640	2.4738E-02	0.0004	12.6060	1.8581E-02	0.0004	16.1890	1.0485E-02	0.0005
7.8020	2.4596E-02	0.0004	12.8090	1.8205E-02	0.0004	16.3480	1.0020E-02	0.0005
8.1260	2.4412E-02	0.0004	13.0080	1.7820E-02	0.0004	16.5050	9.5509E-03	0.0005
8.4380	2.4197E-02	0.0004	13.2050	1.7443E-02	0.0004	16.6600	9.0701E-03	0.0005
8.7380	2.3944E-02	0.0004	13.3990	1.7064E-02	0.0004	16.8140	8.5618E-03	0.0006
9.0280	2.3688E-02	0.0004	13.5900	1.6683E-02	0.0004	16.9670	8.0478E-03	0.0006
9.3100	2.3416E-02	0.0004	13.7790	1.6302E-02	0.0004	17.1190	7.5001E-03	0.0006
9.5830	2.3123E-02	0.0004	13.9650	1.5913E-02	0.0004	17.2690	6.9429E-03	0.0006
9.8480	2.2800E-02	0.0004	14.1480	1.5529E-02	0.0004	17.4170	6.3525E-03	0.0006
10.1070	2.2470E-02	0.0004	14.3300	1.5130E-02	0.0004	17.5650	5.7385E-03	0.0006
10.3590	2.2150E-02	0.0004	14.5080	1.4723E-02	0.0004	17.7110	5.0738E-03	0.0007
10.6050	2.1811E-02	0.0004	14.6850	1.4325E-02	0.0004	17.8560	4.3592E-03	0.0007
10.8460	2.1489E-02	0.0004	14.8600	1.3917E-02	0.0004	18.0000	3.5306E-03	0.0007
3.8 (minimum boundary)			z=110.560			to z=111.040		
4.4270	1.9549E-02	0.0005	11.0810	2.1129E-02	0.0004	15.0320	1.3515E-02	0.0005
4.9760	2.2418E-02	0.0005	11.3110	2.0777E-02	0.0004	15.2030	1.3102E-02	0.0005
5.4700	2.3679E-02	0.0005	11.5370	2.0425E-02	0.0004	15.3720	1.2681E-02	0.0005
5.9230	2.4338E-02	0.0005	11.7590	2.0069E-02	0.0004	15.5390	1.2247E-02	0.0005
6.3430	2.4670E-02	0.0004	11.9760	1.9705E-02	0.0004	15.7040	1.1819E-02	0.0005
6.7380	2.4801E-02	0.0004	12.1890	1.9331E-02	0.0004	15.8670	1.1383E-02	0.0005
7.1100	2.4807E-02	0.0004	12.3990	1.8956E-02	0.0004	16.0290	1.0934E-02	0.0005
7.4640	2.4716E-02	0.0004	12.6060	1.8579E-02	0.0004	16.1890	1.0478E-02	0.0005
7.8020	2.4583E-02	0.0004	12.8090	1.8213E-02	0.0004	16.3480	1.0018E-02	0.0005
8.1260	2.4406E-02	0.0004	13.0080	1.7828E-02	0.0004	16.5050	9.5388E-03	0.0005
8.4380	2.4198E-02	0.0004	13.2050	1.7449E-02	0.0004	16.6600	9.0566E-03	0.0005
8.7380	2.3970E-02	0.0004	13.3990	1.7075E-02	0.0004	16.8140	8.5499E-03	0.0006
9.0280	2.3716E-02	0.0004	13.5900	1.6691E-02	0.0004	16.9670	8.0325E-03	0.0006
9.3100	2.3418E-02	0.0004	13.7790	1.6305E-02	0.0004	17.1190	7.4939E-03	0.0006
9.5830	2.3116E-02	0.0004	13.9650	1.5915E-02	0.0004	17.2690	6.9272E-03	0.0006
9.8480	2.2814E-02	0.0004	14.1480	1.5517E-02	0.0004	17.4170	6.3444E-03	0.0006
10.1070	2.2501E-02	0.0004	14.3300	1.5125E-02	0.0004	17.5650	5.7272E-03	0.0006
10.3590	2.2158E-02	0.0004	14.5080	1.4725E-02	0.0004	17.7110	5.0638E-03	0.0007
10.6050	2.1822E-02	0.0004	14.6850	1.4321E-02	0.0004	17.8560	4.3500E-03	0.0007
10.8460	2.1478E-02	0.0004	14.8600	1.3919E-02	0.0004	18.0000	3.5271E-03	0.0007
3.8 (minimum boundary)			z=111.040			to z=111.520		
4.4270	1.9543E-02	0.0005	11.0810	2.1129E-02	0.0004	15.0320	1.3503E-02	0.0004
4.9760	2.2430E-02	0.0005	11.3110	2.0797E-02	0.0004	15.2030	1.3087E-02	0.0005
5.4700	2.3701E-02	0.0005	11.5370	2.0443E-02	0.0004	15.3720	1.2676E-02	0.0005
5.9230	2.4341E-02	0.0005	11.7590	2.0078E-02	0.0004	15.5390	1.2245E-02	0.0005
6.3430	2.4671E-02	0.0004	11.9760	1.9708E-02	0.0004	15.7040	1.1820E-02	0.0005
6.7380	2.4810E-02	0.0004	12.1890	1.9330E-02	0.0004	15.8670	1.1380E-02	0.0005
7.1100	2.4818E-02	0.0004	12.3990	1.8967E-02	0.0004	16.0290	1.0933E-02	0.0005
7.4640	2.4749E-02	0.0004	12.6060	1.8590E-02	0.0004	16.1890	1.0471E-02	0.0005
7.8020	2.4611E-02	0.0004	12.8090	1.8210E-02	0.0004	16.3480	1.0006E-02	0.0005
8.1260	2.4433E-02	0.0004	13.0080	1.7843E-02	0.0004	16.5050	9.5310E-03	0.0005
8.4380	2.4214E-02	0.0004	13.2050	1.7450E-02	0.0004	16.6600	9.0379E-03	0.0005
8.7380	2.3972E-02	0.0004	13.3990	1.7073E-02	0.0004	16.8140	8.5334E-03	0.0005
9.0280	2.3691E-02	0.0004	13.5900	1.6681E-02	0.0004	16.9670	8.0129E-03	0.0006

Table C-3. Radial distributions of fission neutrons (cont)

Radial layer outer boundary (cm)	Layer probability	Rel. error	Radial layer outer boundary (cm)	Layer probability	Rel. error	Radial layer outer boundary (cm)	Layer probability	Rel. error
9.3100	2.3414E-02	0.0004	13.7790	1.6297E-02	0.0004	17.1190	7.4802E-03	0.0006
9.5830	2.3135E-02	0.0004	13.9650	1.5898E-02	0.0004	17.2690	6.9236E-03	0.0006
9.8480	2.2815E-02	0.0004	14.1480	1.5514E-02	0.0004	17.4170	6.3387E-03	0.0006
10.1070	2.2505E-02	0.0004	14.3300	1.5113E-02	0.0004	17.5650	5.7196E-03	0.0006
10.3590	2.2172E-02	0.0004	14.5080	1.4715E-02	0.0004	17.7110	5.0542E-03	0.0006
10.6050	2.1828E-02	0.0004	14.6850	1.4318E-02	0.0004	17.8560	4.3416E-03	0.0007
10.8460	2.1481E-02	0.0004	14.8600	1.3907E-02	0.0004	18.0000	3.5114E-03	0.0007
3.8 (minimum boundary)			z=111.520			to z=112.000		
4.4270	1.9554E-02	0.0005	11.0810	2.1133E-02	0.0004	15.0320	1.3500E-02	0.0004
4.9760	2.2438E-02	0.0005	11.3110	2.0788E-02	0.0004	15.2030	1.3090E-02	0.0005
5.4700	2.3697E-02	0.0005	11.5370	2.0440E-02	0.0004	15.3720	1.2670E-02	0.0005
5.9230	2.4350E-02	0.0004	11.7590	2.0078E-02	0.0004	15.5390	1.2238E-02	0.0005
6.3430	2.4693E-02	0.0004	11.9760	1.9700E-02	0.0004	15.7040	1.1803E-02	0.0005
6.7380	2.4839E-02	0.0004	12.1890	1.9329E-02	0.0004	15.8670	1.1363E-02	0.0005
7.1100	2.4838E-02	0.0004	12.3990	1.8971E-02	0.0004	16.0290	1.0909E-02	0.0005
7.4640	2.4757E-02	0.0004	12.6060	1.8611E-02	0.0004	16.1890	1.0455E-02	0.0005
7.8020	2.4631E-02	0.0004	12.8090	1.8209E-02	0.0004	16.3480	9.9922E-03	0.0005
8.1260	2.4435E-02	0.0004	13.0080	1.7825E-02	0.0004	16.5050	9.5201E-03	0.0005
8.4380	2.4212E-02	0.0004	13.2050	1.7442E-02	0.0004	16.6600	9.0361E-03	0.0005
8.7380	2.3964E-02	0.0004	13.3990	1.7065E-02	0.0004	16.8140	8.5255E-03	0.0005
9.0280	2.3717E-02	0.0004	13.5900	1.6676E-02	0.0004	16.9670	8.0129E-03	0.0006
9.3100	2.3432E-02	0.0004	13.7790	1.6288E-02	0.0004	17.1190	7.4756E-03	0.0006
9.5830	2.3131E-02	0.0004	13.9650	1.5905E-02	0.0004	17.2690	6.9149E-03	0.0006
9.8480	2.2828E-02	0.0004	14.1480	1.5505E-02	0.0004	17.4170	6.3306E-03	0.0006
10.1070	2.2509E-02	0.0004	14.3300	1.5108E-02	0.0004	17.5650	5.7145E-03	0.0006
10.3590	2.2185E-02	0.0004	14.5080	1.4716E-02	0.0004	17.7110	5.0546E-03	0.0006
10.6050	2.1840E-02	0.0004	14.6850	1.4313E-02	0.0004	17.8560	4.3359E-03	0.0007
10.8460	2.1491E-02	0.0004	14.8600	1.3908E-02	0.0004	18.0000	3.5114E-03	0.0007
3.8 (minimum boundary)			z=112.000			to z=112.480		
4.4270	1.9560E-02	0.0005	11.0810	2.1130E-02	0.0004	15.0320	1.3496E-02	0.0004
4.9760	2.2425E-02	0.0005	11.3110	2.0785E-02	0.0004	15.2030	1.3086E-02	0.0004
5.4700	2.3719E-02	0.0005	11.5370	2.0438E-02	0.0004	15.3720	1.2662E-02	0.0005
5.9230	2.4359E-02	0.0004	11.7590	2.0080E-02	0.0004	15.5390	1.2231E-02	0.0005
6.3430	2.4689E-02	0.0004	11.9760	1.9707E-02	0.0004	15.7040	1.1795E-02	0.0005
6.7380	2.4827E-02	0.0004	12.1890	1.9342E-02	0.0004	15.8670	1.1359E-02	0.0005
7.1100	2.4843E-02	0.0004	12.3990	1.8961E-02	0.0004	16.0290	1.0908E-02	0.0005
7.4640	2.4789E-02	0.0004	12.6060	1.8590E-02	0.0004	16.1890	1.0458E-02	0.0005
7.8020	2.4629E-02	0.0004	12.8090	1.8213E-02	0.0004	16.3480	9.9858E-03	0.0005
8.1260	2.4454E-02	0.0004	13.0080	1.7837E-02	0.0004	16.5050	9.5107E-03	0.0005
8.4380	2.4231E-02	0.0004	13.2050	1.7452E-02	0.0004	16.6600	9.0212E-03	0.0005
8.7380	2.3982E-02	0.0004	13.3990	1.7058E-02	0.0004	16.8140	8.5211E-03	0.0005
9.0280	2.3723E-02	0.0004	13.5900	1.6674E-02	0.0004	16.9670	8.0064E-03	0.0006
9.3100	2.3439E-02	0.0004	13.7790	1.6287E-02	0.0004	17.1190	7.4676E-03	0.0006
9.5830	2.3134E-02	0.0004	13.9650	1.5892E-02	0.0004	17.2690	6.9122E-03	0.0006
9.8480	2.2818E-02	0.0004	14.1480	1.5506E-02	0.0004	17.4170	6.3239E-03	0.0006
10.1070	2.2502E-02	0.0004	14.3300	1.5111E-02	0.0004	17.5650	5.7060E-03	0.0006
10.3590	2.2185E-02	0.0004	14.5080	1.4714E-02	0.0004	17.7110	5.0489E-03	0.0006
10.6050	2.1850E-02	0.0004	14.6850	1.4316E-02	0.0004	17.8560	4.3335E-03	0.0007
10.8460	2.1501E-02	0.0004	14.8600	1.3909E-02	0.0004	18.0000	3.5073E-03	0.0007
3.8 (minimum boundary)			z=112.480			to z=112.960		

Table C-3. Radial distributions of fission neutrons (cont)

Radial layer outer boundary (cm)	Layer probability	Rel. error	Radial layer outer boundary (cm)	Layer probability	Rel. error	Radial layer outer boundary (cm)	Layer probability	Rel. error
4.4270	1.9555E-02	0.0005	11.0810	2.1141E-02	0.0004	15.0320	1.3493E-02	0.0004
4.9760	2.2419E-02	0.0005	11.3110	2.0803E-02	0.0004	15.2030	1.3080E-02	0.0004
5.4700	2.3694E-02	0.0005	11.5370	2.0451E-02	0.0004	15.3720	1.2653E-02	0.0005
5.9230	2.4372E-02	0.0004	11.7590	2.0076E-02	0.0004	15.5390	1.2227E-02	0.0005
6.3430	2.4696E-02	0.0004	11.9760	1.9714E-02	0.0004	15.7040	1.1789E-02	0.0005
6.7380	2.4840E-02	0.0004	12.1890	1.9342E-02	0.0004	15.8670	1.1352E-02	0.0005
7.1100	2.4854E-02	0.0004	12.3990	1.8962E-02	0.0004	16.0290	1.0916E-02	0.0005
7.4640	2.4761E-02	0.0004	12.6060	1.8594E-02	0.0004	16.1890	1.0458E-02	0.0005
7.8020	2.4638E-02	0.0004	12.8090	1.8207E-02	0.0004	16.3480	9.9895E-03	0.0005
8.1260	2.4453E-02	0.0004	13.0080	1.7826E-02	0.0004	16.5050	9.5096E-03	0.0005
8.4380	2.4230E-02	0.0004	13.2050	1.7445E-02	0.0004	16.6600	9.0189E-03	0.0005
8.7380	2.3986E-02	0.0004	13.3990	1.7069E-02	0.0004	16.8140	8.5143E-03	0.0005
9.0280	2.3736E-02	0.0004	13.5900	1.6676E-02	0.0004	16.9670	7.9931E-03	0.0006
9.3100	2.3448E-02	0.0004	13.7790	1.6288E-02	0.0004	17.1190	7.4567E-03	0.0006
9.5830	2.3148E-02	0.0004	13.9650	1.5905E-02	0.0004	17.2690	6.9033E-03	0.0006
9.8480	2.2840E-02	0.0004	14.1480	1.5509E-02	0.0004	17.4170	6.3133E-03	0.0006
10.1070	2.2524E-02	0.0004	14.3300	1.5104E-02	0.0004	17.5650	5.6977E-03	0.0006
10.3590	2.2187E-02	0.0004	14.5080	1.4711E-02	0.0004	17.7110	5.0433E-03	0.0006
10.6050	2.1855E-02	0.0004	14.6850	1.4302E-02	0.0004	17.8560	4.3259E-03	0.0007
10.8460	2.1508E-02	0.0004	14.8600	1.3893E-02	0.0004	18.0000	3.5022E-03	0.0007
3.8 (minimum boundary)			z=112.960			to z=113.440		
4.4270	1.9562E-02	0.0005	11.0810	2.1156E-02	0.0004	15.0320	1.3493E-02	0.0004
4.9760	2.2445E-02	0.0005	11.3110	2.0805E-02	0.0004	15.2030	1.3068E-02	0.0004
5.4700	2.3706E-02	0.0005	11.5370	2.0446E-02	0.0004	15.3720	1.2644E-02	0.0005
5.9230	2.4361E-02	0.0004	11.7590	2.0079E-02	0.0004	15.5390	1.2214E-02	0.0005
6.3430	2.4704E-02	0.0004	11.9760	1.9720E-02	0.0004	15.7040	1.1786E-02	0.0005
6.7380	2.4834E-02	0.0004	12.1890	1.9355E-02	0.0004	15.8670	1.1348E-02	0.0005
7.1100	2.4857E-02	0.0004	12.3990	1.8966E-02	0.0004	16.0290	1.0898E-02	0.0005
7.4640	2.4779E-02	0.0004	12.6060	1.8601E-02	0.0004	16.1890	1.0446E-02	0.0005
7.8020	2.4645E-02	0.0004	12.8090	1.8211E-02	0.0004	16.3480	9.9825E-03	0.0005
8.1260	2.4437E-02	0.0004	13.0080	1.7827E-02	0.0004	16.5050	9.4989E-03	0.0005
8.4380	2.4228E-02	0.0004	13.2050	1.7448E-02	0.0004	16.6600	9.0092E-03	0.0005
8.7380	2.3983E-02	0.0004	13.3990	1.7068E-02	0.0004	16.8140	8.5096E-03	0.0005
9.0280	2.3734E-02	0.0004	13.5900	1.6672E-02	0.0004	16.9670	7.9894E-03	0.0006
9.3100	2.3462E-02	0.0004	13.7790	1.6294E-02	0.0004	17.1190	7.4555E-03	0.0006
9.5830	2.3158E-02	0.0004	13.9650	1.5903E-02	0.0004	17.2690	6.9008E-03	0.0006
9.8480	2.2850E-02	0.0004	14.1480	1.5503E-02	0.0004	17.4170	6.3125E-03	0.0006
10.1070	2.2520E-02	0.0004	14.3300	1.5107E-02	0.0004	17.5650	5.6981E-03	0.0006
10.3590	2.2183E-02	0.0004	14.5080	1.4714E-02	0.0004	17.7110	5.0432E-03	0.0006
10.6050	2.1845E-02	0.0004	14.6850	1.4310E-02	0.0004	17.8560	4.3233E-03	0.0007
10.8460	2.1504E-02	0.0004	14.8600	1.3901E-02	0.0004	18.0000	3.4960E-03	0.0007
3.8 (minimum boundary)			z=113.440			to z=113.920		
4.4270	1.9552E-02	0.0005	11.0810	2.1165E-02	0.0004	15.0320	1.3478E-02	0.0004
4.9760	2.2434E-02	0.0005	11.3110	2.0817E-02	0.0004	15.2030	1.3067E-02	0.0004
5.4700	2.3728E-02	0.0005	11.5370	2.0449E-02	0.0004	15.3720	1.2648E-02	0.0004
5.9230	2.4370E-02	0.0004	11.7590	2.0086E-02	0.0004	15.5390	1.2216E-02	0.0005
6.3430	2.4709E-02	0.0004	11.9760	1.9716E-02	0.0004	15.7040	1.1782E-02	0.0005
6.7380	2.4849E-02	0.0004	12.1890	1.9337E-02	0.0004	15.8670	1.1345E-02	0.0005
7.1100	2.4849E-02	0.0004	12.3990	1.8963E-02	0.0004	16.0290	1.0904E-02	0.0005
7.4640	2.4798E-02	0.0004	12.6060	1.8591E-02	0.0004	16.1890	1.0444E-02	0.0005

Table C-3. Radial distributions of fission neutrons (cont)

Radial layer outer boundary (cm)	Layer probability	Rel. error	Radial layer outer boundary (cm)	Layer probability	Rel. error	Radial layer outer boundary (cm)	Layer probability	Rel. error
7.8020	2.4651E-02	0.0004	12.8090	1.8216E-02	0.0004	16.3480	9.9713E-03	0.0005
8.1260	2.4452E-02	0.0004	13.0080	1.7840E-02	0.0004	16.5050	9.4920E-03	0.0005
8.4380	2.4242E-02	0.0004	13.2050	1.7450E-02	0.0004	16.6600	9.0084E-03	0.0005
8.7380	2.4003E-02	0.0004	13.3990	1.7064E-02	0.0004	16.8140	8.5102E-03	0.0005
9.0280	2.3738E-02	0.0004	13.5900	1.6669E-02	0.0004	16.9670	7.9916E-03	0.0005
9.3100	2.3468E-02	0.0004	13.7790	1.6284E-02	0.0004	17.1190	7.4564E-03	0.0006
9.5830	2.3153E-02	0.0004	13.9650	1.5890E-02	0.0004	17.2690	6.8981E-03	0.0006
9.8480	2.2836E-02	0.0004	14.1480	1.5493E-02	0.0004	17.4170	6.3094E-03	0.0006
10.1070	2.2517E-02	0.0004	14.3300	1.5102E-02	0.0004	17.5650	5.6936E-03	0.0006
10.3590	2.2186E-02	0.0004	14.5080	1.4704E-02	0.0004	17.7110	5.0372E-03	0.0006
10.6050	2.1861E-02	0.0004	14.6850	1.4297E-02	0.0004	17.8560	4.3210E-03	0.0007
10.8460	2.1514E-02	0.0004	14.8600	1.3889E-02	0.0004	18.0000	3.4927E-03	0.0007
3.8 (minimum boundary)			z=113.920			to z=114.400		
4.4270	1.9558E-02	0.0005	11.0810	2.1167E-02	0.0004	15.0320	1.3468E-02	0.0004
4.9760	2.2430E-02	0.0005	11.3110	2.0806E-02	0.0004	15.2030	1.3064E-02	0.0004
5.4700	2.3729E-02	0.0005	11.5370	2.0439E-02	0.0004	15.3720	1.2647E-02	0.0004
5.9230	2.4365E-02	0.0004	11.7590	2.0085E-02	0.0004	15.5390	1.2222E-02	0.0005
6.3430	2.4713E-02	0.0004	11.9760	1.9709E-02	0.0004	15.7040	1.1785E-02	0.0005
6.7380	2.4853E-02	0.0004	12.1890	1.9347E-02	0.0004	15.8670	1.1343E-02	0.0005
7.1100	2.4874E-02	0.0004	12.3990	1.8957E-02	0.0004	16.0290	1.0895E-02	0.0005
7.4640	2.4799E-02	0.0004	12.6060	1.8584E-02	0.0004	16.1890	1.0440E-02	0.0005
7.8020	2.4672E-02	0.0004	12.8090	1.8215E-02	0.0004	16.3480	9.9765E-03	0.0005
8.1260	2.4485E-02	0.0004	13.0080	1.7832E-02	0.0004	16.5050	9.4988E-03	0.0005
8.4380	2.4260E-02	0.0004	13.2050	1.7447E-02	0.0004	16.6600	9.0136E-03	0.0005
8.7380	2.4008E-02	0.0004	13.3990	1.7055E-02	0.0004	16.8140	8.5091E-03	0.0005
9.0280	2.3746E-02	0.0004	13.5900	1.6660E-02	0.0004	16.9670	7.9880E-03	0.0005
9.3100	2.3468E-02	0.0004	13.7790	1.6274E-02	0.0004	17.1190	7.4443E-03	0.0006
9.5830	2.3161E-02	0.0004	13.9650	1.5890E-02	0.0004	17.2690	6.8912E-03	0.0006
9.8480	2.2847E-02	0.0004	14.1480	1.5497E-02	0.0004	17.4170	6.3086E-03	0.0006
10.1070	2.2537E-02	0.0004	14.3300	1.5104E-02	0.0004	17.5650	5.6914E-03	0.0006
10.3590	2.2199E-02	0.0004	14.5080	1.4698E-02	0.0004	17.7110	5.0282E-03	0.0006
10.6050	2.1853E-02	0.0004	14.6850	1.4284E-02	0.0004	17.8560	4.3111E-03	0.0007
10.8460	2.1503E-02	0.0004	14.8600	1.3882E-02	0.0004	18.0000	3.4854E-03	0.0007
3.8 (minimum boundary)			z=114.400			to z=114.880		
4.4270	1.9554E-02	0.0005	11.0810	2.1157E-02	0.0004	15.0320	1.3484E-02	0.0004
4.9760	2.2429E-02	0.0005	11.3110	2.0812E-02	0.0004	15.2030	1.3072E-02	0.0004
5.4700	2.3724E-02	0.0005	11.5370	2.0447E-02	0.0004	15.3720	1.2647E-02	0.0004
5.9230	2.4383E-02	0.0004	11.7590	2.0086E-02	0.0004	15.5390	1.2226E-02	0.0005
6.3430	2.4704E-02	0.0004	11.9760	1.9715E-02	0.0004	15.7040	1.1790E-02	0.0005
6.7380	2.4844E-02	0.0004	12.1890	1.9345E-02	0.0004	15.8670	1.1345E-02	0.0005
7.1100	2.4870E-02	0.0004	12.3990	1.8966E-02	0.0004	16.0290	1.0897E-02	0.0005
7.4640	2.4802E-02	0.0004	12.6060	1.8590E-02	0.0004	16.1890	1.0443E-02	0.0005
7.8020	2.4652E-02	0.0004	12.8090	1.8219E-02	0.0004	16.3480	9.9731E-03	0.0005
8.1260	2.4472E-02	0.0004	13.0080	1.7836E-02	0.0004	16.5050	9.4908E-03	0.0005
8.4380	2.4266E-02	0.0004	13.2050	1.7449E-02	0.0004	16.6600	9.0055E-03	0.0005
8.7380	2.4016E-02	0.0004	13.3990	1.7054E-02	0.0004	16.8140	8.5075E-03	0.0005
9.0280	2.3736E-02	0.0004	13.5900	1.6676E-02	0.0004	16.9670	7.9837E-03	0.0005
9.3100	2.3441E-02	0.0004	13.7790	1.6280E-02	0.0004	17.1190	7.4445E-03	0.0006
9.5830	2.3157E-02	0.0004	13.9650	1.5888E-02	0.0004	17.2690	6.8894E-03	0.0006
9.8480	2.2849E-02	0.0004	14.1480	1.5496E-02	0.0004	17.4170	6.3036E-03	0.0006

Table C-3. Radial distributions of fission neutrons (cont)

Radial layer outer boundary (cm)	Layer probability	Rel. error	Radial layer outer boundary (cm)	Layer probability	Rel. error	Radial layer outer boundary (cm)	Layer probability	Rel. error
10.1070	2.2526E-02	0.0004	14.3300	1.5107E-02	0.0004	17.5650	5.6844E-03	0.0006
10.3590	2.2183E-02	0.0004	14.5080	1.4712E-02	0.0004	17.7110	5.0312E-03	0.0006
10.6050	2.1846E-02	0.0004	14.6850	1.4297E-02	0.0004	17.8560	4.3174E-03	0.0007
10.8460	2.1498E-02	0.0004	14.8600	1.3890E-02	0.0004	18.0000	3.4904E-03	0.0007
3.8 (minimum boundary)			z=114.880			to z=115.360		
4.4270	1.9572E-02	0.0005	11.0810	2.1168E-02	0.0004	15.0320	1.3482E-02	0.0004
4.9760	2.2452E-02	0.0005	11.3110	2.0810E-02	0.0004	15.2030	1.3062E-02	0.0004
5.4700	2.3722E-02	0.0005	11.5370	2.0449E-02	0.0004	15.3720	1.2642E-02	0.0004
5.9230	2.4389E-02	0.0004	11.7590	2.0079E-02	0.0004	15.5390	1.2203E-02	0.0005
6.3430	2.4712E-02	0.0004	11.9760	1.9712E-02	0.0004	15.7040	1.1777E-02	0.0005
6.7380	2.4852E-02	0.0004	12.1890	1.9340E-02	0.0004	15.8670	1.1341E-02	0.0005
7.1100	2.4845E-02	0.0004	12.3990	1.8976E-02	0.0004	16.0290	1.0894E-02	0.0005
7.4640	2.4783E-02	0.0004	12.6060	1.8592E-02	0.0004	16.1890	1.0444E-02	0.0005
7.8020	2.4652E-02	0.0004	12.8090	1.8212E-02	0.0004	16.3480	9.9676E-03	0.0005
8.1260	2.4470E-02	0.0004	13.0080	1.7833E-02	0.0004	16.5050	9.4922E-03	0.0005
8.4380	2.4254E-02	0.0004	13.2050	1.7450E-02	0.0004	16.6600	9.0025E-03	0.0005
8.7380	2.4002E-02	0.0004	13.3990	1.7076E-02	0.0004	16.8140	8.4992E-03	0.0005
9.0280	2.3730E-02	0.0004	13.5900	1.6687E-02	0.0004	16.9670	7.9852E-03	0.0005
9.3100	2.3453E-02	0.0004	13.7790	1.6285E-02	0.0004	17.1190	7.4448E-03	0.0006
9.5830	2.3164E-02	0.0004	13.9650	1.5889E-02	0.0004	17.2690	6.8904E-03	0.0006
9.8480	2.2850E-02	0.0004	14.1480	1.5503E-02	0.0004	17.4170	6.3045E-03	0.0006
10.1070	2.2524E-02	0.0004	14.3300	1.5105E-02	0.0004	17.5650	5.6812E-03	0.0006
10.3590	2.2193E-02	0.0004	14.5080	1.4710E-02	0.0004	17.7110	5.0310E-03	0.0006
10.6050	2.1861E-02	0.0004	14.6850	1.4302E-02	0.0004	17.8560	4.3151E-03	0.0007
10.8460	2.1510E-02	0.0004	14.8600	1.3888E-02	0.0004	18.0000	3.4862E-03	0.0007
3.8 (minimum boundary)			z=115.360			to z=115.840		
4.4270	1.9565E-02	0.0005	11.0810	2.1152E-02	0.0004	15.0320	1.3477E-02	0.0004
4.9760	2.2458E-02	0.0005	11.3110	2.0800E-02	0.0004	15.2030	1.3057E-02	0.0004
5.4700	2.3718E-02	0.0005	11.5370	2.0451E-02	0.0004	15.3720	1.2646E-02	0.0004
5.9230	2.4380E-02	0.0004	11.7590	2.0083E-02	0.0004	15.5390	1.2211E-02	0.0005
6.3430	2.4725E-02	0.0004	11.9760	1.9707E-02	0.0004	15.7040	1.1783E-02	0.0005
6.7380	2.4871E-02	0.0004	12.1890	1.9338E-02	0.0004	15.8670	1.1338E-02	0.0005
7.1100	2.4873E-02	0.0004	12.3990	1.8972E-02	0.0004	16.0290	1.0892E-02	0.0005
7.4640	2.4785E-02	0.0004	12.6060	1.8592E-02	0.0004	16.1890	1.0441E-02	0.0005
7.8020	2.4639E-02	0.0004	12.8090	1.8215E-02	0.0004	16.3480	9.9773E-03	0.0005
8.1260	2.4474E-02	0.0004	13.0080	1.7838E-02	0.0004	16.5050	9.4957E-03	0.0005
8.4380	2.4246E-02	0.0004	13.2050	1.7457E-02	0.0004	16.6600	9.0000E-03	0.0005
8.7380	2.4018E-02	0.0004	13.3990	1.7063E-02	0.0004	16.8140	8.4989E-03	0.0005
9.0280	2.3728E-02	0.0004	13.5900	1.6677E-02	0.0004	16.9670	7.9818E-03	0.0005
9.3100	2.3460E-02	0.0004	13.7790	1.6280E-02	0.0004	17.1190	7.4444E-03	0.0006
9.5830	2.3158E-02	0.0004	13.9650	1.5893E-02	0.0004	17.2690	6.8863E-03	0.0006
9.8480	2.2844E-02	0.0004	14.1480	1.5498E-02	0.0004	17.4170	6.3019E-03	0.0006
10.1070	2.2531E-02	0.0004	14.3300	1.5101E-02	0.0004	17.5650	5.6836E-03	0.0006
10.3590	2.2201E-02	0.0004	14.5080	1.4699E-02	0.0004	17.7110	5.0275E-03	0.0006
10.6050	2.1866E-02	0.0004	14.6850	1.4293E-02	0.0004	17.8560	4.3185E-03	0.0007
10.8460	2.1518E-02	0.0004	14.8600	1.3886E-02	0.0004	18.0000	3.4873E-03	0.0007
3.8 (minimum boundary)			z=115.840			to z=116.320		
4.4270	1.9584E-02	0.0005	11.0810	2.1152E-02	0.0004	15.0320	1.3478E-02	0.0004
4.9760	2.2465E-02	0.0005	11.3110	2.0799E-02	0.0004	15.2030	1.3062E-02	0.0004
5.4700	2.3714E-02	0.0005	11.5370	2.0445E-02	0.0004	15.3720	1.2640E-02	0.0004

Table C-3. Radial distributions of fission neutrons (cont)

Radial layer outer boundary (cm)	Layer probability	Rel. error	Radial layer outer boundary (cm)	Layer probability	Rel. error	Radial layer outer boundary (cm)	Layer probability	Rel. error
5.9230	2.4373E-02	0.0004	11.7590	2.0077E-02	0.0004	15.5390	1.2221E-02	0.0005
6.3430	2.4721E-02	0.0004	11.9760	1.9705E-02	0.0004	15.7040	1.1782E-02	0.0005
6.7380	2.4860E-02	0.0004	12.1890	1.9330E-02	0.0004	15.8670	1.1340E-02	0.0005
7.1100	2.4869E-02	0.0004	12.3990	1.8968E-02	0.0004	16.0290	1.0889E-02	0.0005
7.4640	2.4803E-02	0.0004	12.6060	1.8595E-02	0.0004	16.1890	1.0438E-02	0.0005
7.8020	2.4666E-02	0.0004	12.8090	1.8219E-02	0.0004	16.3480	9.9742E-03	0.0005
8.1260	2.4458E-02	0.0004	13.0080	1.7830E-02	0.0004	16.5050	9.4959E-03	0.0005
8.4380	2.4249E-02	0.0004	13.2050	1.7453E-02	0.0004	16.6600	9.0079E-03	0.0005
8.7380	2.4012E-02	0.0004	13.3990	1.7053E-02	0.0004	16.8140	8.5069E-03	0.0005
9.0280	2.3745E-02	0.0004	13.5900	1.6666E-02	0.0004	16.9670	7.9820E-03	0.0005
9.3100	2.3462E-02	0.0004	13.7790	1.6287E-02	0.0004	17.1190	7.4411E-03	0.0006
9.5830	2.3154E-02	0.0004	13.9650	1.5891E-02	0.0004	17.2690	6.8847E-03	0.0006
9.8480	2.2842E-02	0.0004	14.1480	1.5498E-02	0.0004	17.4170	6.3037E-03	0.0006
10.1070	2.2528E-02	0.0004	14.3300	1.5108E-02	0.0004	17.5650	5.6914E-03	0.0006
10.3590	2.2198E-02	0.0004	14.5080	1.4702E-02	0.0004	17.7110	5.0327E-03	0.0006
10.6050	2.1855E-02	0.0004	14.6850	1.4297E-02	0.0004	17.8560	4.3176E-03	0.0007
10.8460	2.1513E-02	0.0004	14.8600	1.3877E-02	0.0004	18.0000	3.4884E-03	0.0007
3.8 (minimum boundary)			z=116.320			to z=116.800		
4.4270	1.9581E-02	0.0005	11.0810	2.1153E-02	0.0004	15.0320	1.3481E-02	0.0004
4.9760	2.2443E-02	0.0005	11.3110	2.0793E-02	0.0004	15.2030	1.3065E-02	0.0004
5.4700	2.3711E-02	0.0005	11.5370	2.0428E-02	0.0004	15.3720	1.2637E-02	0.0004
5.9230	2.4367E-02	0.0004	11.7590	2.0059E-02	0.0004	15.5390	1.2209E-02	0.0005
6.3430	2.4720E-02	0.0004	11.9760	1.9707E-02	0.0004	15.7040	1.1774E-02	0.0005
6.7380	2.4869E-02	0.0004	12.1890	1.9342E-02	0.0004	15.8670	1.1345E-02	0.0005
7.1100	2.4897E-02	0.0004	12.3990	1.8979E-02	0.0004	16.0290	1.0896E-02	0.0005
7.4640	2.4807E-02	0.0004	12.6060	1.8591E-02	0.0004	16.1890	1.0438E-02	0.0005
7.8020	2.4659E-02	0.0004	12.8090	1.8215E-02	0.0004	16.3480	9.9717E-03	0.0005
8.1260	2.4457E-02	0.0004	13.0080	1.7834E-02	0.0004	16.5050	9.4969E-03	0.0005
8.4380	2.4242E-02	0.0004	13.2050	1.7451E-02	0.0004	16.6600	9.0071E-03	0.0005
8.7380	2.4004E-02	0.0004	13.3990	1.7065E-02	0.0004	16.8140	8.5030E-03	0.0005
9.0280	2.3737E-02	0.0004	13.5900	1.6690E-02	0.0004	16.9670	7.9833E-03	0.0005
9.3100	2.3459E-02	0.0004	13.7790	1.6294E-02	0.0004	17.1190	7.4430E-03	0.0006
9.5830	2.3164E-02	0.0004	13.9650	1.5899E-02	0.0004	17.2690	6.8909E-03	0.0006
9.8480	2.2844E-02	0.0004	14.1480	1.5505E-02	0.0004	17.4170	6.3044E-03	0.0006
10.1070	2.2515E-02	0.0004	14.3300	1.5122E-02	0.0004	17.5650	5.6850E-03	0.0006
10.3590	2.2185E-02	0.0004	14.5080	1.4714E-02	0.0004	17.7110	5.0303E-03	0.0006
10.6050	2.1844E-02	0.0004	14.6850	1.4302E-02	0.0004	17.8560	4.3213E-03	0.0007
10.8460	2.1493E-02	0.0004	14.8600	1.3888E-02	0.0004	18.0000	3.4903E-03	0.0007
3.8 (minimum boundary)			z=116.800			to z=117.280		
4.4270	1.9572E-02	0.0005	11.0810	2.1151E-02	0.0004	15.0320	1.3480E-02	0.0004
4.9760	2.2447E-02	0.0005	11.3110	2.0784E-02	0.0004	15.2030	1.3068E-02	0.0004
5.4700	2.3713E-02	0.0005	11.5370	2.0436E-02	0.0004	15.3720	1.2638E-02	0.0004
5.9230	2.4373E-02	0.0004	11.7590	2.0077E-02	0.0004	15.5390	1.2207E-02	0.0005
6.3430	2.4697E-02	0.0004	11.9760	1.9712E-02	0.0004	15.7040	1.1772E-02	0.0005
6.7380	2.4876E-02	0.0004	12.1890	1.9348E-02	0.0004	15.8670	1.1335E-02	0.0005
7.1100	2.4877E-02	0.0004	12.3990	1.8970E-02	0.0004	16.0290	1.0897E-02	0.0005
7.4640	2.4794E-02	0.0004	12.6060	1.8593E-02	0.0004	16.1890	1.0440E-02	0.0005
7.8020	2.4667E-02	0.0004	12.8090	1.8214E-02	0.0004	16.3480	9.9641E-03	0.0005
8.1260	2.4482E-02	0.0004	13.0080	1.7830E-02	0.0004	16.5050	9.4889E-03	0.0005
8.4380	2.4259E-02	0.0004	13.2050	1.7452E-02	0.0004	16.6600	9.0015E-03	0.0005

Table C-3. Radial distributions of fission neutrons (cont)

Radial layer outer boundary (cm)	Layer probability	Rel. error	Radial layer outer boundary (cm)	Layer probability	Rel. error	Radial layer outer boundary (cm)	Layer probability	Rel. error
8.7380	2.4010E-02	0.0004	13.3990	1.7078E-02	0.0004	16.8140	8.5071E-03	0.0005
9.0280	2.3749E-02	0.0004	13.5900	1.6685E-02	0.0004	16.9670	7.9848E-03	0.0005
9.3100	2.3461E-02	0.0004	13.7790	1.6297E-02	0.0004	17.1190	7.4462E-03	0.0006
9.5830	2.3178E-02	0.0004	13.9650	1.5904E-02	0.0004	17.2690	6.8906E-03	0.0006
9.8480	2.2843E-02	0.0004	14.1480	1.5502E-02	0.0004	17.4170	6.3012E-03	0.0006
10.1070	2.2508E-02	0.0004	14.3300	1.5111E-02	0.0004	17.5650	5.6850E-03	0.0006
10.3590	2.2178E-02	0.0004	14.5080	1.4705E-02	0.0004	17.7110	5.0288E-03	0.0006
10.6050	2.1838E-02	0.0004	14.6850	1.4295E-02	0.0004	17.8560	4.3195E-03	0.0007
10.8460	2.1493E-02	0.0004	14.8600	1.3892E-02	0.0004	18.0000	3.4909E-03	0.0007
3.8 (minimum boundary)			z=117.280			to z=117.760		
4.4270	1.9562E-02	0.0005	11.0810	2.1154E-02	0.0004	15.0320	1.3476E-02	0.0004
4.9760	2.2440E-02	0.0005	11.3110	2.0799E-02	0.0004	15.2030	1.3063E-02	0.0004
5.4700	2.3710E-02	0.0005	11.5370	2.0430E-02	0.0004	15.3720	1.2646E-02	0.0004
5.9230	2.4380E-02	0.0004	11.7590	2.0065E-02	0.0004	15.5390	1.2212E-02	0.0005
6.3430	2.4706E-02	0.0004	11.9760	1.9698E-02	0.0004	15.7040	1.1782E-02	0.0005
6.7380	2.4856E-02	0.0004	12.1890	1.9340E-02	0.0004	15.8670	1.1338E-02	0.0005
7.1100	2.4867E-02	0.0004	12.3990	1.8963E-02	0.0004	16.0290	1.0891E-02	0.0005
7.4640	2.4787E-02	0.0004	12.6060	1.8592E-02	0.0004	16.1890	1.0440E-02	0.0005
7.8020	2.4656E-02	0.0004	12.8090	1.8209E-02	0.0004	16.3480	9.9735E-03	0.0005
8.1260	2.4468E-02	0.0004	13.0080	1.7838E-02	0.0004	16.5050	9.4976E-03	0.0005
8.4380	2.4252E-02	0.0004	13.2050	1.7455E-02	0.0004	16.6600	9.0160E-03	0.0005
8.7380	2.4008E-02	0.0004	13.3990	1.7078E-02	0.0004	16.8140	8.5186E-03	0.0005
9.0280	2.3749E-02	0.0004	13.5900	1.6684E-02	0.0004	16.9670	7.9934E-03	0.0005
9.3100	2.3465E-02	0.0004	13.7790	1.6298E-02	0.0004	17.1190	7.4539E-03	0.0006
9.5830	2.3174E-02	0.0004	13.9650	1.5904E-02	0.0004	17.2690	6.9003E-03	0.0006
9.8480	2.2842E-02	0.0004	14.1480	1.5506E-02	0.0004	17.4170	6.3094E-03	0.0006
10.1070	2.2513E-02	0.0004	14.3300	1.5107E-02	0.0004	17.5650	5.6897E-03	0.0006
10.3590	2.2179E-02	0.0004	14.5080	1.4702E-02	0.0004	17.7110	5.0285E-03	0.0006
10.6050	2.1838E-02	0.0004	14.6850	1.4298E-02	0.0004	17.8560	4.3205E-03	0.0007
10.8460	2.1495E-02	0.0004	14.8600	1.3889E-02	0.0004	18.0000	3.4932E-03	0.0007
3.8 (minimum boundary)			z=117.760			to z=118.240		
4.4270	1.9561E-02	0.0005	11.0810	2.1154E-02	0.0004	15.0320	1.3485E-02	0.0004
4.9760	2.2430E-02	0.0005	11.3110	2.0810E-02	0.0004	15.2030	1.3068E-02	0.0004
5.4700	2.3716E-02	0.0005	11.5370	2.0450E-02	0.0004	15.3720	1.2644E-02	0.0004
5.9230	2.4378E-02	0.0004	11.7590	2.0077E-02	0.0004	15.5390	1.2219E-02	0.0005
6.3430	2.4703E-02	0.0004	11.9760	1.9709E-02	0.0004	15.7040	1.1786E-02	0.0005
6.7380	2.4842E-02	0.0004	12.1890	1.9331E-02	0.0004	15.8670	1.1346E-02	0.0005
7.1100	2.4855E-02	0.0004	12.3990	1.8968E-02	0.0004	16.0290	1.0903E-02	0.0005
7.4640	2.4785E-02	0.0004	12.6060	1.8596E-02	0.0004	16.1890	1.0444E-02	0.0005
7.8020	2.4649E-02	0.0004	12.8090	1.8211E-02	0.0004	16.3480	9.9805E-03	0.0005
8.1260	2.4454E-02	0.0004	13.0080	1.7840E-02	0.0004	16.5050	9.5093E-03	0.0005
8.4380	2.4247E-02	0.0004	13.2050	1.7449E-02	0.0004	16.6600	9.0182E-03	0.0005
8.7380	2.3997E-02	0.0004	13.3990	1.7064E-02	0.0004	16.8140	8.5124E-03	0.0005
9.0280	2.3742E-02	0.0004	13.5900	1.6679E-02	0.0004	16.9670	7.9899E-03	0.0005
9.3100	2.3445E-02	0.0004	13.7790	1.6300E-02	0.0004	17.1190	7.4542E-03	0.0006
9.5830	2.3156E-02	0.0004	13.9650	1.5908E-02	0.0004	17.2690	6.8954E-03	0.0006
9.8480	2.2844E-02	0.0004	14.1480	1.5500E-02	0.0004	17.4170	6.3078E-03	0.0006
10.1070	2.2517E-02	0.0004	14.3300	1.5097E-02	0.0004	17.5650	5.6930E-03	0.0006
10.3590	2.2181E-02	0.0004	14.5080	1.4698E-02	0.0004	17.7110	5.0351E-03	0.0006
10.6050	2.1846E-02	0.0004	14.6850	1.4298E-02	0.0004	17.8560	4.3185E-03	0.0007

Table C-3. Radial distributions of fission neutrons (cont)

Radial layer outer boundary (cm)	Layer probability	Rel. error	Radial layer outer boundary (cm)	Layer probability	Rel. error	Radial layer outer boundary (cm)	Layer probability	Rel. error
10.8460	2.1516E-02	0.0004	14.8600	1.3895E-02	0.0004	18.0000	3.4931E-03	0.0007
3.8 (minimum boundary)			z=118.240			to z=118.720		
4.4270	1.9542E-02	0.0005	11.0810	2.1154E-02	0.0004	15.0320	1.3485E-02	0.0004
4.9760	2.2419E-02	0.0005	11.3110	2.0819E-02	0.0004	15.2030	1.3073E-02	0.0004
5.4700	2.3709E-02	0.0005	11.5370	2.0451E-02	0.0004	15.3720	1.2650E-02	0.0004
5.9230	2.4379E-02	0.0004	11.7590	2.0082E-02	0.0004	15.5390	1.2220E-02	0.0005
6.3430	2.4700E-02	0.0004	11.9760	1.9706E-02	0.0004	15.7040	1.1790E-02	0.0005
6.7380	2.4826E-02	0.0004	12.1890	1.9339E-02	0.0004	15.8670	1.1346E-02	0.0005
7.1100	2.4848E-02	0.0004	12.3990	1.8978E-02	0.0004	16.0290	1.0905E-02	0.0005
7.4640	2.4768E-02	0.0004	12.6060	1.8592E-02	0.0004	16.1890	1.0455E-02	0.0005
7.8020	2.4626E-02	0.0004	12.8090	1.8218E-02	0.0004	16.3480	9.9881E-03	0.0005
8.1260	2.4451E-02	0.0004	13.0080	1.7839E-02	0.0004	16.5050	9.5114E-03	0.0005
8.4380	2.4255E-02	0.0004	13.2050	1.7452E-02	0.0004	16.6600	9.0222E-03	0.0005
8.7380	2.4012E-02	0.0004	13.3990	1.7052E-02	0.0004	16.8140	8.5162E-03	0.0005
9.0280	2.3723E-02	0.0004	13.5900	1.6670E-02	0.0004	16.9670	7.9967E-03	0.0005
9.3100	2.3450E-02	0.0004	13.7790	1.6301E-02	0.0004	17.1190	7.4613E-03	0.0006
9.5830	2.3154E-02	0.0004	13.9650	1.5899E-02	0.0004	17.2690	6.9082E-03	0.0006
9.8480	2.2839E-02	0.0004	14.1480	1.5505E-02	0.0004	17.4170	6.3191E-03	0.0006
10.1070	2.2522E-02	0.0004	14.3300	1.5094E-02	0.0004	17.5650	5.6911E-03	0.0006
10.3590	2.2173E-02	0.0004	14.5080	1.4707E-02	0.0004	17.7110	5.0382E-03	0.0006
10.6050	2.1840E-02	0.0004	14.6850	1.4307E-02	0.0004	17.8560	4.3224E-03	0.0007
10.8460	2.1506E-02	0.0004	14.8600	1.3897E-02	0.0004	18.0000	3.4979E-03	0.0007
3.8 (minimum boundary)			z=118.720			to z=119.200		
4.4270	1.9537E-02	0.0005	11.0810	2.1147E-02	0.0004	15.0320	1.3491E-02	0.0004
4.9760	2.2407E-02	0.0005	11.3110	2.0815E-02	0.0004	15.2030	1.3077E-02	0.0004
5.4700	2.3695E-02	0.0005	11.5370	2.0443E-02	0.0004	15.3720	1.2663E-02	0.0004
5.9230	2.4348E-02	0.0004	11.7590	2.0087E-02	0.0004	15.5390	1.2234E-02	0.0005
6.3430	2.4687E-02	0.0004	11.9760	1.9712E-02	0.0004	15.7040	1.1804E-02	0.0005
6.7380	2.4836E-02	0.0004	12.1890	1.9343E-02	0.0004	15.8670	1.1364E-02	0.0005
7.1100	2.4847E-02	0.0004	12.3990	1.8975E-02	0.0004	16.0290	1.0917E-02	0.0005
7.4640	2.4764E-02	0.0004	12.6060	1.8583E-02	0.0004	16.1890	1.0455E-02	0.0005
7.8020	2.4605E-02	0.0004	12.8090	1.8208E-02	0.0004	16.3480	9.9927E-03	0.0005
8.1260	2.4451E-02	0.0004	13.0080	1.7824E-02	0.0004	16.5050	9.5132E-03	0.0005
8.4380	2.4247E-02	0.0004	13.2050	1.7444E-02	0.0004	16.6600	9.0233E-03	0.0005
8.7380	2.3993E-02	0.0004	13.3990	1.7055E-02	0.0004	16.8140	8.5216E-03	0.0005
9.0280	2.3734E-02	0.0004	13.5900	1.6684E-02	0.0004	16.9670	8.0041E-03	0.0005
9.3100	2.3444E-02	0.0004	13.7790	1.6295E-02	0.0004	17.1190	7.4643E-03	0.0006
9.5830	2.3143E-02	0.0004	13.9650	1.5904E-02	0.0004	17.2690	6.9095E-03	0.0006
9.8480	2.2834E-02	0.0004	14.1480	1.5512E-02	0.0004	17.4170	6.3213E-03	0.0006
10.1070	2.2502E-02	0.0004	14.3300	1.5120E-02	0.0004	17.5650	5.7019E-03	0.0006
10.3590	2.2168E-02	0.0004	14.5080	1.4722E-02	0.0004	17.7110	5.0447E-03	0.0006
10.6050	2.1840E-02	0.0004	14.6850	1.4310E-02	0.0004	17.8560	4.3280E-03	0.0007
10.8460	2.1500E-02	0.0004	14.8600	1.3903E-02	0.0004	18.0000	3.5031E-03	0.0007
3.8 (minimum boundary)			z=119.200			to z=119.680		
4.4270	1.9552E-02	0.0005	11.0810	2.1141E-02	0.0004	15.0320	1.3498E-02	0.0004
4.9760	2.2416E-02	0.0005	11.3110	2.0794E-02	0.0004	15.2030	1.3082E-02	0.0004
5.4700	2.3693E-02	0.0005	11.5370	2.0439E-02	0.0004	15.3720	1.2658E-02	0.0005
5.9230	2.4336E-02	0.0004	11.7590	2.0076E-02	0.0004	15.5390	1.2236E-02	0.0005
6.3430	2.4679E-02	0.0004	11.9760	1.9706E-02	0.0004	15.7040	1.1805E-02	0.0005
6.7380	2.4835E-02	0.0004	12.1890	1.9332E-02	0.0004	15.8670	1.1371E-02	0.0005

Table C-3. Radial distributions of fission neutrons (cont)

Radial layer outer boundary (cm)	Layer probability	Rel. error	Radial layer outer boundary (cm)	Layer probability	Rel. error	Radial layer outer boundary (cm)	Layer probability	Rel. error
7.1100	2.4834E-02	0.0004	12.3990	1.8960E-02	0.0004	16.0290	1.0923E-02	0.0005
7.4640	2.4755E-02	0.0004	12.6060	1.8589E-02	0.0004	16.1890	1.0464E-02	0.0005
7.8020	2.4619E-02	0.0004	12.8090	1.8217E-02	0.0004	16.3480	9.9916E-03	0.0005
8.1260	2.4435E-02	0.0004	13.0080	1.7839E-02	0.0004	16.5050	9.5077E-03	0.0005
8.4380	2.4242E-02	0.0004	13.2050	1.7457E-02	0.0004	16.6600	9.0209E-03	0.0005
8.7380	2.3994E-02	0.0004	13.3990	1.7067E-02	0.0004	16.8140	8.5299E-03	0.0005
9.0280	2.3727E-02	0.0004	13.5900	1.6686E-02	0.0004	16.9670	8.0086E-03	0.0006
9.3100	2.3440E-02	0.0004	13.7790	1.6290E-02	0.0004	17.1190	7.4667E-03	0.0006
9.5830	2.3144E-02	0.0004	13.9650	1.5903E-02	0.0004	17.2690	6.9056E-03	0.0006
9.8480	2.2832E-02	0.0004	14.1480	1.5512E-02	0.0004	17.4170	6.3185E-03	0.0006
10.1070	2.2514E-02	0.0004	14.3300	1.5122E-02	0.0004	17.5650	5.7059E-03	0.0006
10.3590	2.2175E-02	0.0004	14.5080	1.4722E-02	0.0004	17.7110	5.0538E-03	0.0006
10.6050	2.1834E-02	0.0004	14.6850	1.4307E-02	0.0004	17.8560	4.3360E-03	0.0007
10.8460	2.1494E-02	0.0004	14.8600	1.3900E-02	0.0004	18.0000	3.5088E-03	0.0007
3.8 (minimum boundary)			z=119.680			to z=120.160		
4.4270	1.9544E-02	0.0005	11.0810	2.1149E-02	0.0004	15.0320	1.3492E-02	0.0004
4.9760	2.2413E-02	0.0005	11.3110	2.0793E-02	0.0004	15.2030	1.3081E-02	0.0004
5.4700	2.3673E-02	0.0005	11.5370	2.0413E-02	0.0004	15.3720	1.2665E-02	0.0005
5.9230	2.4357E-02	0.0004	11.7590	2.0074E-02	0.0004	15.5390	1.2249E-02	0.0005
6.3430	2.4694E-02	0.0004	11.9760	1.9696E-02	0.0004	15.7040	1.1813E-02	0.0005
6.7380	2.4821E-02	0.0004	12.1890	1.9346E-02	0.0004	15.8670	1.1374E-02	0.0005
7.1100	2.4823E-02	0.0004	12.3990	1.8961E-02	0.0004	16.0290	1.0923E-02	0.0005
7.4640	2.4747E-02	0.0004	12.6060	1.8583E-02	0.0004	16.1890	1.0471E-02	0.0005
7.8020	2.4616E-02	0.0004	12.8090	1.8209E-02	0.0004	16.3480	1.0009E-02	0.0005
8.1260	2.4443E-02	0.0004	13.0080	1.7822E-02	0.0004	16.5050	9.5250E-03	0.0005
8.4380	2.4238E-02	0.0004	13.2050	1.7444E-02	0.0004	16.6600	9.0365E-03	0.0005
8.7380	2.3991E-02	0.0004	13.3990	1.7068E-02	0.0004	16.8140	8.5310E-03	0.0005
9.0280	2.3705E-02	0.0004	13.5900	1.6682E-02	0.0004	16.9670	8.0138E-03	0.0006
9.3100	2.3429E-02	0.0004	13.7790	1.6294E-02	0.0004	17.1190	7.4724E-03	0.0006
9.5830	2.3134E-02	0.0004	13.9650	1.5908E-02	0.0004	17.2690	6.9088E-03	0.0006
9.8480	2.2821E-02	0.0004	14.1480	1.5519E-02	0.0004	17.4170	6.3290E-03	0.0006
10.1070	2.2512E-02	0.0004	14.3300	1.5123E-02	0.0004	17.5650	5.7093E-03	0.0006
10.3590	2.2172E-02	0.0004	14.5080	1.4720E-02	0.0004	17.7110	5.0545E-03	0.0006
10.6050	2.1832E-02	0.0004	14.6850	1.4321E-02	0.0004	17.8560	4.3405E-03	0.0007
10.8460	2.1495E-02	0.0004	14.8600	1.3903E-02	0.0004	18.0000	3.5151E-03	0.0007
3.8 (minimum boundary)			z=120.160			to z=120.640		
4.4270	1.9531E-02	0.0005	11.0810	2.1139E-02	0.0004	15.0320	1.3505E-02	0.0004
4.9760	2.2409E-02	0.0005	11.3110	2.0779E-02	0.0004	15.2030	1.3082E-02	0.0004
5.4700	2.3681E-02	0.0005	11.5370	2.0413E-02	0.0004	15.3720	1.2668E-02	0.0005
5.9230	2.4350E-02	0.0004	11.7590	2.0055E-02	0.0004	15.5390	1.2243E-02	0.0005
6.3430	2.4688E-02	0.0004	11.9760	1.9708E-02	0.0004	15.7040	1.1804E-02	0.0005
6.7380	2.4817E-02	0.0004	12.1890	1.9339E-02	0.0004	15.8670	1.1364E-02	0.0005
7.1100	2.4829E-02	0.0004	12.3990	1.8956E-02	0.0004	16.0290	1.0928E-02	0.0005
7.4640	2.4744E-02	0.0004	12.6060	1.8582E-02	0.0004	16.1890	1.0473E-02	0.0005
7.8020	2.4617E-02	0.0004	12.8090	1.8202E-02	0.0004	16.3480	1.0006E-02	0.0005
8.1260	2.4435E-02	0.0004	13.0080	1.7831E-02	0.0004	16.5050	9.5359E-03	0.0005
8.4380	2.4228E-02	0.0004	13.2050	1.7450E-02	0.0004	16.6600	9.0420E-03	0.0005
8.7380	2.3980E-02	0.0004	13.3990	1.7065E-02	0.0004	16.8140	8.5410E-03	0.0005
9.0280	2.3705E-02	0.0004	13.5900	1.6674E-02	0.0004	16.9670	8.0251E-03	0.0006
9.3100	2.3424E-02	0.0004	13.7790	1.6288E-02	0.0004	17.1190	7.4836E-03	0.0006

Table C-3. Radial distributions of fission neutrons (cont)

Radial layer outer boundary (cm)	Layer probability	Rel. error	Radial layer outer boundary (cm)	Layer probability	Rel. error	Radial layer outer boundary (cm)	Layer probability	Rel. error
9.5830	2.3122E-02	0.0004	13.9650	1.5898E-02	0.0004	17.2690	6.9258E-03	0.0006
9.8480	2.2823E-02	0.0004	14.1480	1.5501E-02	0.0004	17.4170	6.3415E-03	0.0006
10.1070	2.2495E-02	0.0004	14.3300	1.5128E-02	0.0004	17.5650	5.7288E-03	0.0006
10.3590	2.2167E-02	0.0004	14.5080	1.4723E-02	0.0004	17.7110	5.0683E-03	0.0006
10.6050	2.1838E-02	0.0004	14.6850	1.4324E-02	0.0004	17.8560	4.3515E-03	0.0007
10.8460	2.1496E-02	0.0004	14.8600	1.3920E-02	0.0004	18.0000	3.5277E-03	0.0007
3.8 (minimum boundary)			z=120.640			to z=121.120		
4.4270	1.9524E-02	0.0005	11.0810	2.1126E-02	0.0004	15.0320	1.3503E-02	0.0004
4.9760	2.2392E-02	0.0005	11.3110	2.0770E-02	0.0004	15.2030	1.3092E-02	0.0005
5.4700	2.3658E-02	0.0005	11.5370	2.0424E-02	0.0004	15.3720	1.2670E-02	0.0005
5.9230	2.4339E-02	0.0005	11.7590	2.0059E-02	0.0004	15.5390	1.2245E-02	0.0005
6.3430	2.4671E-02	0.0004	11.9760	1.9696E-02	0.0004	15.7040	1.1817E-02	0.0005
6.7380	2.4805E-02	0.0004	12.1890	1.9341E-02	0.0004	15.8670	1.1374E-02	0.0005
7.1100	2.4825E-02	0.0004	12.3990	1.8958E-02	0.0004	16.0290	1.0932E-02	0.0005
7.4640	2.4754E-02	0.0004	12.6060	1.8581E-02	0.0004	16.1890	1.0473E-02	0.0005
7.8020	2.4616E-02	0.0004	12.8090	1.8211E-02	0.0004	16.3480	1.0012E-02	0.0005
8.1260	2.4441E-02	0.0004	13.0080	1.7834E-02	0.0004	16.5050	9.5436E-03	0.0005
8.4380	2.4216E-02	0.0004	13.2050	1.7458E-02	0.0004	16.6600	9.0569E-03	0.0005
8.7380	2.3975E-02	0.0004	13.3990	1.7062E-02	0.0004	16.8140	8.5526E-03	0.0005
9.0280	2.3700E-02	0.0004	13.5900	1.6680E-02	0.0004	16.9670	8.0280E-03	0.0006
9.3100	2.3417E-02	0.0004	13.7790	1.6289E-02	0.0004	17.1190	7.4948E-03	0.0006
9.5830	2.3119E-02	0.0004	13.9650	1.5896E-02	0.0004	17.2690	6.9341E-03	0.0006
9.8480	2.2822E-02	0.0004	14.1480	1.5510E-02	0.0004	17.4170	6.3478E-03	0.0006
10.1070	2.2482E-02	0.0004	14.3300	1.5121E-02	0.0004	17.5650	5.7365E-03	0.0006
10.3590	2.2162E-02	0.0004	14.5080	1.4721E-02	0.0004	17.7110	5.0859E-03	0.0006
10.6050	2.1828E-02	0.0004	14.6850	1.4316E-02	0.0004	17.8560	4.3666E-03	0.0007
10.8460	2.1483E-02	0.0004	14.8600	1.3914E-02	0.0004	18.0000	3.5368E-03	0.0007
3.8 (minimum boundary)			z=121.120			to z=121.600		
4.4270	1.9517E-02	0.0005	11.0810	2.1125E-02	0.0004	15.0320	1.3507E-02	0.0004
4.9760	2.2389E-02	0.0005	11.3110	2.0779E-02	0.0004	15.2030	1.3099E-02	0.0005
5.4700	2.3686E-02	0.0005	11.5370	2.0425E-02	0.0004	15.3720	1.2682E-02	0.0005
5.9230	2.4331E-02	0.0005	11.7590	2.0064E-02	0.0004	15.5390	1.2257E-02	0.0005
6.3430	2.4645E-02	0.0004	11.9760	1.9698E-02	0.0004	15.7040	1.1825E-02	0.0005
6.7380	2.4795E-02	0.0004	12.1890	1.9332E-02	0.0004	15.8670	1.1382E-02	0.0005
7.1100	2.4813E-02	0.0004	12.3990	1.8975E-02	0.0004	16.0290	1.0945E-02	0.0005
7.4640	2.4740E-02	0.0004	12.6060	1.8587E-02	0.0004	16.1890	1.0487E-02	0.0005
7.8020	2.4593E-02	0.0004	12.8090	1.8214E-02	0.0004	16.3480	1.0026E-02	0.0005
8.1260	2.4402E-02	0.0004	13.0080	1.7833E-02	0.0004	16.5050	9.5454E-03	0.0005
8.4380	2.4188E-02	0.0004	13.2050	1.7450E-02	0.0004	16.6600	9.0595E-03	0.0005
8.7380	2.3951E-02	0.0004	13.3990	1.7073E-02	0.0004	16.8140	8.5608E-03	0.0005
9.0280	2.3687E-02	0.0004	13.5900	1.6683E-02	0.0004	16.9670	8.0497E-03	0.0006
9.3100	2.3409E-02	0.0004	13.7790	1.6290E-02	0.0004	17.1190	7.5088E-03	0.0006
9.5830	2.3098E-02	0.0004	13.9650	1.5898E-02	0.0004	17.2690	6.9497E-03	0.0006
9.8480	2.2803E-02	0.0004	14.1480	1.5517E-02	0.0004	17.4170	6.3601E-03	0.0006
10.1070	2.2477E-02	0.0004	14.3300	1.5118E-02	0.0004	17.5650	5.7431E-03	0.0006
10.3590	2.2148E-02	0.0004	14.5080	1.4728E-02	0.0004	17.7110	5.0903E-03	0.0006
10.6050	2.1810E-02	0.0004	14.6850	1.4323E-02	0.0004	17.8560	4.3717E-03	0.0007
10.8460	2.1484E-02	0.0004	14.8600	1.3927E-02	0.0004	18.0000	3.5453E-03	0.0007
3.8 (minimum boundary)			z=121.600			to z=122.080		
4.4270	1.9540E-02	0.0005	11.0810	2.1110E-02	0.0004	15.0320	1.3517E-02	0.0005

Table C-3. Radial distributions of fission neutrons (cont)

Radial layer outer boundary (cm)	Layer probability	Rel. error	Radial layer outer boundary (cm)	Layer probability	Rel. error	Radial layer outer boundary (cm)	Layer probability	Rel. error
4.9760	2.2379E-02	0.0005	11.3110	2.0772E-02	0.0004	15.2030	1.3101E-02	0.0005
5.4700	2.3649E-02	0.0005	11.5370	2.0422E-02	0.0004	15.3720	1.2681E-02	0.0005
5.9230	2.4310E-02	0.0005	11.7590	2.0060E-02	0.0004	15.5390	1.2255E-02	0.0005
6.3430	2.4649E-02	0.0004	11.9760	1.9701E-02	0.0004	15.7040	1.1829E-02	0.0005
6.7380	2.4795E-02	0.0004	12.1890	1.9328E-02	0.0004	15.8670	1.1398E-02	0.0005
7.1100	2.4804E-02	0.0004	12.3990	1.8959E-02	0.0004	16.0290	1.0954E-02	0.0005
7.4640	2.4701E-02	0.0004	12.6060	1.8590E-02	0.0004	16.1890	1.0494E-02	0.0005
7.8020	2.4574E-02	0.0004	12.8090	1.8219E-02	0.0004	16.3480	1.0027E-02	0.0005
8.1260	2.4395E-02	0.0004	13.0080	1.7835E-02	0.0004	16.5050	9.5546E-03	0.0005
8.4380	2.4174E-02	0.0004	13.2050	1.7462E-02	0.0004	16.6600	9.0716E-03	0.0005
8.7380	2.3942E-02	0.0004	13.3990	1.7076E-02	0.0004	16.8140	8.5708E-03	0.0006
9.0280	2.3668E-02	0.0004	13.5900	1.6697E-02	0.0004	16.9670	8.0507E-03	0.0006
9.3100	2.3387E-02	0.0004	13.7790	1.6307E-02	0.0004	17.1190	7.5181E-03	0.0006
9.5830	2.3113E-02	0.0004	13.9650	1.5915E-02	0.0004	17.2690	6.9573E-03	0.0006
9.8480	2.2807E-02	0.0004	14.1480	1.5531E-02	0.0004	17.4170	6.3688E-03	0.0006
10.1070	2.2471E-02	0.0004	14.3300	1.5127E-02	0.0004	17.5650	5.7546E-03	0.0006
10.3590	2.2149E-02	0.0004	14.5080	1.4731E-02	0.0004	17.7110	5.0976E-03	0.0007
10.6050	2.1814E-02	0.0004	14.6850	1.4331E-02	0.0004	17.8560	4.3795E-03	0.0007
10.8460	2.1452E-02	0.0004	14.8600	1.3920E-02	0.0004	18.0000	3.5521E-03	0.0007
3.8 (minimum boundary)			z=122.080			to z=122.560		
4.4270	1.9537E-02	0.0005	11.0810	2.1108E-02	0.0004	15.0320	1.3518E-02	0.0005
4.9760	2.2382E-02	0.0005	11.3110	2.0748E-02	0.0004	15.2030	1.3109E-02	0.0005
5.4700	2.3654E-02	0.0005	11.5370	2.0409E-02	0.0004	15.3720	1.2685E-02	0.0005
5.9230	2.4303E-02	0.0005	11.7590	2.0058E-02	0.0004	15.5390	1.2271E-02	0.0005
6.3430	2.4624E-02	0.0004	11.9760	1.9698E-02	0.0004	15.7040	1.1840E-02	0.0005
6.7380	2.4795E-02	0.0004	12.1890	1.9320E-02	0.0004	15.8670	1.1400E-02	0.0005
7.1100	2.4792E-02	0.0004	12.3990	1.8945E-02	0.0004	16.0290	1.0963E-02	0.0005
7.4640	2.4710E-02	0.0004	12.6060	1.8577E-02	0.0004	16.1890	1.0505E-02	0.0005
7.8020	2.4570E-02	0.0004	12.8090	1.8221E-02	0.0004	16.3480	1.0041E-02	0.0005
8.1260	2.4395E-02	0.0004	13.0080	1.7855E-02	0.0004	16.5050	9.5614E-03	0.0005
8.4380	2.4168E-02	0.0004	13.2050	1.7459E-02	0.0004	16.6600	9.0765E-03	0.0005
8.7380	2.3919E-02	0.0004	13.3990	1.7079E-02	0.0004	16.8140	8.5772E-03	0.0006
9.0280	2.3659E-02	0.0004	13.5900	1.6693E-02	0.0004	16.9670	8.0623E-03	0.0006
9.3100	2.3372E-02	0.0004	13.7790	1.6305E-02	0.0004	17.1190	7.5342E-03	0.0006
9.5830	2.3085E-02	0.0004	13.9650	1.5919E-02	0.0004	17.2690	6.9713E-03	0.0006
9.8480	2.2785E-02	0.0004	14.1480	1.5526E-02	0.0004	17.4170	6.3829E-03	0.0006
10.1070	2.2459E-02	0.0004	14.3300	1.5132E-02	0.0004	17.5650	5.7669E-03	0.0006
10.3590	2.2132E-02	0.0004	14.5080	1.4747E-02	0.0004	17.7110	5.1062E-03	0.0007
10.6050	2.1797E-02	0.0004	14.6850	1.4341E-02	0.0004	17.8560	4.3891E-03	0.0007
10.8460	2.1460E-02	0.0004	14.8600	1.3939E-02	0.0004	18.0000	3.5603E-03	0.0007
3.8 (minimum boundary)			z=122.560			to z=123.040		
4.4270	1.9519E-02	0.0005	11.0810	2.1105E-02	0.0004	15.0320	1.3521E-02	0.0005
4.9760	2.2367E-02	0.0005	11.3110	2.0748E-02	0.0004	15.2030	1.3112E-02	0.0005
5.4700	2.3655E-02	0.0005	11.5370	2.0398E-02	0.0004	15.3720	1.2702E-02	0.0005
5.9230	2.4307E-02	0.0005	11.7590	2.0044E-02	0.0004	15.5390	1.2278E-02	0.0005
6.3430	2.4630E-02	0.0005	11.9760	1.9686E-02	0.0004	15.7040	1.1849E-02	0.0005
6.7380	2.4775E-02	0.0004	12.1890	1.9333E-02	0.0004	15.8670	1.1422E-02	0.0005
7.1100	2.4789E-02	0.0004	12.3990	1.8973E-02	0.0004	16.0290	1.0975E-02	0.0005
7.4640	2.4708E-02	0.0004	12.6060	1.8600E-02	0.0004	16.1890	1.0525E-02	0.0005
7.8020	2.4561E-02	0.0004	12.8090	1.8217E-02	0.0004	16.3480	1.0059E-02	0.0005

Table C-3. Radial distributions of fission neutrons (cont)

Radial layer outer boundary (cm)	Layer probability	Rel. error	Radial layer outer boundary (cm)	Layer probability	Rel. error	Radial layer outer boundary (cm)	Layer probability	Rel. error
8.1260	2.4372E-02	0.0004	13.0080	1.7847E-02	0.0004	16.5050	9.5784E-03	0.0005
8.4380	2.4149E-02	0.0004	13.2050	1.7454E-02	0.0004	16.6600	9.0926E-03	0.0005
8.7380	2.3904E-02	0.0004	13.3990	1.7059E-02	0.0004	16.8140	8.5878E-03	0.0006
9.0280	2.3635E-02	0.0004	13.5900	1.6683E-02	0.0004	16.9670	8.0664E-03	0.0006
9.3100	2.3374E-02	0.0004	13.7790	1.6300E-02	0.0004	17.1190	7.5290E-03	0.0006
9.5830	2.3087E-02	0.0004	13.9650	1.5919E-02	0.0004	17.2690	6.9726E-03	0.0006
9.8480	2.2778E-02	0.0004	14.1480	1.5531E-02	0.0004	17.4170	6.3902E-03	0.0006
10.1070	2.2450E-02	0.0004	14.3300	1.5134E-02	0.0004	17.5650	5.7786E-03	0.0006
10.3590	2.2134E-02	0.0004	14.5080	1.4728E-02	0.0004	17.7110	5.1157E-03	0.0007
10.6050	2.1794E-02	0.0004	14.6850	1.4330E-02	0.0004	17.8560	4.4022E-03	0.0007
10.8460	2.1460E-02	0.0004	14.8600	1.3934E-02	0.0005	18.0000	3.5718E-03	0.0007
3.8 (minimum boundary)			z=123.040			to z=123.520		
4.4270	1.9518E-02	0.0005	11.0810	2.1087E-02	0.0004	15.0320	1.3534E-02	0.0005
4.9760	2.2371E-02	0.0005	11.3110	2.0735E-02	0.0004	15.2030	1.3124E-02	0.0005
5.4700	2.3625E-02	0.0005	11.5370	2.0395E-02	0.0004	15.3720	1.2707E-02	0.0005
5.9230	2.4287E-02	0.0005	11.7590	2.0045E-02	0.0004	15.5390	1.2288E-02	0.0005
6.3430	2.4621E-02	0.0005	11.9760	1.9684E-02	0.0004	15.7040	1.1860E-02	0.0005
6.7380	2.4756E-02	0.0004	12.1890	1.9310E-02	0.0004	15.8670	1.1436E-02	0.0005
7.1100	2.4770E-02	0.0004	12.3990	1.8943E-02	0.0004	16.0290	1.0988E-02	0.0005
7.4640	2.4688E-02	0.0004	12.6060	1.8583E-02	0.0004	16.1890	1.0533E-02	0.0005
7.8020	2.4557E-02	0.0004	12.8090	1.8210E-02	0.0004	16.3480	1.0071E-02	0.0005
8.1260	2.4364E-02	0.0004	13.0080	1.7834E-02	0.0004	16.5050	9.5945E-03	0.0005
8.4380	2.4144E-02	0.0004	13.2050	1.7450E-02	0.0004	16.6600	9.1075E-03	0.0006
8.7380	2.3898E-02	0.0004	13.3990	1.7068E-02	0.0004	16.8140	8.6041E-03	0.0006
9.0280	2.3621E-02	0.0004	13.5900	1.6695E-02	0.0004	16.9670	8.0843E-03	0.0006
9.3100	2.3358E-02	0.0004	13.7790	1.6311E-02	0.0004	17.1190	7.5537E-03	0.0006
9.5830	2.3058E-02	0.0004	13.9650	1.5926E-02	0.0004	17.2690	6.9961E-03	0.0006
9.8480	2.2758E-02	0.0004	14.1480	1.5537E-02	0.0004	17.4170	6.4086E-03	0.0006
10.1070	2.2441E-02	0.0004	14.3300	1.5144E-02	0.0004	17.5650	5.7980E-03	0.0006
10.3590	2.2128E-02	0.0004	14.5080	1.4744E-02	0.0004	17.7110	5.1375E-03	0.0007
10.6050	2.1787E-02	0.0004	14.6850	1.4333E-02	0.0005	17.8560	4.4194E-03	0.0007
10.8460	2.1452E-02	0.0004	14.8600	1.3932E-02	0.0005	18.0000	3.5868E-03	0.0007
3.8 (minimum boundary)			z=123.520			to z=124.000		
4.4270	1.9503E-02	0.0005	11.0810	2.1083E-02	0.0004	15.0320	1.3549E-02	0.0005
4.9760	2.2367E-02	0.0005	11.3110	2.0738E-02	0.0004	15.2030	1.3128E-02	0.0005
5.4700	2.3619E-02	0.0005	11.5370	2.0387E-02	0.0004	15.3720	1.2716E-02	0.0005
5.9230	2.4296E-02	0.0005	11.7590	2.0030E-02	0.0004	15.5390	1.2308E-02	0.0005
6.3430	2.4609E-02	0.0005	11.9760	1.9680E-02	0.0004	15.7040	1.1877E-02	0.0005
6.7380	2.4720E-02	0.0005	12.1890	1.9294E-02	0.0004	15.8670	1.1437E-02	0.0005
7.1100	2.4733E-02	0.0004	12.3990	1.8939E-02	0.0004	16.0290	1.0999E-02	0.0005
7.4640	2.4659E-02	0.0004	12.6060	1.8561E-02	0.0004	16.1890	1.0554E-02	0.0005
7.8020	2.4540E-02	0.0004	12.8090	1.8202E-02	0.0004	16.3480	1.0093E-02	0.0005
8.1260	2.4346E-02	0.0004	13.0080	1.7829E-02	0.0004	16.5050	9.6188E-03	0.0005
8.4380	2.4138E-02	0.0004	13.2050	1.7445E-02	0.0004	16.6600	9.1226E-03	0.0006
8.7380	2.3875E-02	0.0004	13.3990	1.7075E-02	0.0004	16.8140	8.6263E-03	0.0006
9.0280	2.3608E-02	0.0004	13.5900	1.6709E-02	0.0004	16.9670	8.1186E-03	0.0006
9.3100	2.3338E-02	0.0004	13.7790	1.6322E-02	0.0004	17.1190	7.5791E-03	0.0006
9.5830	2.3037E-02	0.0004	13.9650	1.5927E-02	0.0004	17.2690	7.0146E-03	0.0006
9.8480	2.2742E-02	0.0004	14.1480	1.5537E-02	0.0004	17.4170	6.4345E-03	0.0006
10.1070	2.2426E-02	0.0004	14.3300	1.5143E-02	0.0004	17.5650	5.8151E-03	0.0006

Table C-3. Radial distributions of fission neutrons (cont)

Radial layer outer boundary (cm)	Layer probability	Rel. error	Radial layer outer boundary (cm)	Layer probability	Rel. error	Radial layer outer boundary (cm)	Layer probability	Rel. error
10.3590	2.2108E-02	0.0004	14.5080	1.4745E-02	0.0005	17.7110	5.1545E-03	0.0007
10.6050	2.1768E-02	0.0004	14.6850	1.4349E-02	0.0005	17.8560	4.4307E-03	0.0007
10.8460	2.1442E-02	0.0004	14.8600	1.3953E-02	0.0005	18.0000	3.6009E-03	0.0007
3.8 (minimum boundary)			z=124.000			to z=124.480		
4.4270	1.9491E-02	0.0005	11.0810	2.1071E-02	0.0004	15.0320	1.3566E-02	0.0005
4.9760	2.2355E-02	0.0005	11.3110	2.0721E-02	0.0004	15.2030	1.3147E-02	0.0005
5.4700	2.3612E-02	0.0005	11.5370	2.0383E-02	0.0004	15.3720	1.2736E-02	0.0005
5.9230	2.4286E-02	0.0005	11.7590	2.0013E-02	0.0004	15.5390	1.2317E-02	0.0005
6.3430	2.4597E-02	0.0005	11.9760	1.9649E-02	0.0004	15.7040	1.1893E-02	0.0005
6.7380	2.4730E-02	0.0005	12.1890	1.9300E-02	0.0004	15.8670	1.1457E-02	0.0005
7.1100	2.4720E-02	0.0004	12.3990	1.8925E-02	0.0004	16.0290	1.1019E-02	0.0005
7.4640	2.4650E-02	0.0004	12.6060	1.8549E-02	0.0004	16.1890	1.0561E-02	0.0005
7.8020	2.4518E-02	0.0004	12.8090	1.8181E-02	0.0004	16.3480	1.0105E-02	0.0005
8.1260	2.4327E-02	0.0004	13.0080	1.7810E-02	0.0004	16.5050	9.6341E-03	0.0005
8.4380	2.4117E-02	0.0004	13.2050	1.7444E-02	0.0004	16.6600	9.1397E-03	0.0006
8.7380	2.3878E-02	0.0004	13.3990	1.7068E-02	0.0004	16.8140	8.6498E-03	0.0006
9.0280	2.3604E-02	0.0004	13.5900	1.6698E-02	0.0004	16.9670	8.1353E-03	0.0006
9.3100	2.3329E-02	0.0004	13.7790	1.6322E-02	0.0004	17.1190	7.5932E-03	0.0006
9.5830	2.3031E-02	0.0004	13.9650	1.5934E-02	0.0004	17.2690	7.0381E-03	0.0006
9.8480	2.2732E-02	0.0004	14.1480	1.5530E-02	0.0004	17.4170	6.4523E-03	0.0006
10.1070	2.2407E-02	0.0004	14.3300	1.5144E-02	0.0005	17.5650	5.8321E-03	0.0007
10.3590	2.2080E-02	0.0004	14.5080	1.4756E-02	0.0005	17.7110	5.1752E-03	0.0007
10.6050	2.1759E-02	0.0004	14.6850	1.4360E-02	0.0005	17.8560	4.4548E-03	0.0007
10.8460	2.1422E-02	0.0004	14.8600	1.3969E-02	0.0005	18.0000	3.6215E-03	0.0007
3.8 (minimum boundary)			z=124.480			to z=124.960		
4.4270	1.9490E-02	0.0006	11.0810	2.1078E-02	0.0004	15.0320	1.3568E-02	0.0005
4.9760	2.2339E-02	0.0005	11.3110	2.0714E-02	0.0004	15.2030	1.3148E-02	0.0005
5.4700	2.3607E-02	0.0005	11.5370	2.0368E-02	0.0004	15.3720	1.2740E-02	0.0005
5.9230	2.4278E-02	0.0005	11.7590	2.0011E-02	0.0004	15.5390	1.2325E-02	0.0005
6.3430	2.4593E-02	0.0005	11.9760	1.9650E-02	0.0004	15.7040	1.1898E-02	0.0005
6.7380	2.4713E-02	0.0005	12.1890	1.9278E-02	0.0004	15.8670	1.1469E-02	0.0005
7.1100	2.4717E-02	0.0005	12.3990	1.8914E-02	0.0004	16.0290	1.1042E-02	0.0005
7.4640	2.4626E-02	0.0004	12.6060	1.8550E-02	0.0004	16.1890	1.0591E-02	0.0005
7.8020	2.4466E-02	0.0004	12.8090	1.8190E-02	0.0004	16.3480	1.0120E-02	0.0005
8.1260	2.4301E-02	0.0004	13.0080	1.7818E-02	0.0004	16.5050	9.6479E-03	0.0006
8.4380	2.4090E-02	0.0004	13.2050	1.7441E-02	0.0004	16.6600	9.1683E-03	0.0006
8.7380	2.3872E-02	0.0004	13.3990	1.7059E-02	0.0004	16.8140	8.6692E-03	0.0006
9.0280	2.3605E-02	0.0004	13.5900	1.6678E-02	0.0004	16.9670	8.1545E-03	0.0006
9.3100	2.3320E-02	0.0004	13.7790	1.6309E-02	0.0004	17.1190	7.6131E-03	0.0006
9.5830	2.3027E-02	0.0004	13.9650	1.5915E-02	0.0005	17.2690	7.0536E-03	0.0006
9.8480	2.2702E-02	0.0004	14.1480	1.5531E-02	0.0005	17.4170	6.4700E-03	0.0006
10.1070	2.2397E-02	0.0004	14.3300	1.5155E-02	0.0005	17.5650	5.8517E-03	0.0007
10.3590	2.2087E-02	0.0004	14.5080	1.4770E-02	0.0005	17.7110	5.1949E-03	0.0007
10.6050	2.1755E-02	0.0004	14.6850	1.4367E-02	0.0005	17.8560	4.4740E-03	0.0007
10.8460	2.1416E-02	0.0004	14.8600	1.3968E-02	0.0005	18.0000	3.6375E-03	0.0007
3.8 (minimum boundary)			z=124.960			to z=125.440		
4.4270	1.9488E-02	0.0006	11.0810	2.1049E-02	0.0004	15.0320	1.3580E-02	0.0005
4.9760	2.2333E-02	0.0005	11.3110	2.0706E-02	0.0004	15.2030	1.3170E-02	0.0005
5.4700	2.3591E-02	0.0005	11.5370	2.0359E-02	0.0004	15.3720	1.2761E-02	0.0005
5.9230	2.4251E-02	0.0005	11.7590	1.9999E-02	0.0004	15.5390	1.2351E-02	0.0005

Table C-3. Radial distributions of fission neutrons (cont)

Radial layer outer boundary (cm)	Layer probability	Rel. error	Radial layer outer boundary (cm)	Layer probability	Rel. error	Radial layer outer boundary (cm)	Layer probability	Rel. error
6.3430	2.4584E-02	0.0005	11.9760	1.9639E-02	0.0004	15.7040	1.1924E-02	0.0005
6.7380	2.4688E-02	0.0005	12.1890	1.9278E-02	0.0004	15.8670	1.1490E-02	0.0005
7.1100	2.4686E-02	0.0005	12.3990	1.8925E-02	0.0004	16.0290	1.1054E-02	0.0005
7.4640	2.4593E-02	0.0005	12.6060	1.8569E-02	0.0004	16.1890	1.0604E-02	0.0005
7.8020	2.4454E-02	0.0004	12.8090	1.8186E-02	0.0004	16.3480	1.0146E-02	0.0006
8.1260	2.4266E-02	0.0004	13.0080	1.7812E-02	0.0004	16.5050	9.6777E-03	0.0006
8.4380	2.4070E-02	0.0004	13.2050	1.7449E-02	0.0004	16.6600	9.1928E-03	0.0006
8.7380	2.3827E-02	0.0004	13.3990	1.7059E-02	0.0004	16.8140	8.7009E-03	0.0006
9.0280	2.3558E-02	0.0004	13.5900	1.6686E-02	0.0005	16.9670	8.1735E-03	0.0006
9.3100	2.3286E-02	0.0004	13.7790	1.6317E-02	0.0005	17.1190	7.6385E-03	0.0006
9.5830	2.2992E-02	0.0004	13.9650	1.5937E-02	0.0005	17.2690	7.0735E-03	0.0006
9.8480	2.2694E-02	0.0004	14.1480	1.5558E-02	0.0005	17.4170	6.4932E-03	0.0006
10.1070	2.2371E-02	0.0004	14.3300	1.5171E-02	0.0005	17.5650	5.8753E-03	0.0007
10.3590	2.2050E-02	0.0004	14.5080	1.4773E-02	0.0005	17.7110	5.2130E-03	0.0007
10.6050	2.1719E-02	0.0004	14.6850	1.4383E-02	0.0005	17.8560	4.4916E-03	0.0007
10.8460	2.1398E-02	0.0004	14.8600	1.3979E-02	0.0005	18.0000	3.6577E-03	0.0007
3.8 (minimum boundary)			z=125.440			to z=125.920		
4.4270	1.9486E-02	0.0006	11.0810	2.1031E-02	0.0004	15.0320	1.3596E-02	0.0005
4.9760	2.2334E-02	0.0005	11.3110	2.0702E-02	0.0004	15.2030	1.3182E-02	0.0005
5.4700	2.3584E-02	0.0005	11.5370	2.0343E-02	0.0004	15.3720	1.2773E-02	0.0005
5.9230	2.4215E-02	0.0005	11.7590	1.9984E-02	0.0004	15.5390	1.2360E-02	0.0005
6.3430	2.4533E-02	0.0005	11.9760	1.9633E-02	0.0004	15.7040	1.1942E-02	0.0005
6.7380	2.4662E-02	0.0005	12.1890	1.9267E-02	0.0004	15.8670	1.1507E-02	0.0005
7.1100	2.4669E-02	0.0005	12.3990	1.8903E-02	0.0004	16.0290	1.1069E-02	0.0005
7.4640	2.4571E-02	0.0005	12.6060	1.8556E-02	0.0004	16.1890	1.0624E-02	0.0005
7.8020	2.4428E-02	0.0005	12.8090	1.8179E-02	0.0004	16.3480	1.0172E-02	0.0006
8.1260	2.4257E-02	0.0005	13.0080	1.7823E-02	0.0004	16.5050	9.7005E-03	0.0006
8.4380	2.4048E-02	0.0004	13.2050	1.7440E-02	0.0005	16.6600	9.2205E-03	0.0006
8.7380	2.3807E-02	0.0004	13.3990	1.7071E-02	0.0005	16.8140	8.7265E-03	0.0006
9.0280	2.3542E-02	0.0004	13.5900	1.6706E-02	0.0005	16.9670	8.2014E-03	0.0006
9.3100	2.3257E-02	0.0004	13.7790	1.6318E-02	0.0005	17.1190	7.6613E-03	0.0006
9.5830	2.2972E-02	0.0004	13.9650	1.5936E-02	0.0005	17.2690	7.1065E-03	0.0006
9.8480	2.2663E-02	0.0004	14.1480	1.5553E-02	0.0005	17.4170	6.5204E-03	0.0007
10.1070	2.2363E-02	0.0004	14.3300	1.5170E-02	0.0005	17.5650	5.9066E-03	0.0007
10.3590	2.2036E-02	0.0004	14.5080	1.4795E-02	0.0005	17.7110	5.2445E-03	0.0007
10.6050	2.1701E-02	0.0004	14.6850	1.4392E-02	0.0005	17.8560	4.5143E-03	0.0007
10.8460	2.1366E-02	0.0004	14.8600	1.3998E-02	0.0005	18.0000	3.6800E-03	0.0007
3.8 (minimum boundary)			z=125.920			to z=126.400		
4.4270	1.9482E-02	0.0006	11.0810	2.1014E-02	0.0004	15.0320	1.3611E-02	0.0005
4.9760	2.2327E-02	0.0006	11.3110	2.0666E-02	0.0004	15.2030	1.3204E-02	0.0005
5.4700	2.3551E-02	0.0005	11.5370	2.0323E-02	0.0004	15.3720	1.2805E-02	0.0005
5.9230	2.4200E-02	0.0005	11.7590	1.9978E-02	0.0004	15.5390	1.2381E-02	0.0005
6.3430	2.4508E-02	0.0005	11.9760	1.9613E-02	0.0004	15.7040	1.1961E-02	0.0005
6.7380	2.4642E-02	0.0005	12.1890	1.9269E-02	0.0004	15.8670	1.1532E-02	0.0005
7.1100	2.4635E-02	0.0005	12.3990	1.8901E-02	0.0004	16.0290	1.1089E-02	0.0005
7.4640	2.4560E-02	0.0005	12.6060	1.8522E-02	0.0005	16.1890	1.0648E-02	0.0006
7.8020	2.4412E-02	0.0005	12.8090	1.8162E-02	0.0005	16.3480	1.0188E-02	0.0006
8.1260	2.4239E-02	0.0005	13.0080	1.7813E-02	0.0005	16.5050	9.7202E-03	0.0006
8.4380	2.4024E-02	0.0005	13.2050	1.7439E-02	0.0005	16.6600	9.2446E-03	0.0006
8.7380	2.3787E-02	0.0005	13.3990	1.7059E-02	0.0005	16.8140	8.7461E-03	0.0006

Table C-3. Radial distributions of fission neutrons (cont)

Radial layer outer boundary (cm)	Layer probability	Rel. error	Radial layer outer boundary (cm)	Layer probability	Rel. error	Radial layer outer boundary (cm)	Layer probability	Rel. error
9.0280	2.3524E-02	0.0004	13.5900	1.6685E-02	0.0005	16.9670	8.2275E-03	0.0006
9.3100	2.3233E-02	0.0004	13.7790	1.6315E-02	0.0005	17.1190	7.6956E-03	0.0006
9.5830	2.2939E-02	0.0004	13.9650	1.5942E-02	0.0005	17.2690	7.1400E-03	0.0006
9.8480	2.2646E-02	0.0004	14.1480	1.5570E-02	0.0005	17.4170	6.5477E-03	0.0007
10.1070	2.2340E-02	0.0004	14.3300	1.5181E-02	0.0005	17.5650	5.9311E-03	0.0007
10.3590	2.2039E-02	0.0004	14.5080	1.4803E-02	0.0005	17.7110	5.2698E-03	0.0007
10.6050	2.1688E-02	0.0004	14.6850	1.4406E-02	0.0005	17.8560	4.5444E-03	0.0007
10.8460	2.1365E-02	0.0004	14.8600	1.4008E-02	0.0005	18.0000	3.7048E-03	0.0007
3.8 (minimum boundary)			z=126.400			to z=126.880		
4.4270	1.9488E-02	0.0006	11.0810	2.0985E-02	0.0004	15.0320	1.3632E-02	0.0005
4.9760	2.2317E-02	0.0006	11.3110	2.0644E-02	0.0005	15.2030	1.3228E-02	0.0005
5.4700	2.3549E-02	0.0005	11.5370	2.0311E-02	0.0005	15.3720	1.2814E-02	0.0005
5.9230	2.4183E-02	0.0005	11.7590	1.9962E-02	0.0005	15.5390	1.2411E-02	0.0005
6.3430	2.4498E-02	0.0005	11.9760	1.9607E-02	0.0005	15.7040	1.1991E-02	0.0005
6.7380	2.4614E-02	0.0005	12.1890	1.9248E-02	0.0005	15.8670	1.1571E-02	0.0005
7.1100	2.4624E-02	0.0005	12.3990	1.8890E-02	0.0005	16.0290	1.1136E-02	0.0006
7.4640	2.4539E-02	0.0005	12.6060	1.8521E-02	0.0005	16.1890	1.0683E-02	0.0006
7.8020	2.4391E-02	0.0005	12.8090	1.8160E-02	0.0005	16.3480	1.0220E-02	0.0006
8.1260	2.4202E-02	0.0005	13.0080	1.7809E-02	0.0005	16.5050	9.7535E-03	0.0006
8.4380	2.3976E-02	0.0005	13.2050	1.7426E-02	0.0005	16.6600	9.2695E-03	0.0006
8.7380	2.3735E-02	0.0005	13.3990	1.7059E-02	0.0005	16.8140	8.7711E-03	0.0006
9.0280	2.3479E-02	0.0005	13.5900	1.6701E-02	0.0005	16.9670	8.2592E-03	0.0006
9.3100	2.3201E-02	0.0005	13.7790	1.6319E-02	0.0005	17.1190	7.7171E-03	0.0006
9.5830	2.2917E-02	0.0005	13.9650	1.5946E-02	0.0005	17.2690	7.1613E-03	0.0006
9.8480	2.2615E-02	0.0005	14.1480	1.5567E-02	0.0005	17.4170	6.5741E-03	0.0007
10.1070	2.2310E-02	0.0005	14.3300	1.5204E-02	0.0005	17.5650	5.9580E-03	0.0007
10.3590	2.1993E-02	0.0004	14.5080	1.4811E-02	0.0005	17.7110	5.2970E-03	0.0007
10.6050	2.1667E-02	0.0004	14.6850	1.4422E-02	0.0005	17.8560	4.5692E-03	0.0007
10.8460	2.1332E-02	0.0004	14.8600	1.4028E-02	0.0005	18.0000	3.7310E-03	0.0007
3.8 (minimum boundary)			z=126.880			to z=127.360		
4.4270	1.9485E-02	0.0006	11.0810	2.0972E-02	0.0005	15.0320	1.3643E-02	0.0005
4.9760	2.2318E-02	0.0006	11.3110	2.0632E-02	0.0005	15.2030	1.3242E-02	0.0005
5.4700	2.3550E-02	0.0005	11.5370	2.0283E-02	0.0005	15.3720	1.2838E-02	0.0005
5.9230	2.4169E-02	0.0005	11.7590	1.9934E-02	0.0005	15.5390	1.2429E-02	0.0005
6.3430	2.4474E-02	0.0005	11.9760	1.9587E-02	0.0005	15.7040	1.2008E-02	0.0005
6.7380	2.4588E-02	0.0005	12.1890	1.9239E-02	0.0005	15.8670	1.1595E-02	0.0006
7.1100	2.4589E-02	0.0005	12.3990	1.8875E-02	0.0005	16.0290	1.1160E-02	0.0006
7.4640	2.4498E-02	0.0005	12.6060	1.8514E-02	0.0005	16.1890	1.0707E-02	0.0006
7.8020	2.4358E-02	0.0005	12.8090	1.8159E-02	0.0005	16.3480	1.0252E-02	0.0006
8.1260	2.4177E-02	0.0005	13.0080	1.7790E-02	0.0005	16.5050	9.7815E-03	0.0006
8.4380	2.3958E-02	0.0005	13.2050	1.7427E-02	0.0005	16.6600	9.3002E-03	0.0006
8.7380	2.3705E-02	0.0005	13.3990	1.7069E-02	0.0005	16.8140	8.7942E-03	0.0006
9.0280	2.3448E-02	0.0005	13.5900	1.6700E-02	0.0005	16.9670	8.2937E-03	0.0006
9.3100	2.3182E-02	0.0005	13.7790	1.6327E-02	0.0005	17.1190	7.7566E-03	0.0006
9.5830	2.2891E-02	0.0005	13.9650	1.5960E-02	0.0005	17.2690	7.1906E-03	0.0007
9.8480	2.2586E-02	0.0005	14.1480	1.5576E-02	0.0005	17.4170	6.6047E-03	0.0007
10.1070	2.2287E-02	0.0005	14.3300	1.5202E-02	0.0005	17.5650	5.9906E-03	0.0007
10.3590	2.1961E-02	0.0005	14.5080	1.4808E-02	0.0005	17.7110	5.3335E-03	0.0007
10.6050	2.1649E-02	0.0005	14.6850	1.4424E-02	0.0005	17.8560	4.6053E-03	0.0008
10.8460	2.1320E-02	0.0005	14.8600	1.4046E-02	0.0005	18.0000	3.7602E-03	0.0008

Table C-3. Radial distributions of fission neutrons (cont)

Radial layer outer boundary (cm)	Layer probability	Rel. error	Radial layer outer boundary (cm)	Layer probability	Rel. error	Radial layer outer boundary (cm)	Layer probability	Rel. error
3.8 (minimum boundary)			z=127.360			to z=127.840		
4.4270	1.9482E-02	0.0006	11.0810	2.0951E-02	0.0005	15.0320	1.3655E-02	0.0005
4.9760	2.2326E-02	0.0006	11.3110	2.0610E-02	0.0005	15.2030	1.3264E-02	0.0005
5.4700	2.3555E-02	0.0006	11.5370	2.0266E-02	0.0005	15.3720	1.2870E-02	0.0005
5.9230	2.4182E-02	0.0005	11.7590	1.9910E-02	0.0005	15.5390	1.2445E-02	0.0005
6.3430	2.4456E-02	0.0005	11.9760	1.9568E-02	0.0005	15.7040	1.2035E-02	0.0006
6.7380	2.4584E-02	0.0005	12.1890	1.9218E-02	0.0005	15.8670	1.1606E-02	0.0006
7.1100	2.4577E-02	0.0005	12.3990	1.8861E-02	0.0005	16.0290	1.1173E-02	0.0006
7.4640	2.4481E-02	0.0005	12.6060	1.8500E-02	0.0005	16.1890	1.0736E-02	0.0006
7.8020	2.4319E-02	0.0005	12.8090	1.8164E-02	0.0005	16.3480	1.0278E-02	0.0006
8.1260	2.4146E-02	0.0005	13.0080	1.7794E-02	0.0005	16.5050	9.8095E-03	0.0006
8.4380	2.3921E-02	0.0005	13.2050	1.7423E-02	0.0005	16.6600	9.3288E-03	0.0006
8.7380	2.3681E-02	0.0005	13.3990	1.7063E-02	0.0005	16.8140	8.8403E-03	0.0006
9.0280	2.3409E-02	0.0005	13.5900	1.6688E-02	0.0005	16.9670	8.3192E-03	0.0006
9.3100	2.3139E-02	0.0005	13.7790	1.6328E-02	0.0005	17.1190	7.7845E-03	0.0006
9.5830	2.2858E-02	0.0005	13.9650	1.5956E-02	0.0005	17.2690	7.2313E-03	0.0007
9.8480	2.2559E-02	0.0005	14.1480	1.5583E-02	0.0005	17.4170	6.6487E-03	0.0007
10.1070	2.2239E-02	0.0005	14.3300	1.5205E-02	0.0005	17.5650	6.0308E-03	0.0007
10.3590	2.1924E-02	0.0005	14.5080	1.4823E-02	0.0005	17.7110	5.3668E-03	0.0007
10.6050	2.1608E-02	0.0005	14.6850	1.4438E-02	0.0005	17.8560	4.6424E-03	0.0008
10.8460	2.1285E-02	0.0005	14.8600	1.4057E-02	0.0005	18.0000	3.7976E-03	0.0008
3.8 (minimum boundary)			z=127.840			to z=128.320		
4.4270	1.9492E-02	0.0006	11.0810	2.0924E-02	0.0005	15.0320	1.3680E-02	0.0005
4.9760	2.2291E-02	0.0006	11.3110	2.0570E-02	0.0005	15.2030	1.3283E-02	0.0005
5.4700	2.3532E-02	0.0006	11.5370	2.0227E-02	0.0005	15.3720	1.2874E-02	0.0006
5.9230	2.4163E-02	0.0006	11.7590	1.9897E-02	0.0005	15.5390	1.2481E-02	0.0006
6.3430	2.4444E-02	0.0005	11.9760	1.9560E-02	0.0005	15.7040	1.2066E-02	0.0006
6.7380	2.4544E-02	0.0005	12.1890	1.9200E-02	0.0005	15.8670	1.1644E-02	0.0006
7.1100	2.4546E-02	0.0005	12.3990	1.8842E-02	0.0005	16.0290	1.1206E-02	0.0006
7.4640	2.4465E-02	0.0005	12.6060	1.8488E-02	0.0005	16.1890	1.0765E-02	0.0006
7.8020	2.4308E-02	0.0005	12.8090	1.8135E-02	0.0005	16.3480	1.0305E-02	0.0006
8.1260	2.4130E-02	0.0005	13.0080	1.7780E-02	0.0005	16.5050	9.8466E-03	0.0006
8.4380	2.3914E-02	0.0005	13.2050	1.7416E-02	0.0005	16.6600	9.3688E-03	0.0006
8.7380	2.3652E-02	0.0005	13.3990	1.7056E-02	0.0005	16.8140	8.8685E-03	0.0006
9.0280	2.3390E-02	0.0005	13.5900	1.6697E-02	0.0005	16.9670	8.3620E-03	0.0006
9.3100	2.3101E-02	0.0005	13.7790	1.6333E-02	0.0005	17.1190	7.8287E-03	0.0007
9.5830	2.2815E-02	0.0005	13.9650	1.5971E-02	0.0005	17.2690	7.2758E-03	0.0007
9.8480	2.2498E-02	0.0005	14.1480	1.5583E-02	0.0005	17.4170	6.6964E-03	0.0007
10.1070	2.2200E-02	0.0005	14.3300	1.5209E-02	0.0005	17.5650	6.0760E-03	0.0007
10.3590	2.1902E-02	0.0005	14.5080	1.4835E-02	0.0005	17.7110	5.4046E-03	0.0008
10.6050	2.1571E-02	0.0005	14.6850	1.4454E-02	0.0005	17.8560	4.6805E-03	0.0008
10.8460	2.1257E-02	0.0005	14.8600	1.4068E-02	0.0005	18.0000	3.8333E-03	0.0008
3.8 (minimum boundary)			z=128.320			to z=128.800		
4.4270	1.9512E-02	0.0006	11.0810	2.0875E-02	0.0005	15.0320	1.3696E-02	0.0006
4.9760	2.2297E-02	0.0006	11.3110	2.0532E-02	0.0005	15.2030	1.3303E-02	0.0006
5.4700	2.3527E-02	0.0006	11.5370	2.0196E-02	0.0005	15.3720	1.2898E-02	0.0006
5.9230	2.4128E-02	0.0006	11.7590	1.9865E-02	0.0005	15.5390	1.2504E-02	0.0006
6.3430	2.4425E-02	0.0005	11.9760	1.9524E-02	0.0005	15.7040	1.2097E-02	0.0006
6.7380	2.4540E-02	0.0005	12.1890	1.9173E-02	0.0005	15.8670	1.1674E-02	0.0006
7.1100	2.4528E-02	0.0005	12.3990	1.8818E-02	0.0005	16.0290	1.1252E-02	0.0006

Table C-3. Radial distributions of fission neutrons (cont)

Radial layer outer boundary (cm)	Layer probability	Rel. error	Radial layer outer boundary (cm)	Layer probability	Rel. error	Radial layer outer boundary (cm)	Layer probability	Rel. error
7.4640	2.4406E-02	0.0005	12.6060	1.8480E-02	0.0005	16.1890	1.0812E-02	0.0006
7.8020	2.4260E-02	0.0005	12.8090	1.8130E-02	0.0005	16.3480	1.0355E-02	0.0006
8.1260	2.4074E-02	0.0005	13.0080	1.7759E-02	0.0005	16.5050	9.8894E-03	0.0006
8.4380	2.3856E-02	0.0005	13.2050	1.7423E-02	0.0005	16.6600	9.4171E-03	0.0006
8.7380	2.3591E-02	0.0005	13.3990	1.7068E-02	0.0005	16.8140	8.9289E-03	0.0006
9.0280	2.3346E-02	0.0005	13.5900	1.6699E-02	0.0005	16.9670	8.4153E-03	0.0007
9.3100	2.3054E-02	0.0005	13.7790	1.6342E-02	0.0005	17.1190	7.8863E-03	0.0007
9.5830	2.2790E-02	0.0005	13.9650	1.5960E-02	0.0005	17.2690	7.3233E-03	0.0007
9.8480	2.2493E-02	0.0005	14.1480	1.5590E-02	0.0005	17.4170	6.7396E-03	0.0007
10.1070	2.2170E-02	0.0005	14.3300	1.5219E-02	0.0005	17.5650	6.1293E-03	0.0007
10.3590	2.1856E-02	0.0005	14.5080	1.4838E-02	0.0005	17.7110	5.4629E-03	0.0008
10.6050	2.1518E-02	0.0005	14.6850	1.4455E-02	0.0005	17.8560	4.7390E-03	0.0008
10.8460	2.1207E-02	0.0005	14.8600	1.4075E-02	0.0005	18.0000	3.8802E-03	0.0008
3.8 (minimum boundary)			z=128.800			to z=129.280		
4.4270	1.9537E-02	0.0006	11.0810	2.0812E-02	0.0005	15.0320	1.3711E-02	0.0006
4.9760	2.2310E-02	0.0006	11.3110	2.0496E-02	0.0005	15.2030	1.3323E-02	0.0006
5.4700	2.3521E-02	0.0006	11.5370	2.0175E-02	0.0005	15.3720	1.2942E-02	0.0006
5.9230	2.4114E-02	0.0006	11.7590	1.9840E-02	0.0005	15.5390	1.2540E-02	0.0006
6.3430	2.4391E-02	0.0006	11.9760	1.9494E-02	0.0005	15.7040	1.2127E-02	0.0006
6.7380	2.4500E-02	0.0006	12.1890	1.9156E-02	0.0005	15.8670	1.1711E-02	0.0006
7.1100	2.4486E-02	0.0005	12.3990	1.8814E-02	0.0005	16.0290	1.1285E-02	0.0006
7.4640	2.4400E-02	0.0005	12.6060	1.8470E-02	0.0005	16.1890	1.0853E-02	0.0006
7.8020	2.4213E-02	0.0005	12.8090	1.8116E-02	0.0005	16.3480	1.0398E-02	0.0006
8.1260	2.4031E-02	0.0005	13.0080	1.7765E-02	0.0005	16.5050	9.9386E-03	0.0006
8.4380	2.3817E-02	0.0005	13.2050	1.7409E-02	0.0005	16.6600	9.4670E-03	0.0006
8.7380	2.3555E-02	0.0005	13.3990	1.7062E-02	0.0005	16.8140	8.9794E-03	0.0007
9.0280	2.3276E-02	0.0005	13.5900	1.6690E-02	0.0005	16.9670	8.4613E-03	0.0007
9.3100	2.3013E-02	0.0005	13.7790	1.6336E-02	0.0005	17.1190	7.9340E-03	0.0007
9.5830	2.2732E-02	0.0005	13.9650	1.5969E-02	0.0005	17.2690	7.3692E-03	0.0007
9.8480	2.2414E-02	0.0005	14.1480	1.5604E-02	0.0005	17.4170	6.7917E-03	0.0007
10.1070	2.2120E-02	0.0005	14.3300	1.5232E-02	0.0005	17.5650	6.1773E-03	0.0008
10.3590	2.1809E-02	0.0005	14.5080	1.4865E-02	0.0005	17.7110	5.5137E-03	0.0008
10.6050	2.1490E-02	0.0005	14.6850	1.4487E-02	0.0006	17.8560	4.7820E-03	0.0008
10.8460	2.1153E-02	0.0005	14.8600	1.4094E-02	0.0006	18.0000	3.9281E-03	0.0008
3.8 (minimum boundary)			z=129.280			to z=129.760		
4.4270	1.9559E-02	0.0006	11.0810	2.0801E-02	0.0005	15.0320	1.3736E-02	0.0006
4.9760	2.2337E-02	0.0006	11.3110	2.0463E-02	0.0005	15.2030	1.3363E-02	0.0006
5.4700	2.3509E-02	0.0006	11.5370	2.0125E-02	0.0005	15.3720	1.2981E-02	0.0006
5.9230	2.4108E-02	0.0006	11.7590	1.9798E-02	0.0005	15.5390	1.2577E-02	0.0006
6.3430	2.4384E-02	0.0006	11.9760	1.9472E-02	0.0005	15.7040	1.2174E-02	0.0006
6.7380	2.4457E-02	0.0006	12.1890	1.9136E-02	0.0005	15.8670	1.1753E-02	0.0006
7.1100	2.4445E-02	0.0006	12.3990	1.8797E-02	0.0005	16.0290	1.1332E-02	0.0006
7.4640	2.4335E-02	0.0005	12.6060	1.8447E-02	0.0005	16.1890	1.0894E-02	0.0006
7.8020	2.4167E-02	0.0005	12.8090	1.8085E-02	0.0005	16.3480	1.0451E-02	0.0006
8.1260	2.3953E-02	0.0005	13.0080	1.7752E-02	0.0005	16.5050	9.9983E-03	0.0006
8.4380	2.3726E-02	0.0005	13.2050	1.7409E-02	0.0005	16.6600	9.5244E-03	0.0007
8.7380	2.3481E-02	0.0005	13.3990	1.7054E-02	0.0005	16.8140	9.0325E-03	0.0007
9.0280	2.3235E-02	0.0005	13.5900	1.6696E-02	0.0005	16.9670	8.5301E-03	0.0007
9.3100	2.2949E-02	0.0005	13.7790	1.6342E-02	0.0005	17.1190	8.0031E-03	0.0007
9.5830	2.2668E-02	0.0005	13.9650	1.5975E-02	0.0005	17.2690	7.4414E-03	0.0007

Table C-3. Radial distributions of fission neutrons (cont)

Radial layer outer boundary (cm)	Layer probability	Rel. error	Radial layer outer boundary (cm)	Layer probability	Rel. error	Radial layer outer boundary (cm)	Layer probability	Rel. error
9.8480	2.2371E-02	0.0005	14.1480	1.5615E-02	0.0006	17.4170	6.8533E-03	0.0007
10.1070	2.2054E-02	0.0005	14.3300	1.5250E-02	0.0006	17.5650	6.2415E-03	0.0008
10.3590	2.1736E-02	0.0005	14.5080	1.4872E-02	0.0006	17.7110	5.5681E-03	0.0008
10.6050	2.1434E-02	0.0005	14.6850	1.4494E-02	0.0006	17.8560	4.8370E-03	0.0008
10.8460	2.1131E-02	0.0005	14.8600	1.4109E-02	0.0006	18.0000	3.9775E-03	0.0008
3.8 (minimum boundary)			z=129.760			to z=130.240		
4.4270	1.9612E-02	0.0007	11.0810	2.0749E-02	0.0005	15.0320	1.3772E-02	0.0006
4.9760	2.2338E-02	0.0006	11.3110	2.0411E-02	0.0005	15.2030	1.3394E-02	0.0006
5.4700	2.3522E-02	0.0006	11.5370	2.0082E-02	0.0005	15.3720	1.3010E-02	0.0006
5.9230	2.4111E-02	0.0006	11.7590	1.9758E-02	0.0005	15.5390	1.2625E-02	0.0006
6.3430	2.4359E-02	0.0006	11.9760	1.9426E-02	0.0005	15.7040	1.2217E-02	0.0006
6.7380	2.4416E-02	0.0006	12.1890	1.9095E-02	0.0005	15.8670	1.1800E-02	0.0006
7.1100	2.4363E-02	0.0006	12.3990	1.8759E-02	0.0005	16.0290	1.1379E-02	0.0006
7.4640	2.4257E-02	0.0006	12.6060	1.8422E-02	0.0005	16.1890	1.0956E-02	0.0006
7.8020	2.4102E-02	0.0006	12.8090	1.8072E-02	0.0005	16.3480	1.0518E-02	0.0006
8.1260	2.3898E-02	0.0006	13.0080	1.7733E-02	0.0005	16.5050	1.0045E-02	0.0007
8.4380	2.3675E-02	0.0006	13.2050	1.7375E-02	0.0006	16.6600	9.5863E-03	0.0007
8.7380	2.3439E-02	0.0005	13.3990	1.7013E-02	0.0006	16.8140	9.1011E-03	0.0007
9.0280	2.3179E-02	0.0005	13.5900	1.6681E-02	0.0006	16.9670	8.5946E-03	0.0007
9.3100	2.2884E-02	0.0005	13.7790	1.6340E-02	0.0006	17.1190	8.0735E-03	0.0007
9.5830	2.2593E-02	0.0005	13.9650	1.5987E-02	0.0006	17.2690	7.5188E-03	0.0007
9.8480	2.2308E-02	0.0005	14.1480	1.5632E-02	0.0006	17.4170	6.9411E-03	0.0008
10.1070	2.2010E-02	0.0005	14.3300	1.5266E-02	0.0006	17.5650	6.3162E-03	0.0008
10.3590	2.1690E-02	0.0005	14.5080	1.4894E-02	0.0006	17.7110	5.6458E-03	0.0008
10.6050	2.1375E-02	0.0005	14.6850	1.4526E-02	0.0006	17.8560	4.9131E-03	0.0008
10.8460	2.1049E-02	0.0005	14.8600	1.4145E-02	0.0006	18.0000	4.0494E-03	0.0008
3.8 (minimum boundary)			z=130.240			to z=130.720		
4.4270	1.9692E-02	0.0007	11.0810	2.0689E-02	0.0006	15.0320	1.3819E-02	0.0006
4.9760	2.2375E-02	0.0007	11.3110	2.0366E-02	0.0006	15.2030	1.3433E-02	0.0006
5.4700	2.3531E-02	0.0006	11.5370	2.0052E-02	0.0006	15.3720	1.3040E-02	0.0006
5.9230	2.4063E-02	0.0006	11.7590	1.9724E-02	0.0006	15.5390	1.2661E-02	0.0006
6.3430	2.4304E-02	0.0006	11.9760	1.9383E-02	0.0006	15.7040	1.2263E-02	0.0006
6.7380	2.4386E-02	0.0006	12.1890	1.9053E-02	0.0006	15.8670	1.1856E-02	0.0006
7.1100	2.4329E-02	0.0006	12.3990	1.8719E-02	0.0006	16.0290	1.1450E-02	0.0006
7.4640	2.4203E-02	0.0006	12.6060	1.8375E-02	0.0006	16.1890	1.1023E-02	0.0007
7.8020	2.4016E-02	0.0006	12.8090	1.8044E-02	0.0006	16.3480	1.0576E-02	0.0007
8.1260	2.3832E-02	0.0006	13.0080	1.7705E-02	0.0006	16.5050	1.0131E-02	0.0007
8.4380	2.3621E-02	0.0006	13.2050	1.7354E-02	0.0006	16.6600	9.6710E-03	0.0007
8.7380	2.3355E-02	0.0006	13.3990	1.7016E-02	0.0006	16.8140	9.1849E-03	0.0007
9.0280	2.3089E-02	0.0006	13.5900	1.6665E-02	0.0006	16.9670	8.6756E-03	0.0007
9.3100	2.2813E-02	0.0006	13.7790	1.6325E-02	0.0006	17.1190	8.1483E-03	0.0007
9.5830	2.2531E-02	0.0006	13.9650	1.5986E-02	0.0006	17.2690	7.5920E-03	0.0008
9.8480	2.2209E-02	0.0006	14.1480	1.5621E-02	0.0006	17.4170	7.0170E-03	0.0008
10.1070	2.1913E-02	0.0006	14.3300	1.5264E-02	0.0006	17.5650	6.4002E-03	0.0008
10.3590	2.1628E-02	0.0006	14.5080	1.4906E-02	0.0006	17.7110	5.7324E-03	0.0008
10.6050	2.1317E-02	0.0006	14.6850	1.4547E-02	0.0006	17.8560	4.9941E-03	0.0008
10.8460	2.1022E-02	0.0006	14.8600	1.4185E-02	0.0006	18.0000	4.1238E-03	0.0008
3.8 (minimum boundary)			z=130.720			to z=131.200		
4.4270	1.9794E-02	0.0007	11.0810	2.0606E-02	0.0006	15.0320	1.3857E-02	0.0006
4.9760	2.2436E-02	0.0007	11.3110	2.0300E-02	0.0006	15.2030	1.3481E-02	0.0006

Table C-3. Radial distributions of fission neutrons (cont)

Radial layer outer boundary (cm)	Layer probability	Rel. error	Radial layer outer boundary (cm)	Layer probability	Rel. error	Radial layer outer boundary (cm)	Layer probability	Rel. error
5.4700	2.3566E-02	0.0007	11.5370	1.9990E-02	0.0006	15.3720	1.3113E-02	0.0006
5.9230	2.4060E-02	0.0006	11.7590	1.9637E-02	0.0006	15.5390	1.2727E-02	0.0006
6.3430	2.4248E-02	0.0006	11.9760	1.9318E-02	0.0006	15.7040	1.2318E-02	0.0006
6.7380	2.4338E-02	0.0006	12.1890	1.8992E-02	0.0006	15.8670	1.1916E-02	0.0007
7.1100	2.4271E-02	0.0006	12.3990	1.8660E-02	0.0006	16.0290	1.1515E-02	0.0007
7.4640	2.4122E-02	0.0006	12.6060	1.8340E-02	0.0006	16.1890	1.1089E-02	0.0007
7.8020	2.3933E-02	0.0006	12.8090	1.8013E-02	0.0006	16.3480	1.0660E-02	0.0007
8.1260	2.3731E-02	0.0006	13.0080	1.7688E-02	0.0006	16.5050	1.0215E-02	0.0007
8.4380	2.3502E-02	0.0006	13.2050	1.7341E-02	0.0006	16.6600	9.7508E-03	0.0007
8.7380	2.3275E-02	0.0006	13.3990	1.6992E-02	0.0006	16.8140	9.2698E-03	0.0007
9.0280	2.2995E-02	0.0006	13.5900	1.6666E-02	0.0006	16.9670	8.7695E-03	0.0007
9.3100	2.2733E-02	0.0006	13.7790	1.6329E-02	0.0006	17.1190	8.2561E-03	0.0008
9.5830	2.2447E-02	0.0006	13.9650	1.5970E-02	0.0006	17.2690	7.7073E-03	0.0008
9.8480	2.2145E-02	0.0006	14.1480	1.5609E-02	0.0006	17.4170	7.1152E-03	0.0008
10.1070	2.1847E-02	0.0006	14.3300	1.5268E-02	0.0006	17.5650	6.4923E-03	0.0008
10.3590	2.1551E-02	0.0006	14.5080	1.4927E-02	0.0006	17.7110	5.8213E-03	0.0008
10.6050	2.1229E-02	0.0006	14.6850	1.4585E-02	0.0006	17.8560	5.0853E-03	0.0009
10.8460	2.0940E-02	0.0006	14.8600	1.4229E-02	0.0006	18.0000	4.2194E-03	0.0009
3.8 (minimum boundary)			z=131.200			to z=131.680		
4.4270	1.9936E-02	0.0007	11.0810	2.0524E-02	0.0006	15.0320	1.3891E-02	0.0006
4.9760	2.2511E-02	0.0007	11.3110	2.0210E-02	0.0006	15.2030	1.3524E-02	0.0006
5.4700	2.3603E-02	0.0007	11.5370	1.9900E-02	0.0006	15.3720	1.3163E-02	0.0007
5.9230	2.4046E-02	0.0007	11.7590	1.9584E-02	0.0006	15.5390	1.2776E-02	0.0007
6.3430	2.4217E-02	0.0006	11.9760	1.9264E-02	0.0006	15.7040	1.2389E-02	0.0007
6.7380	2.4250E-02	0.0006	12.1890	1.8947E-02	0.0006	15.8670	1.1994E-02	0.0007
7.1100	2.4177E-02	0.0006	12.3990	1.8623E-02	0.0006	16.0290	1.1602E-02	0.0007
7.4640	2.4059E-02	0.0006	12.6060	1.8296E-02	0.0006	16.1890	1.1178E-02	0.0007
7.8020	2.3868E-02	0.0006	12.8090	1.7969E-02	0.0006	16.3480	1.0766E-02	0.0007
8.1260	2.3628E-02	0.0006	13.0080	1.7641E-02	0.0006	16.5050	1.0316E-02	0.0007
8.4380	2.3390E-02	0.0006	13.2050	1.7318E-02	0.0006	16.6600	9.8598E-03	0.0007
8.7380	2.3123E-02	0.0006	13.3990	1.6982E-02	0.0006	16.8140	9.3811E-03	0.0008
9.0280	2.2861E-02	0.0006	13.5900	1.6655E-02	0.0006	16.9670	8.8985E-03	0.0008
9.3100	2.2612E-02	0.0006	13.7790	1.6327E-02	0.0006	17.1190	8.3748E-03	0.0008
9.5830	2.2308E-02	0.0006	13.9650	1.5988E-02	0.0006	17.2690	7.8329E-03	0.0008
9.8480	2.2028E-02	0.0006	14.1480	1.5631E-02	0.0006	17.4170	7.2428E-03	0.0008
10.1070	2.1736E-02	0.0006	14.3300	1.5302E-02	0.0006	17.5650	6.6173E-03	0.0008
10.3590	2.1424E-02	0.0006	14.5080	1.4964E-02	0.0006	17.7110	5.9491E-03	0.0009
10.6050	2.1124E-02	0.0006	14.6850	1.4604E-02	0.0006	17.8560	5.2108E-03	0.0009
10.8460	2.0828E-02	0.0006	14.8600	1.4242E-02	0.0006	18.0000	4.3318E-03	0.0009
3.8 (minimum boundary)			z=131.680			to z=132.160		
4.4270	2.0136E-02	0.0008	11.0810	2.0408E-02	0.0006	15.0320	1.3933E-02	0.0007
4.9760	2.2647E-02	0.0008	11.3110	2.0101E-02	0.0006	15.2030	1.3576E-02	0.0007
5.4700	2.3619E-02	0.0007	11.5370	1.9796E-02	0.0006	15.3720	1.3231E-02	0.0007
5.9230	2.4036E-02	0.0007	11.7590	1.9475E-02	0.0006	15.5390	1.2862E-02	0.0007
6.3430	2.4189E-02	0.0007	11.9760	1.9190E-02	0.0006	15.7040	1.2484E-02	0.0007
6.7380	2.4157E-02	0.0007	12.1890	1.8882E-02	0.0006	15.8670	1.2096E-02	0.0007
7.1100	2.4081E-02	0.0007	12.3990	1.8549E-02	0.0006	16.0290	1.1685E-02	0.0007
7.4640	2.3936E-02	0.0006	12.6060	1.8226E-02	0.0006	16.1890	1.1290E-02	0.0007
7.8020	2.3756E-02	0.0006	12.8090	1.7911E-02	0.0006	16.3480	1.0875E-02	0.0007
8.1260	2.3514E-02	0.0006	13.0080	1.7595E-02	0.0006	16.5050	1.0435E-02	0.0008

Table C-3. Radial distributions of fission neutrons (cont)

Radial layer outer boundary (cm)	Layer probability	Rel. error	Radial layer outer boundary (cm)	Layer probability	Rel. error	Radial layer outer boundary (cm)	Layer probability	Rel. error
8.4380	2.3254E-02	0.0006	13.2050	1.7282E-02	0.0006	16.6600	9.9889E-03	0.0008
8.7380	2.3004E-02	0.0006	13.3990	1.6959E-02	0.0006	16.8140	9.5065E-03	0.0008
9.0280	2.2746E-02	0.0006	13.5900	1.6638E-02	0.0006	16.9670	9.0165E-03	0.0008
9.3100	2.2479E-02	0.0006	13.7790	1.6302E-02	0.0006	17.1190	8.5084E-03	0.0008
9.5830	2.2177E-02	0.0006	13.9650	1.5977E-02	0.0006	17.2690	7.9681E-03	0.0008
9.8480	2.1909E-02	0.0006	14.1480	1.5653E-02	0.0006	17.4170	7.3953E-03	0.0008
10.1070	2.1611E-02	0.0006	14.3300	1.5310E-02	0.0007	17.5650	6.7702E-03	0.0009
10.3590	2.1318E-02	0.0006	14.5080	1.4979E-02	0.0007	17.7110	6.1070E-03	0.0009
10.6050	2.1012E-02	0.0006	14.6850	1.4628E-02	0.0007	17.8560	5.3610E-03	0.0009
10.8460	2.0710E-02	0.0006	14.8600	1.4280E-02	0.0007	18.0000	4.4780E-03	0.0009
3.8 (minimum boundary)			z=132.160			to z=132.640		
4.4270	2.0484E-02	0.0008	11.0810	2.0280E-02	0.0007	15.0320	1.3986E-02	0.0007
4.9760	2.2845E-02	0.0008	11.3110	1.9976E-02	0.0007	15.2030	1.3646E-02	0.0007
5.4700	2.3687E-02	0.0008	11.5370	1.9689E-02	0.0007	15.3720	1.3301E-02	0.0007
5.9230	2.4029E-02	0.0007	11.7590	1.9398E-02	0.0007	15.5390	1.2922E-02	0.0007
6.3430	2.4093E-02	0.0007	11.9760	1.9069E-02	0.0007	15.7040	1.2562E-02	0.0007
6.7380	2.4060E-02	0.0007	12.1890	1.8768E-02	0.0007	15.8670	1.2203E-02	0.0008
7.1100	2.3950E-02	0.0007	12.3990	1.8458E-02	0.0007	16.0290	1.1802E-02	0.0008
7.4640	2.3794E-02	0.0007	12.6060	1.8167E-02	0.0007	16.1890	1.1417E-02	0.0008
7.8020	2.3567E-02	0.0007	12.8090	1.7850E-02	0.0007	16.3480	1.1019E-02	0.0008
8.1260	2.3323E-02	0.0007	13.0080	1.7552E-02	0.0007	16.5050	1.0583E-02	0.0008
8.4380	2.3099E-02	0.0007	13.2050	1.7264E-02	0.0007	16.6600	1.0143E-02	0.0008
8.7380	2.2859E-02	0.0007	13.3990	1.6949E-02	0.0007	16.8140	9.6808E-03	0.0008
9.0280	2.2587E-02	0.0007	13.5900	1.6621E-02	0.0007	16.9670	9.2041E-03	0.0008
9.3100	2.2300E-02	0.0007	13.7790	1.6281E-02	0.0007	17.1190	8.6919E-03	0.0008
9.5830	2.2014E-02	0.0007	13.9650	1.5950E-02	0.0007	17.2690	8.1592E-03	0.0009
9.8480	2.1732E-02	0.0007	14.1480	1.5641E-02	0.0007	17.4170	7.5812E-03	0.0009
10.1070	2.1437E-02	0.0007	14.3300	1.5320E-02	0.0007	17.5650	6.9666E-03	0.0009
10.3590	2.1147E-02	0.0007	14.5080	1.4999E-02	0.0007	17.7110	6.2965E-03	0.0009
10.6050	2.0845E-02	0.0007	14.6850	1.4661E-02	0.0007	17.8560	5.5468E-03	0.0009
10.8460	2.0570E-02	0.0007	14.8600	1.4320E-02	0.0007	18.0000	4.6525E-03	0.0009
3.8 (minimum boundary)			z=132.640			to z=133.120		
4.4270	2.0970E-02	0.0008	11.0810	2.0111E-02	0.0007	15.0320	1.4035E-02	0.0008
4.9760	2.3024E-02	0.0008	11.3110	1.9821E-02	0.0007	15.2030	1.3722E-02	0.0008
5.4700	2.3728E-02	0.0008	11.5370	1.9536E-02	0.0007	15.3720	1.3374E-02	0.0008
5.9230	2.3941E-02	0.0008	11.7590	1.9260E-02	0.0007	15.5390	1.3051E-02	0.0008
6.3430	2.4039E-02	0.0008	11.9760	1.8979E-02	0.0007	15.7040	1.2698E-02	0.0008
6.7380	2.3955E-02	0.0008	12.1890	1.8682E-02	0.0007	15.8670	1.2336E-02	0.0008
7.1100	2.3772E-02	0.0008	12.3990	1.8383E-02	0.0007	16.0290	1.1954E-02	0.0008
7.4640	2.3584E-02	0.0007	12.6060	1.8082E-02	0.0007	16.1890	1.1569E-02	0.0008
7.8020	2.3348E-02	0.0007	12.8090	1.7765E-02	0.0007	16.3480	1.1162E-02	0.0008
8.1260	2.3110E-02	0.0007	13.0080	1.7489E-02	0.0007	16.5050	1.0755E-02	0.0008
8.4380	2.2868E-02	0.0007	13.2050	1.7175E-02	0.0007	16.6600	1.0310E-02	0.0008
8.7380	2.2641E-02	0.0007	13.3990	1.6867E-02	0.0007	16.8140	9.8826E-03	0.0009
9.0280	2.2363E-02	0.0007	13.5900	1.6578E-02	0.0007	16.9670	9.4157E-03	0.0009
9.3100	2.2088E-02	0.0007	13.7790	1.6280E-02	0.0007	17.1190	8.8989E-03	0.0009
9.5830	2.1819E-02	0.0007	13.9650	1.5956E-02	0.0007	17.2690	8.3815E-03	0.0009
9.8480	2.1541E-02	0.0007	14.1480	1.5634E-02	0.0007	17.4170	7.8179E-03	0.0009
10.1070	2.1276E-02	0.0007	14.3300	1.5325E-02	0.0007	17.5650	7.2169E-03	0.0009
10.3590	2.0973E-02	0.0007	14.5080	1.5026E-02	0.0007	17.7110	6.5480E-03	0.0010

Table C-3. Radial distributions of fission neutrons (cont)

Radial layer outer boundary (cm)	Layer probability	Rel. error	Radial layer outer boundary (cm)	Layer probability	Rel. error	Radial layer outer boundary (cm)	Layer probability	Rel. error
10.6050	2.0700E-02	0.0007	14.6850	1.4701E-02	0.0008	17.8560	5.8111E-03	0.0010
10.8460	2.0407E-02	0.0007	14.8600	1.4361E-02	0.0008	18.0000	4.9037E-03	0.0010
3.8 (minimum boundary)			z=133.120			to z=133.600		
4.4270	2.1743E-02	0.0009	11.0810	1.9907E-02	0.0008	15.0320	1.4138E-02	0.0008
4.9760	2.3343E-02	0.0009	11.3110	1.9635E-02	0.0008	15.2030	1.3804E-02	0.0008
5.4700	2.3771E-02	0.0009	11.5370	1.9357E-02	0.0008	15.3720	1.3471E-02	0.0008
5.9230	2.3868E-02	0.0008	11.7590	1.9089E-02	0.0008	15.5390	1.3157E-02	0.0008
6.3430	2.3815E-02	0.0008	11.9760	1.8810E-02	0.0008	15.7040	1.2838E-02	0.0008
6.7380	2.3702E-02	0.0008	12.1890	1.8523E-02	0.0008	15.8670	1.2485E-02	0.0008
7.1100	2.3510E-02	0.0008	12.3990	1.8223E-02	0.0008	16.0290	1.2113E-02	0.0009
7.4640	2.3308E-02	0.0008	12.6060	1.7935E-02	0.0008	16.1890	1.1748E-02	0.0009
7.8020	2.3078E-02	0.0008	12.8090	1.7647E-02	0.0008	16.3480	1.1384E-02	0.0009
8.1260	2.2842E-02	0.0008	13.0080	1.7388E-02	0.0008	16.5050	1.0986E-02	0.0009
8.4380	2.2609E-02	0.0008	13.2050	1.7111E-02	0.0008	16.6600	1.0579E-02	0.0009
8.7380	2.2330E-02	0.0008	13.3990	1.6823E-02	0.0008	16.8140	1.0145E-02	0.0009
9.0280	2.2088E-02	0.0008	13.5900	1.6533E-02	0.0008	16.9670	9.6923E-03	0.0009
9.3100	2.1810E-02	0.0008	13.7790	1.6264E-02	0.0008	17.1190	9.2125E-03	0.0009
9.5830	2.1543E-02	0.0008	13.9650	1.5945E-02	0.0008	17.2690	8.7040E-03	0.0010
9.8480	2.1258E-02	0.0008	14.1480	1.5635E-02	0.0008	17.4170	8.1589E-03	0.0010
10.1070	2.1013E-02	0.0008	14.3300	1.5351E-02	0.0008	17.5650	7.5721E-03	0.0010
10.3590	2.0743E-02	0.0008	14.5080	1.5065E-02	0.0008	17.7110	6.9065E-03	0.0010
10.6050	2.0466E-02	0.0008	14.6850	1.4756E-02	0.0008	17.8560	6.1702E-03	0.0010
10.8460	2.0180E-02	0.0008	14.8600	1.4453E-02	0.0008	18.0000	5.2637E-03	0.0010
3.8 (minimum boundary)			z=133.600			to z=134.080		
4.4270	2.2966E-02	0.0010	11.0810	1.9623E-02	0.0009	15.0320	1.4221E-02	0.0009
4.9760	2.3668E-02	0.0010	11.3110	1.9337E-02	0.0009	15.2030	1.3929E-02	0.0009
5.4700	2.3757E-02	0.0010	11.5370	1.9089E-02	0.0009	15.3720	1.3650E-02	0.0009
5.9230	2.3659E-02	0.0009	11.7590	1.8830E-02	0.0009	15.5390	1.3332E-02	0.0009
6.3430	2.3539E-02	0.0009	11.9760	1.8564E-02	0.0009	15.7040	1.3032E-02	0.0009
6.7380	2.3334E-02	0.0009	12.1890	1.8319E-02	0.0009	15.8670	1.2708E-02	0.0009
7.1100	2.3126E-02	0.0009	12.3990	1.8038E-02	0.0009	16.0290	1.2382E-02	0.0009
7.4640	2.2867E-02	0.0009	12.6060	1.7768E-02	0.0009	16.1890	1.2034E-02	0.0009
7.8020	2.2661E-02	0.0009	12.8090	1.7513E-02	0.0009	16.3480	1.1687E-02	0.0010
8.1260	2.2467E-02	0.0009	13.0080	1.7257E-02	0.0009	16.5050	1.1329E-02	0.0010
8.4380	2.2180E-02	0.0009	13.2050	1.6984E-02	0.0009	16.6600	1.0956E-02	0.0010
8.7380	2.1919E-02	0.0009	13.3990	1.6695E-02	0.0009	16.8140	1.0542E-02	0.0010
9.0280	2.1671E-02	0.0009	13.5900	1.6454E-02	0.0009	16.9670	1.0136E-02	0.0010
9.3100	2.1406E-02	0.0009	13.7790	1.6166E-02	0.0009	17.1190	9.6719E-03	0.0010
9.5830	2.1157E-02	0.0009	13.9650	1.5891E-02	0.0009	17.2690	9.1946E-03	0.0010
9.8480	2.0925E-02	0.0009	14.1480	1.5638E-02	0.0009	17.4170	8.6657E-03	0.0011
10.1070	2.0654E-02	0.0009	14.3300	1.5357E-02	0.0009	17.5650	8.1065E-03	0.0011
10.3590	2.0390E-02	0.0009	14.5080	1.5071E-02	0.0009	17.7110	7.4924E-03	0.0011
10.6050	2.0151E-02	0.0009	14.6850	1.4797E-02	0.0009	17.8560	6.7706E-03	0.0011
10.8460	1.9886E-02	0.0009	14.8600	1.4514E-02	0.0009	18.0000	5.8728E-03	0.0011
3.8 (minimum boundary)			z=134.080			to z=134.560		
4.4270	2.5090E-02	0.0010	11.0810	1.9099E-02	0.0010	15.0320	1.4396E-02	0.0010
4.9760	2.3905E-02	0.0011	11.3110	1.8867E-02	0.0010	15.2030	1.4137E-02	0.0010
5.4700	2.3420E-02	0.0011	11.5370	1.8641E-02	0.0010	15.3720	1.3892E-02	0.0010
5.9230	2.3152E-02	0.0011	11.7590	1.8413E-02	0.0010	15.5390	1.3610E-02	0.0010
6.3430	2.2883E-02	0.0010	11.9760	1.8160E-02	0.0010	15.7040	1.3345E-02	0.0010

Table C-3. Radial distributions of fission neutrons (cont)

Radial layer outer boundary (cm)	Layer probability	Rel. error	Radial layer outer boundary (cm)	Layer probability	Rel. error	Radial layer outer boundary (cm)	Layer probability	Rel. error
6.7380	2.2701E-02	0.0010	12.1890	1.7945E-02	0.0010	15.8670	1.3098E-02	0.0010
7.1100	2.2388E-02	0.0010	12.3990	1.7692E-02	0.0010	16.0290	1.2834E-02	0.0010
7.4640	2.2150E-02	0.0010	12.6060	1.7478E-02	0.0010	16.1890	1.2526E-02	0.0011
7.8020	2.1914E-02	0.0010	12.8090	1.7244E-02	0.0010	16.3480	1.2231E-02	0.0011
8.1260	2.1666E-02	0.0010	13.0080	1.6993E-02	0.0010	16.5050	1.1915E-02	0.0011
8.4380	2.1438E-02	0.0010	13.2050	1.6777E-02	0.0010	16.6600	1.1604E-02	0.0011
8.7380	2.1200E-02	0.0010	13.3990	1.6530E-02	0.0010	16.8140	1.1281E-02	0.0011
9.0280	2.0926E-02	0.0010	13.5900	1.6311E-02	0.0010	16.9670	1.0927E-02	0.0011
9.3100	2.0692E-02	0.0010	13.7790	1.6078E-02	0.0010	17.1190	1.0528E-02	0.0011
9.5830	2.0491E-02	0.0010	13.9650	1.5837E-02	0.0010	17.2690	1.0113E-02	0.0011
9.8480	2.0258E-02	0.0010	14.1480	1.5608E-02	0.0010	17.4170	9.6876E-03	0.0011
10.1070	2.0021E-02	0.0010	14.3300	1.5366E-02	0.0010	17.5650	9.2067E-03	0.0011
10.3590	1.9809E-02	0.0010	14.5080	1.5121E-02	0.0010	17.7110	8.6698E-03	0.0012
10.6050	1.9555E-02	0.0010	14.6850	1.4889E-02	0.0010	17.8560	8.0624E-03	0.0012
10.8460	1.9339E-02	0.0010	14.8600	1.4637E-02	0.0010	18.0000	7.2545E-03	0.0011

APPENDIX D: TLD PHOTON DOSE RESPONSE FUNCTION

D.1 TLD Photon Dose Response Function

The response function used to model the TLD absorbed dose (Figure 4-13) was taken from SCALE 6.2, which is based on data in ICRU-57 Table A-2. This response function is a set of flux-to-dose conversion factors, where the dose is actually kerma in air. There are a few important differences between the values used in the benchmark simulations and SCALE 6.2. Furthermore, there are some differences between the values in SCALE 6.2 and ICRU-57.

The difference between the response used in the benchmark simulations and SCALE 6.2 are the upper and lower cutoff energies. In SCALE 6.2 the upper and lower cutoff energies are 20 MeV and 10 keV, respectively. In the benchmark simulations, these have been changed to 50 MeV and 1 keV. The value of the response function at 20 MeV is applied for all energies between 20 and 50 MeV. Similarly, the value of the response function at 10 keV is applied for all energies between 10 and 1 keV.

The values of this response function in ICRU-57 are actually energy and response pairs. The response function is defined at specific points, and the user typically interpolates between the points to find values of the response function at other energies. Furthermore, the maximum energy define in ICRU-57 is 10 MeV. SCALE 6.2 has extrapolated the data provided in ICRU-57 to provide response function data up to 20 MeV. Then SCALE 6.2 created a multi-group representation of the response function assuming that linear interpolation should be used between all data points.

Since this is a set of air kerma flux-to-dose conversion factors, it is usually more appropriate not to model the actual dosimeter and instead model a volume of air. The evaluators have determined for this benchmark that the CEA Al_2O_3 TLD body and powder do not have a statistically significant impact on the simulations, so the TLD geometry may or may not be included in the benchmark model geometry without any negative effects.

Numerical values of the data plotted in Figure 4-13 are provided in Table D-1.

Table D-1. Benchmark model representation of the ICRU-57 Air kerma flux-to-dose conversion factors

Upper energy boundary (MeV)	Response function	Upper energy boundary (MeV)	Response function	Upper energy boundary (MeV)	Response function	Upper energy boundary (MeV)	Response function
50.000	1.1951E-07	4.000	4.1435E-08	1.330	1.9515E-08	0.200	2.6207E-09
20.000	1.1951E-07	3.500	3.7637E-08	1.200	1.7427E-08	0.150	1.7495E-09
14.000	1.0043E-07	3.000	3.4683E-08	1.000	1.5428E-08	0.100	1.2158E-09
12.000	8.8460E-08	2.750	3.2756E-08	0.900	1.4024E-08	0.075	1.0891E-09
10.000	7.6856E-08	2.500	3.1096E-08	0.800	1.2573E-08	0.070	1.0678E-09
8.000	6.8703E-08	2.350	2.9502E-08	0.700	1.1043E-08	0.060	1.1534E-09
7.500	6.5611E-08	2.150	2.7799E-08	0.600	9.5032E-09	0.045	1.7983E-09
7.000	6.2298E-08	2.000	2.6119E-08	0.512	8.7655E-09	0.030	4.0914E-09
6.500	5.8730E-08	1.800	2.4498E-08	0.510	8.2314E-09	0.020	1.1697E-08
6.000	5.5245E-08	1.660	2.3309E-08	0.450	7.2691E-09	0.001 (minimum energy)	
5.500	5.1825E-08	1.570	2.2428E-08	0.400	5.8857E-09		
5.000	4.8423E-08	1.500	2.1733E-08	0.300	4.6349E-09		
4.500	4.5003E-08	1.440	2.0851E-08	0.260	3.6917E-09		

APPENDIX E: GRAPHICAL COMPARISON BETWEEN CALCULATION AND EXPERIMENT

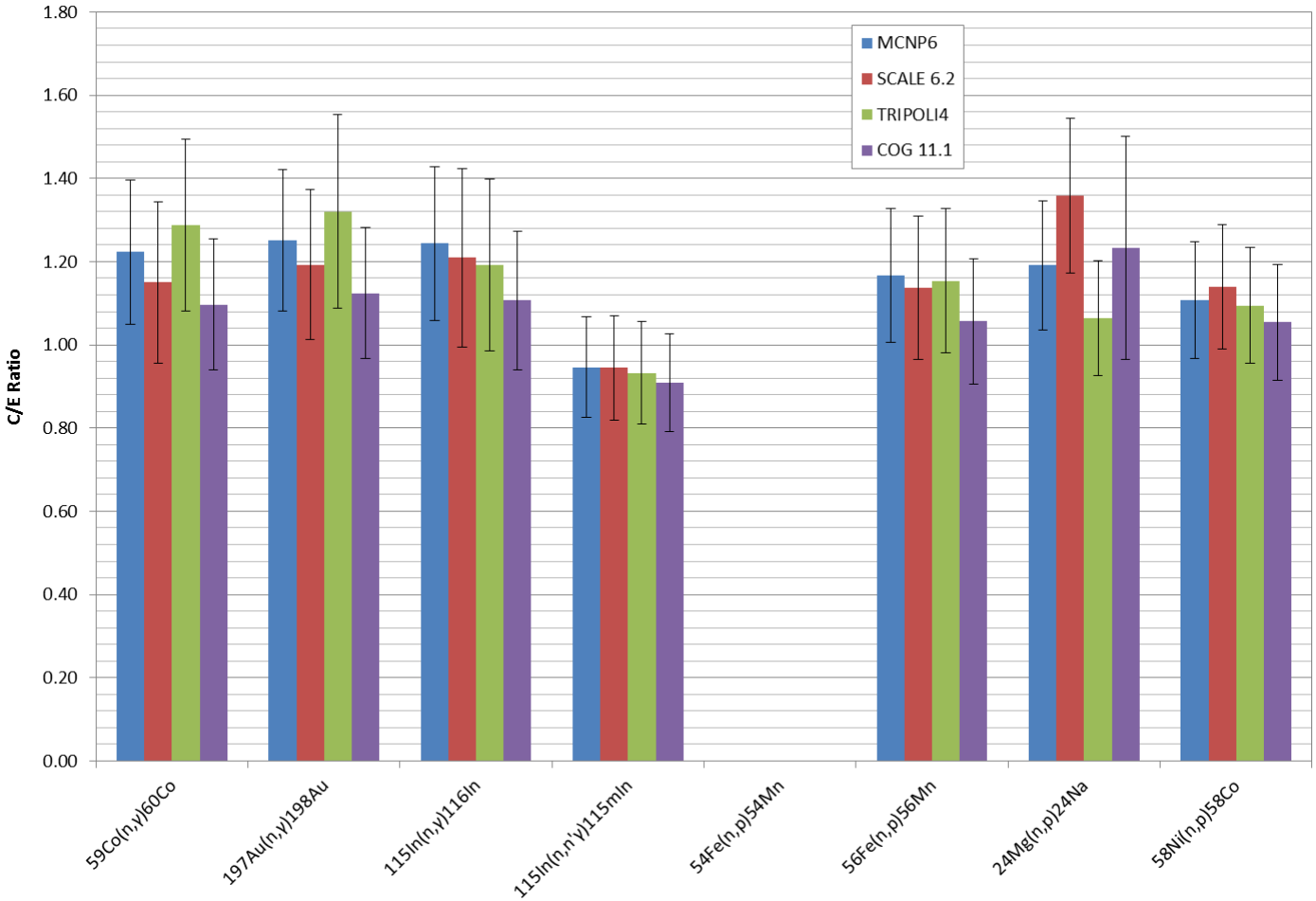

Figure E-1. Case 1 collimator A neutron activation foil code-to-code comparison of C/E ratios with 2-sigma error bars.

ALARM-TRAN-PB-SHIELD-001

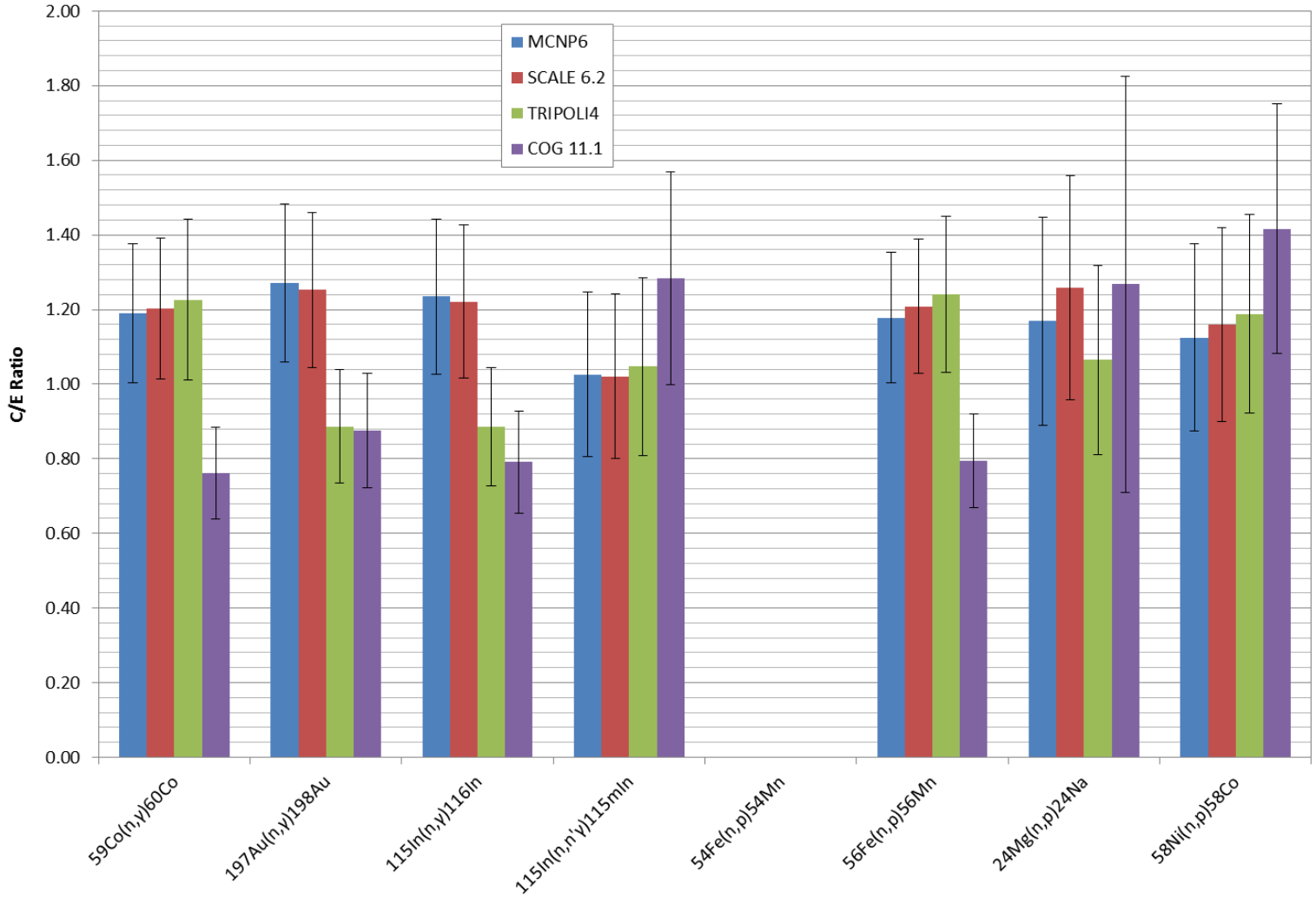

Figure E-2. Case 2 collimator B neutron activation foil code-to-code comparison of C/E ratios with 2-sigma error bars.

ALARM-TRAN-PB-SHIELD-001

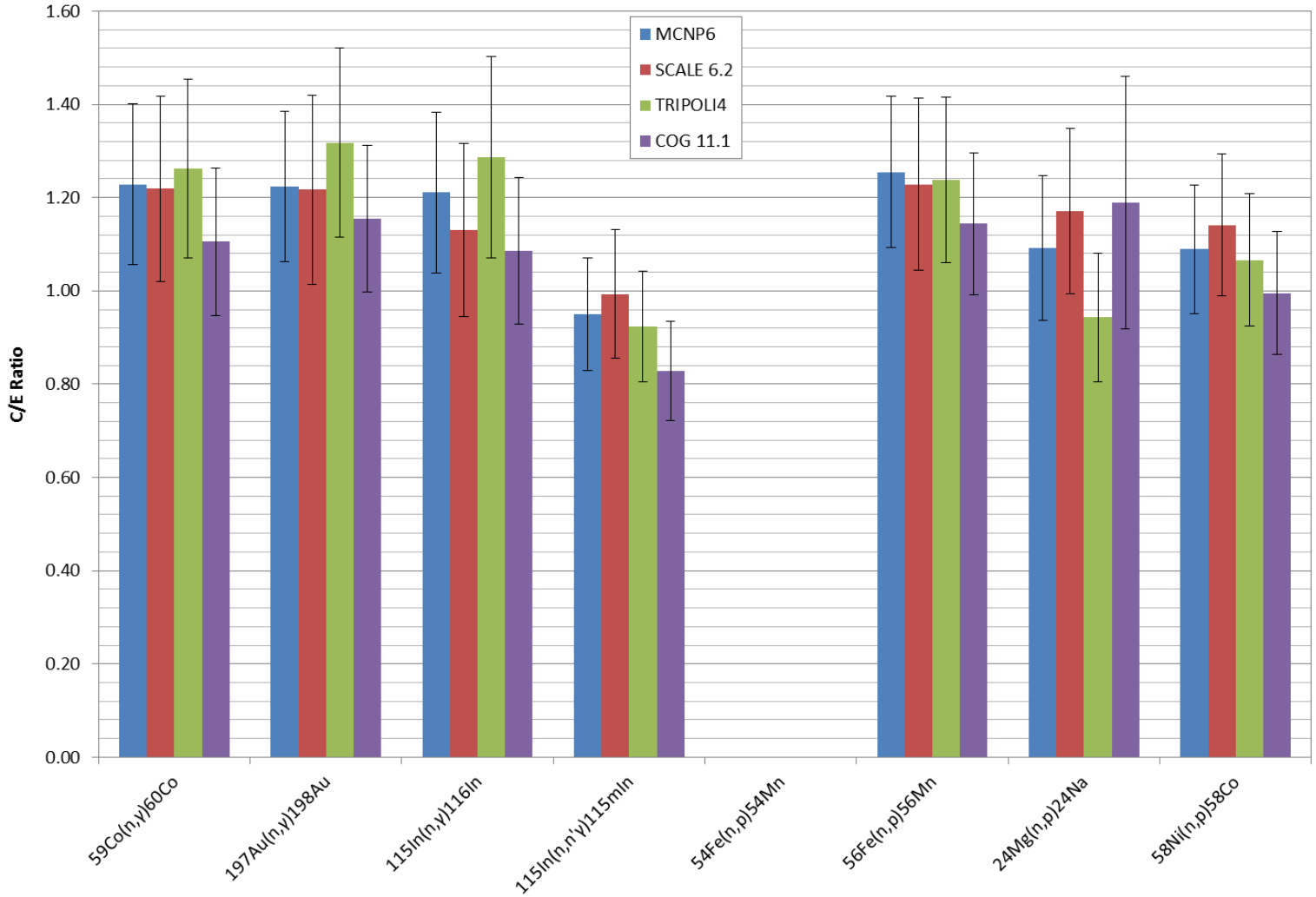

Figure E-3. Case 3 free field location neutron activation foil code-to-code comparison of C/E ratios with 2-sigma error bars.

ALARM-TRAN-PB-SHIELD-001

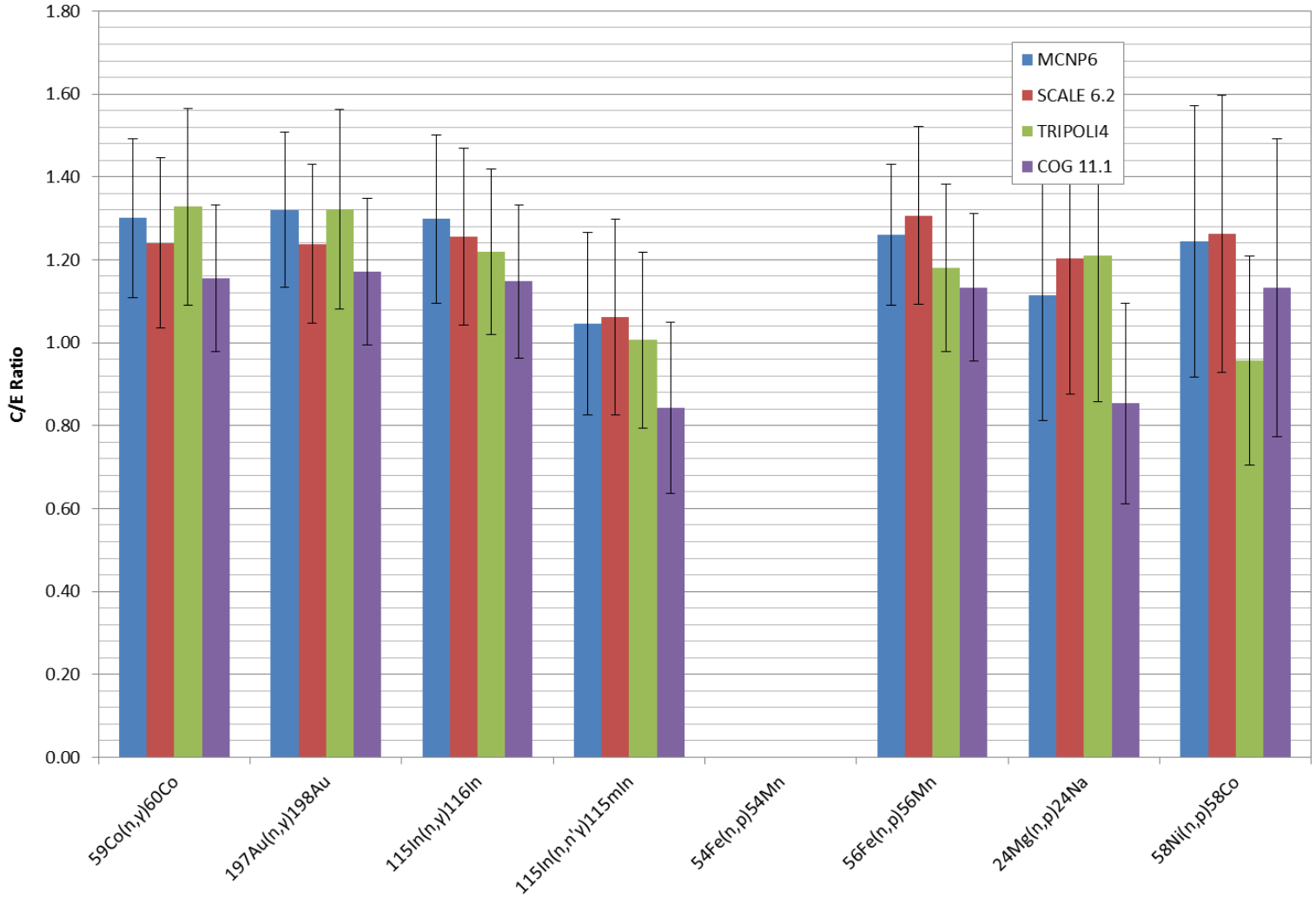

Figure E-4. Case 4 scattering box position 1 neutron activation foil code-to-code comparison of C/E ratios with 2-sigma error bars.

ALARM-TRAN-PB-SHIELD-001

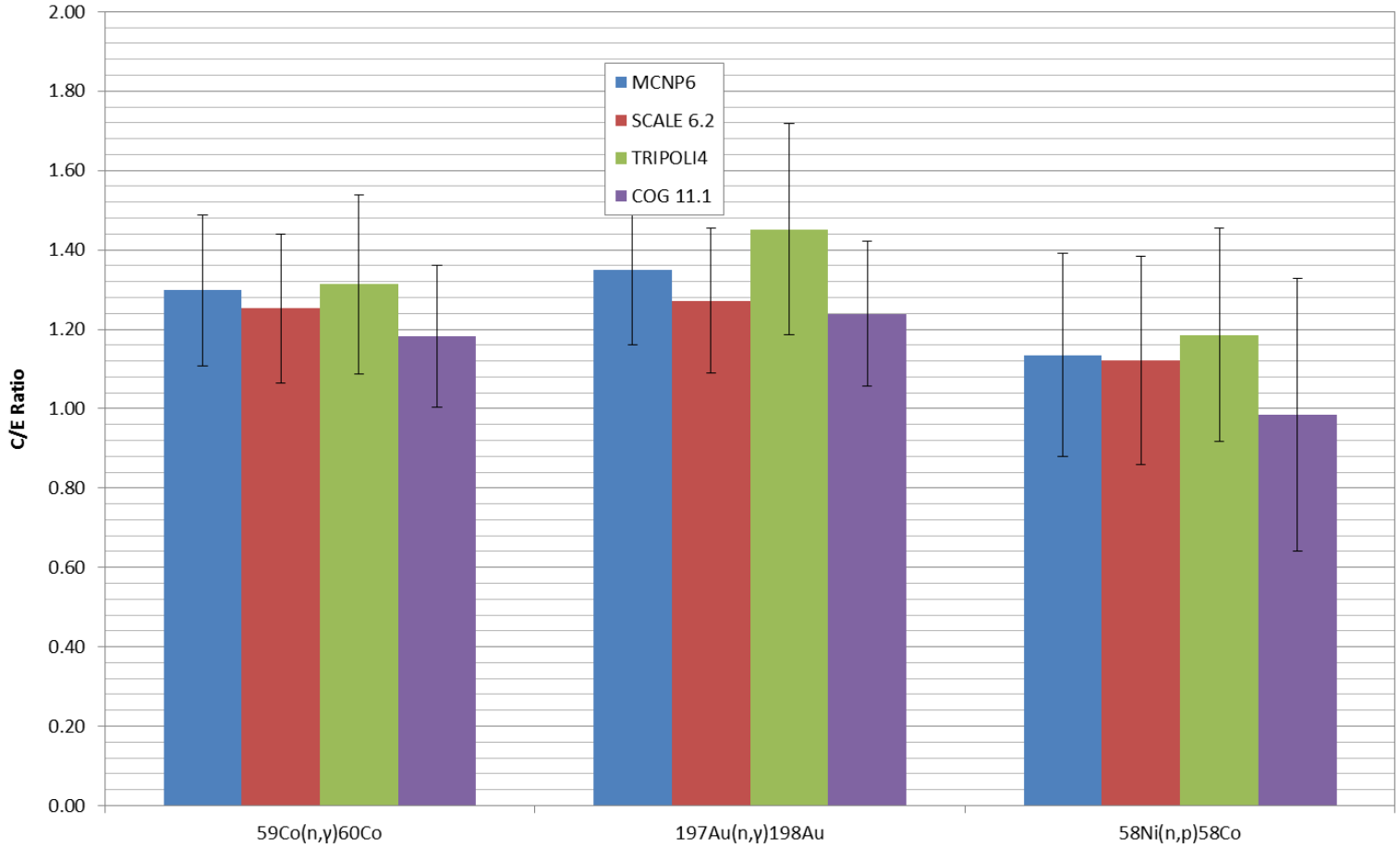

Figure E-5. Case 5 scattering box position 2 neutron activation foil code-to-code comparison of C/E ratios with 2-sigma error bars.

ALARM-TRAN-PB-SHIELD-001

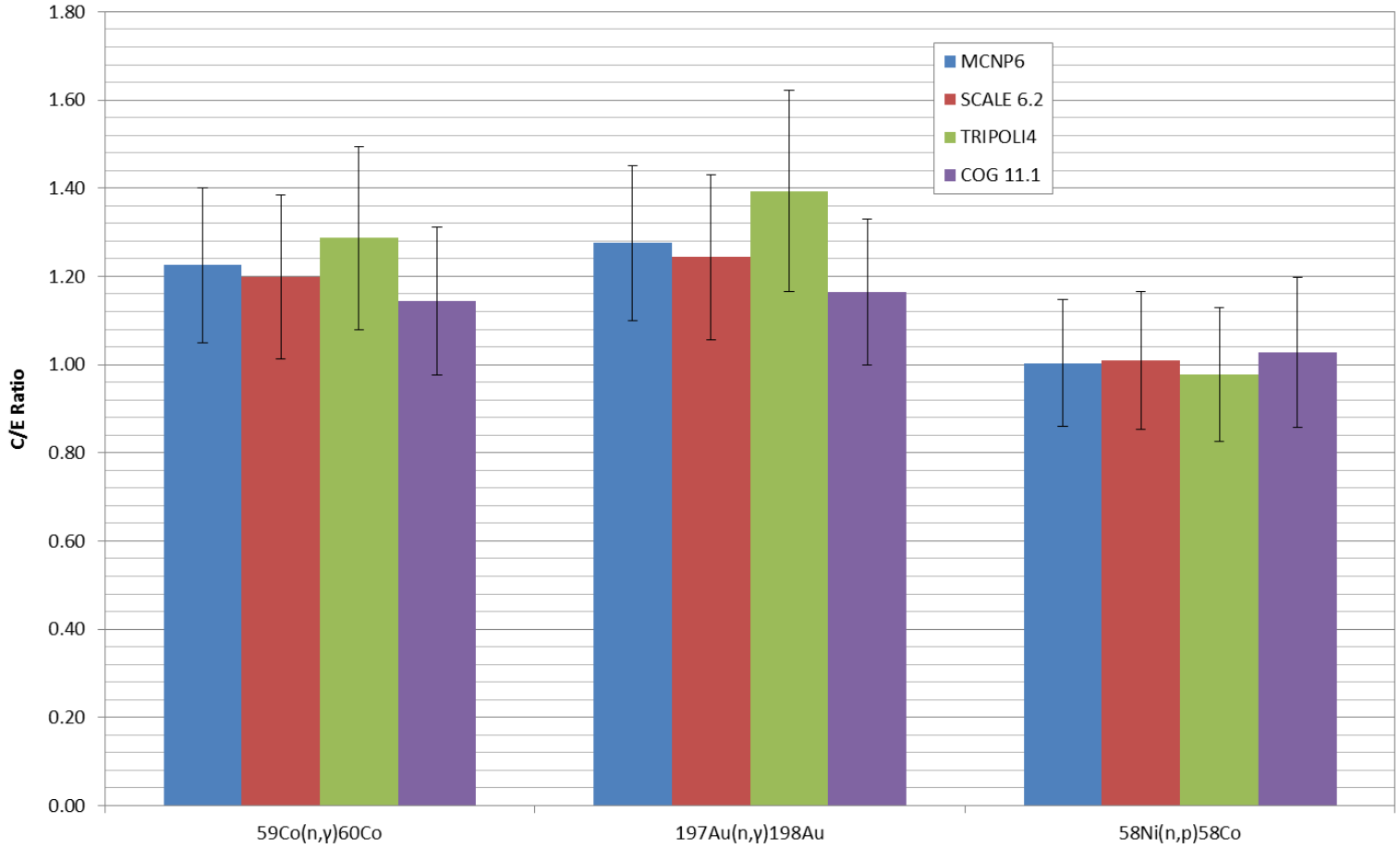

Figure E-6. case 6 scattering box position 3 neutron activation foil code-to-code comparison of C/E ratios with 2-sigma error bars.

ALARM-TRAN-PB-SHIELD-001

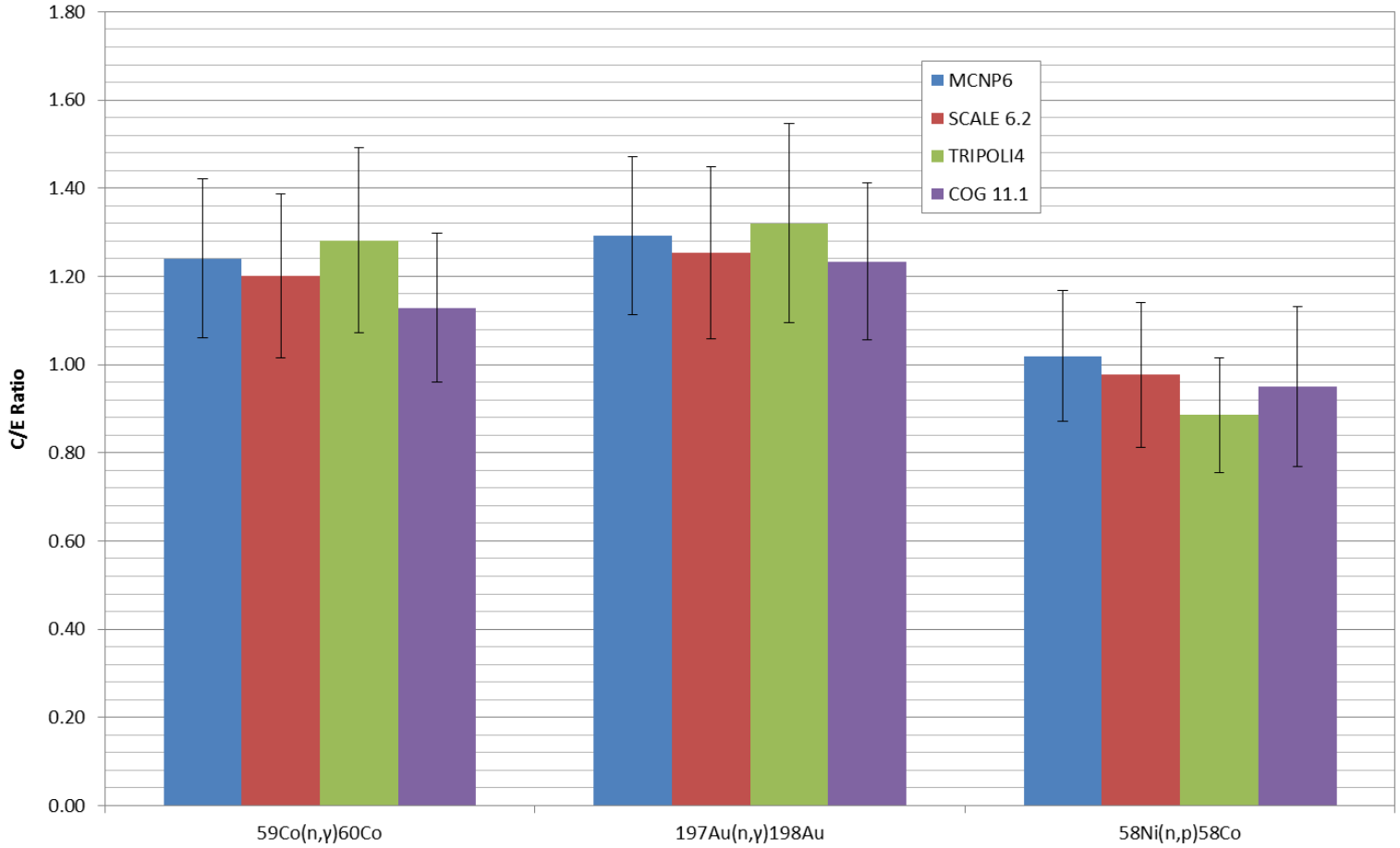

Figure E-7. Case 7 scattering box position 4 neutron activation foil code-to-code comparison of C/E ratios with 2-sigma error bars.

ALARM-TRAN-PB-SHIELD-001

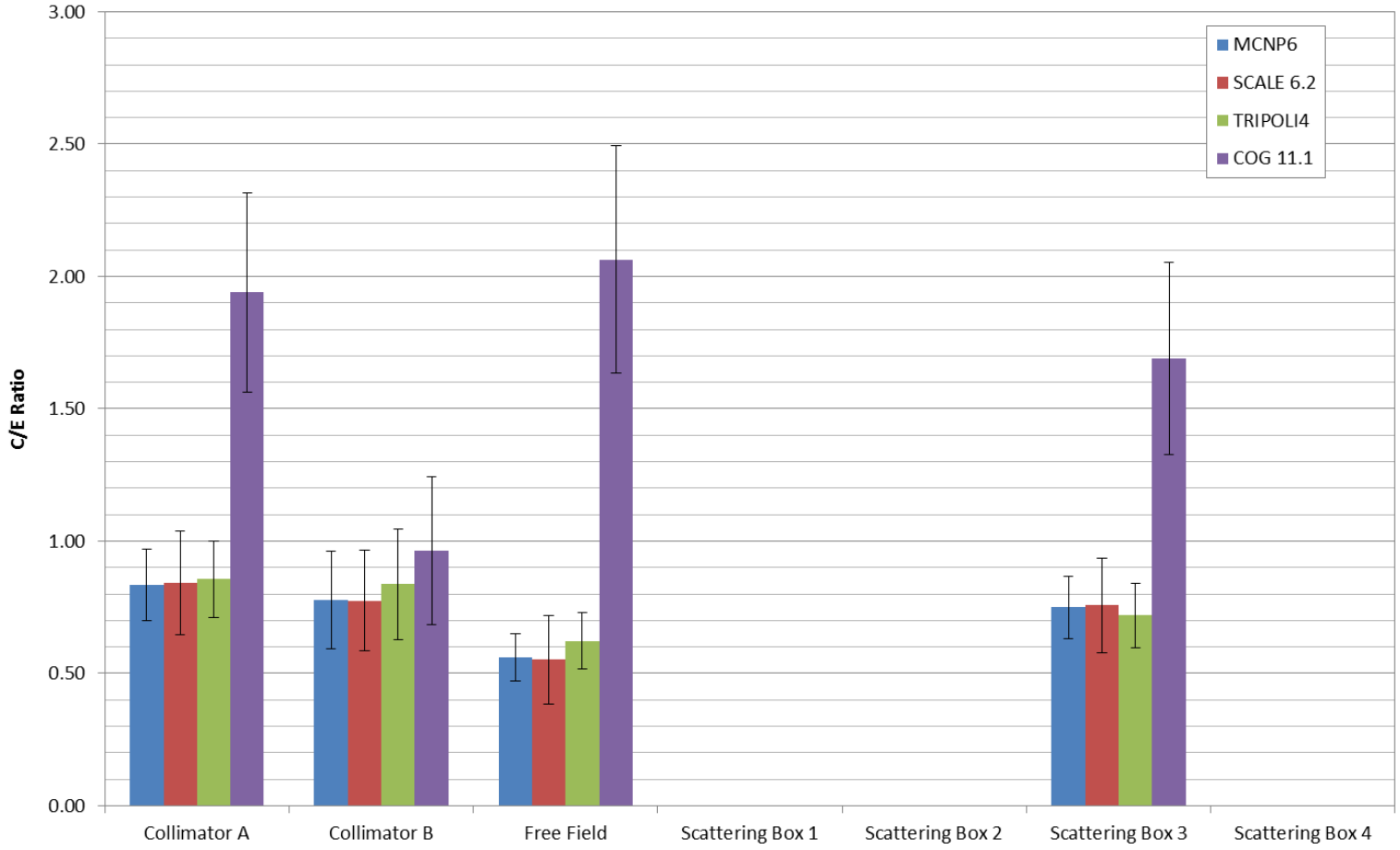

Figure E-8. All Al_2O_3 TLD code-to-code comparison of C/E ratios with 2-sigma error bars (all cases).

APPENDIX F: LEAKAGE RESULTS FROM SIMULATION

F.1 Neutron and Photon Leakage from Lead Shield

The leakage of neutrons and photons from the radial surface of the lead shield were tallied in the first calculation of the MCNP two-step computational sequence. The neutron and photon leakage are plotted in Figure F-1 and Figure F-2, respectively. The numerical values of these plots, along with the relative errors, follow in Table F-1 and Table F-2.

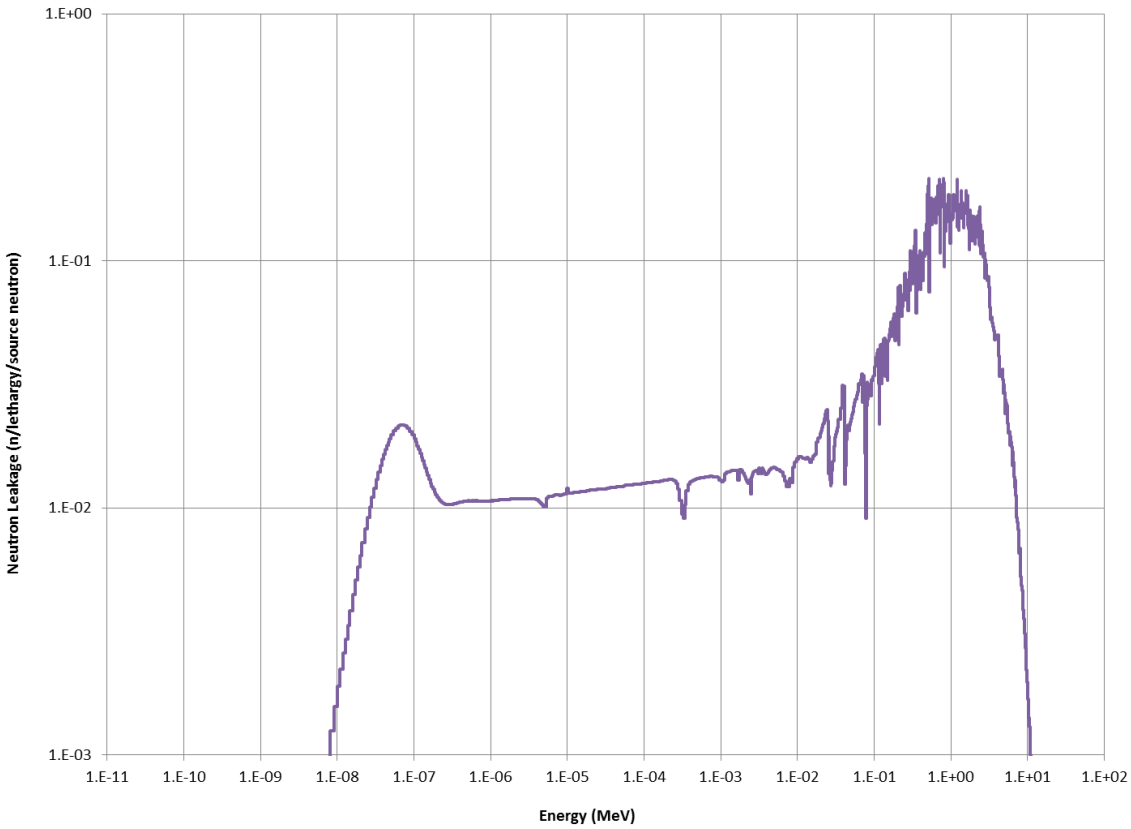

Figure F-1. Neutron leakage from radial surface of lead shield calculated with MCNP6 using ENDF/B-VII.1 cross section data (.80c).

ALARM-TRAN-PB-SHIELD-001

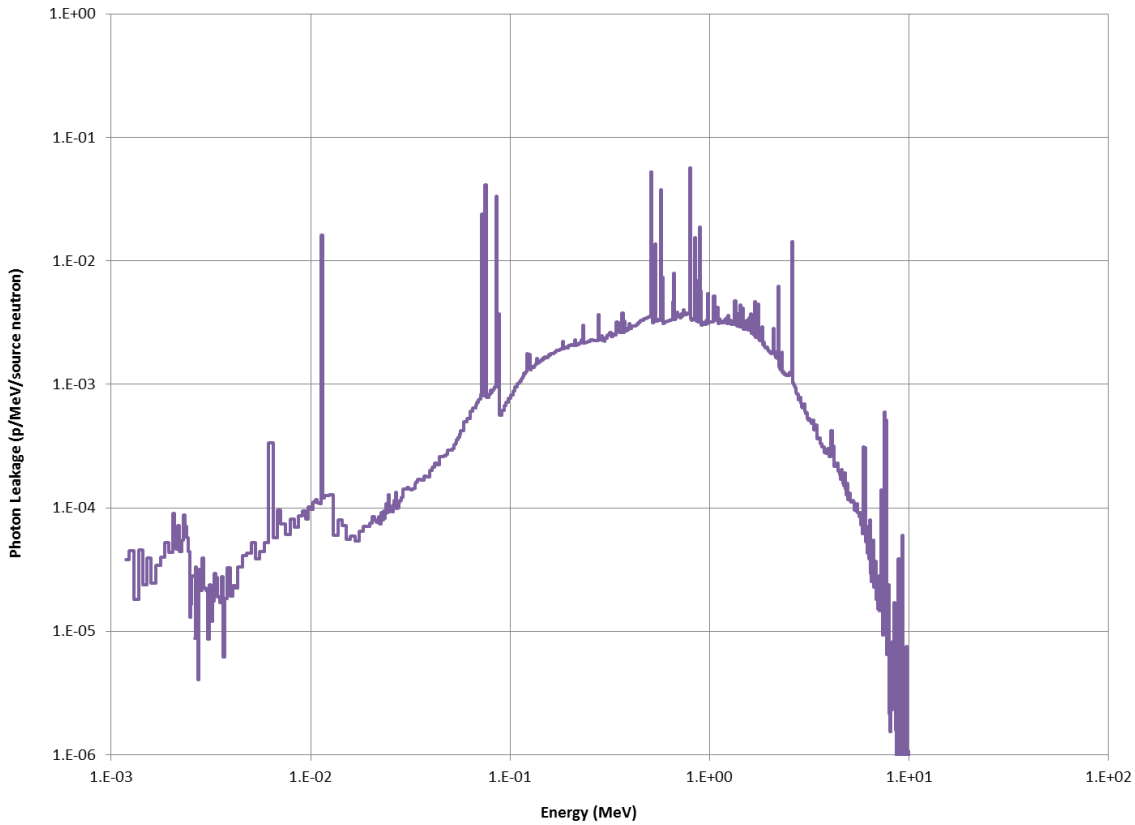

Figure F-2. Photon leakage from radial surface of lead shield calculated with MCNP6 using ENDF/B-VII.1 cross section data (.80c).

Table F-1. Neutron leakage from radial surface of lead shield and relative errors (cont)

Group upper energy (MeV)	Leakage	Rel. err.	Group upper energy (MeV)	Leakage	Rel. err.	Group upper energy (MeV)	Leakage	Rel. err.
2.6000E+01	2.4359E-09	0.3116	8.3769E-01	7.4838E-04	0.0004	3.4252E-03	1.2440E-04	0.0010
2.4000E+01	6.6362E-09	0.1819	8.2927E-01	5.9511E-04	0.0005	3.3546E-03	1.1802E-04	0.0010
2.2000E+01	4.4279E-08	0.0703	8.2085E-01	4.0148E-04	0.0006	3.2908E-03	1.2238E-04	0.0010
2.0000E+01	2.5397E-09	0.2594	8.1284E-01	8.9463E-04	0.0004	3.2269E-03	1.2545E-04	0.0010
1.9928E+01	5.0241E-09	0.1996	8.0484E-01	9.3768E-04	0.0004	3.1631E-03	1.2870E-04	0.0010
1.9856E+01	4.5174E-09	0.2361	7.9683E-01	8.9952E-04	0.0004	3.0992E-03	1.2396E-04	0.0010
1.9784E+01	4.6634E-09	0.2054	7.8883E-01	8.7204E-04	0.0004	3.0354E-03	1.1819E-04	0.0010
1.9712E+01	3.0764E-09	0.2556	7.8082E-01	8.3915E-04	0.0004	2.9776E-03	1.2043E-04	0.0010
1.9640E+01	4.0774E-08	0.0742	7.7320E-01	7.0833E-04	0.0004	2.9198E-03	1.2304E-04	0.0010
1.9178E+01	4.8888E-08	0.0657	7.6559E-01	8.7988E-04	0.0004	2.8621E-03	1.2562E-04	0.0010
1.8717E+01	7.0036E-08	0.0554	7.5797E-01	7.8799E-04	0.0004	2.8043E-03	1.2766E-04	0.0010
1.8255E+01	9.5466E-08	0.0471	7.5036E-01	8.1580E-04	0.0004	2.7465E-03	5.9998E-05	0.0014
1.7794E+01	1.3995E-07	0.0391	7.4274E-01	7.8360E-04	0.0004	2.7197E-03	6.0109E-05	0.0014
1.7332E+01	3.3875E-08	0.0781	7.3549E-01	6.7890E-04	0.0005	2.6929E-03	6.0266E-05	0.0014
1.7247E+01	3.8269E-08	0.0721	7.2825E-01	4.6617E-04	0.0005	2.6662E-03	6.0746E-05	0.0014
1.7161E+01	3.3666E-08	0.0771	7.2100E-01	6.7739E-04	0.0005	2.6394E-03	6.1078E-05	0.0014
1.7076E+01	3.9456E-08	0.0705	7.1376E-01	9.4924E-04	0.0004	2.6126E-03	5.8049E-05	0.0014

ALARM-TRAN-PB-SHIELD-001

Table F-1. Neutron leakage from radial surface of lead shield and relative errors (cont)

Group upper energy (MeV)	Leakage	Rel. err.	Group upper energy (MeV)	Leakage	Rel. err.	Group upper energy (MeV)	Leakage	Rel. err.
1.6990E+01	4.0885E-08	0.0660	7.0651E-01	7.9760E-04	0.0004	2.5871E-03	5.8313E-05	0.0014
1.6905E+01	4.1954E-08	0.0673	6.9962E-01	7.2637E-04	0.0004	2.5616E-03	5.7876E-05	0.0014
1.6821E+01	4.1605E-08	0.0681	6.9273E-01	8.0820E-04	0.0004	2.5362E-03	5.7092E-05	0.0014
1.6738E+01	5.2623E-08	0.0613	6.8584E-01	8.8401E-04	0.0004	2.5107E-03	5.1361E-05	0.0015
1.6654E+01	5.0562E-08	0.0607	6.7895E-01	7.8058E-04	0.0004	2.4852E-03	9.4666E-05	0.0011
1.6571E+01	5.4646E-08	0.0599	6.7206E-01	7.1888E-04	0.0004	2.4379E-03	1.1086E-04	0.0011
1.6487E+01	1.1506E-07	0.0426	6.6550E-01	7.4607E-04	0.0004	2.3906E-03	1.1098E-04	0.0011
1.6326E+01	1.3207E-07	0.0389	6.5895E-01	7.6916E-04	0.0004	2.3433E-03	1.1139E-04	0.0011
1.6165E+01	1.4867E-07	0.0367	6.5239E-01	6.7140E-04	0.0005	2.2960E-03	1.1449E-04	0.0010
1.6005E+01	1.7649E-07	0.0343	6.4584E-01	8.0262E-04	0.0004	2.2487E-03	1.0603E-04	0.0011
1.5844E+01	1.7912E-07	0.0337	6.3928E-01	6.0814E-04	0.0005	2.2059E-03	1.0945E-04	0.0011
1.5683E+01	1.8941E-07	0.0324	6.3304E-01	7.3844E-04	0.0004	2.1631E-03	1.1351E-04	0.0010
1.5530E+01	2.2453E-07	0.0297	6.2681E-01	7.6755E-04	0.0004	2.1203E-03	1.1779E-04	0.0010
1.5377E+01	2.5157E-07	0.0279	6.2057E-01	7.6597E-04	0.0004	2.0775E-03	1.2219E-04	0.0010
1.5224E+01	2.6788E-07	0.0271	6.1434E-01	6.5152E-04	0.0005	2.0347E-03	2.7205E-04	0.0007
1.5071E+01	2.8958E-07	0.0262	6.0810E-01	7.1567E-04	0.0004	1.9447E-03	2.9165E-04	0.0007
1.4918E+01	1.6248E-07	0.0339	6.0217E-01	7.4350E-04	0.0004	1.8547E-03	3.0902E-04	0.0007
1.4844E+01	1.5812E-07	0.0338	5.9624E-01	7.6832E-04	0.0004	1.7646E-03	2.9327E-04	0.0007
1.4771E+01	1.7038E-07	0.0330	5.9030E-01	7.5523E-04	0.0004	1.6746E-03	3.3871E-04	0.0007
1.4697E+01	1.7231E-07	0.0325	5.8437E-01	6.9244E-04	0.0005	1.5846E-03	2.7777E-04	0.0007
1.4624E+01	2.0376E-07	0.0303	5.7844E-01	6.7399E-04	0.0005	1.5145E-03	2.9149E-04	0.0007
1.4550E+01	2.1162E-07	0.0297	5.7280E-01	6.0314E-04	0.0005	1.4444E-03	3.0524E-04	0.0007
1.4478E+01	2.2629E-07	0.0287	5.6716E-01	6.2621E-04	0.0005	1.3743E-03	3.1894E-04	0.0007
1.4406E+01	2.2602E-07	0.0286	5.6151E-01	6.8094E-04	0.0005	1.3042E-03	3.3553E-04	0.0007
1.4335E+01	2.5146E-07	0.0271	5.5587E-01	7.9629E-04	0.0004	1.2341E-03	2.7440E-04	0.0007
1.4263E+01	2.5531E-07	0.0269	5.5023E-01	7.0584E-04	0.0005	1.1795E-03	2.8243E-04	0.0007
1.4191E+01	2.6054E-07	0.0267	5.4486E-01	6.3489E-04	0.0005	1.1249E-03	2.8009E-04	0.0007
1.4121E+01	2.7542E-07	0.0259	5.3950E-01	6.0789E-04	0.0005	1.0703E-03	2.8914E-04	0.0007
1.4051E+01	3.0630E-07	0.0245	5.3413E-01	4.5186E-04	0.0005	1.0157E-03	3.1101E-04	0.0007
1.3980E+01	3.1684E-07	0.0243	5.2877E-01	3.3073E-04	0.0006	9.6112E-04	2.5957E-04	0.0007
1.3910E+01	3.2869E-07	0.0238	5.2340E-01	7.4937E-04	0.0004	9.1860E-04	2.7447E-04	0.0007
1.3840E+01	3.4005E-07	0.0234	5.1829E-01	9.2897E-04	0.0004	8.7608E-04	2.8892E-04	0.0007
1.3772E+01	3.5078E-07	0.0228	5.1319E-01	8.7274E-04	0.0004	8.3356E-04	3.0219E-04	0.0007
1.3704E+01	3.8025E-07	0.0219	5.0808E-01	8.5729E-04	0.0004	7.9104E-04	3.2201E-04	0.0007
1.3635E+01	3.9226E-07	0.0219	5.0298E-01	8.2772E-04	0.0005	7.4852E-04	2.6317E-04	0.0007
1.3567E+01	4.1607E-07	0.0209	4.9787E-01	1.3982E-03	0.0004	7.1541E-04	2.7558E-04	0.0007
1.3499E+01	8.9130E-07	0.0149	4.8839E-01	1.1997E-03	0.0004	6.8229E-04	2.8830E-04	0.0007
1.3367E+01	9.5264E-07	0.0143	4.7892E-01	9.2785E-04	0.0004	6.4918E-04	3.0268E-04	0.0007
1.3235E+01	1.0495E-06	0.0136	4.6944E-01	1.1467E-03	0.0004	6.1606E-04	3.1858E-04	0.0007
1.3104E+01	1.1800E-06	0.0128	4.5997E-01	9.4607E-04	0.0004	5.8295E-04	2.6034E-04	0.0007
1.2972E+01	1.2499E-06	0.0125	4.5049E-01	9.0542E-04	0.0004	5.5716E-04	2.7207E-04	0.0007
1.2840E+01	6.5316E-07	0.0168	4.4192E-01	8.3538E-04	0.0004	5.3137E-04	2.8472E-04	0.0007
1.2777E+01	7.1025E-07	0.0160	4.3334E-01	7.2127E-04	0.0005	5.0558E-04	2.9799E-04	0.0007
1.2713E+01	7.2902E-07	0.0159	4.2477E-01	7.5672E-04	0.0004	4.7979E-04	3.1192E-04	0.0007
1.2650E+01	7.5792E-07	0.0155	4.1619E-01	7.5438E-04	0.0004	4.5400E-04	2.5475E-04	0.0008
1.2586E+01	7.5792E-07	0.0155	4.0762E-01	3.2578E-04	0.0006	4.3391E-04	2.6489E-04	0.0007
1.2523E+01	8.2711E-07	0.0149	4.0364E-01	3.5260E-04	0.0006	4.1383E-04	2.7559E-04	0.0007
1.2461E+01	8.6194E-07	0.0146	3.9967E-01	4.0675E-04	0.0006	3.9374E-04	2.8349E-04	0.0007
1.2399E+01	9.0241E-07	0.0143	3.9569E-01	4.8341E-04	0.0005	3.7366E-04	2.8214E-04	0.0007
1.2338E+01	9.4726E-07	0.0139	3.9172E-01	3.8351E-04	0.0006	3.5357E-04	2.0240E-04	0.0008
1.2276E+01	9.8883E-07	0.0136	3.8774E-01	3.2773E-04	0.0006	3.3793E-04	1.8678E-04	0.0009

ALARM-TRAN-PB-SHIELD-001

Table F-1. Neutron leakage from radial surface of lead shield and relative errors (cont)

Group upper energy (MeV)	Leakage	Rel. err.	Group upper energy (MeV)	Leakage	Rel. err.	Group upper energy (MeV)	Leakage	Rel. err.
1.2214E+01	2.0243E-06	0.0098	3.8396E-01	4.5335E-04	0.0006	3.2229E-04	2.0426E-04	0.0008
1.2095E+01	2.1501E-06	0.0095	3.8018E-01	4.1750E-04	0.0006	3.0664E-04	2.4383E-04	0.0008
1.1976E+01	2.3224E-06	0.0091	3.7639E-01	4.3173E-04	0.0006	2.9100E-04	2.8535E-04	0.0007
1.1856E+01	2.4942E-06	0.0088	3.7261E-01	3.8322E-04	0.0006	2.7536E-04	2.4608E-04	0.0008
1.1737E+01	2.7548E-06	0.0084	3.6883E-01	6.3593E-04	0.0005	2.6318E-04	2.6369E-04	0.0007
1.1618E+01	2.7782E-06	0.0083	3.6181E-01	5.2266E-04	0.0005	2.5100E-04	2.7990E-04	0.0007
1.1505E+01	3.0574E-06	0.0079	3.5479E-01	6.1042E-04	0.0005	2.3881E-04	2.9549E-04	0.0007
1.1392E+01	3.3611E-06	0.0076	3.4777E-01	1.1732E-03	0.0004	2.2663E-04	3.1211E-04	0.0007
1.1278E+01	3.5451E-06	0.0074	3.4075E-01	1.0445E-03	0.0004	2.1445E-04	2.5549E-04	0.0007
1.1165E+01	3.9415E-06	0.0070	3.3373E-01	9.1934E-04	0.0004	2.0496E-04	2.6659E-04	0.0007
1.1052E+01	4.2594E-06	0.0067	3.2738E-01	7.7474E-04	0.0004	1.9548E-04	2.7975E-04	0.0007
1.0944E+01	4.8571E-06	0.0063	3.2103E-01	7.0343E-04	0.0004	1.8599E-04	2.9303E-04	0.0007
1.0836E+01	5.2625E-06	0.0061	3.1467E-01	8.9064E-04	0.0004	1.7651E-04	3.0871E-04	0.0007
1.0729E+01	5.7006E-06	0.0058	3.0832E-01	9.0901E-04	0.0004	1.6702E-04	2.5222E-04	0.0008
1.0621E+01	5.9596E-06	0.0057	3.0197E-01	9.8864E-05	0.0011	1.5963E-04	2.6300E-04	0.0007
1.0513E+01	6.0384E-06	0.0056	3.0127E-01	9.8382E-05	0.0011	1.5224E-04	2.7569E-04	0.0007
1.0410E+01	6.3852E-06	0.0055	3.0058E-01	9.6332E-05	0.0011	1.4485E-04	2.8995E-04	0.0007
1.0308E+01	6.8034E-06	0.0053	2.9988E-01	9.5767E-05	0.0011	1.3746E-04	3.0474E-04	0.0007
1.0205E+01	7.3024E-06	0.0051	2.9919E-01	9.5440E-05	0.0011	1.3007E-04	2.4849E-04	0.0008
1.0103E+01	8.0863E-06	0.0049	2.9849E-01	3.1153E-05	0.0019	1.2432E-04	2.6039E-04	0.0007
1.0000E+01	8.3863E-06	0.0048	2.9823E-01	2.8576E-05	0.0020	1.1856E-04	2.7271E-04	0.0007
9.9025E+00	8.9366E-06	0.0046	2.9798E-01	2.8860E-05	0.0020	1.1281E-04	2.8697E-04	0.0007
9.8049E+00	9.5478E-06	0.0045	2.9772E-01	4.0205E-05	0.0017	1.0705E-04	3.0154E-04	0.0007
9.7074E+00	1.0392E-05	0.0043	2.9747E-01	3.8674E-05	0.0017	1.0130E-04	2.4672E-04	0.0008
9.6098E+00	1.1219E-05	0.0041	2.9721E-01	7.7868E-05	0.0012	9.6819E-05	2.5796E-04	0.0008
9.5123E+00	1.1527E-05	0.0041	2.9667E-01	7.6114E-05	0.0012	9.2337E-05	2.7014E-04	0.0007
9.4195E+00	1.2302E-05	0.0040	2.9613E-01	7.4440E-05	0.0012	8.7856E-05	2.8377E-04	0.0007
9.3267E+00	1.3482E-05	0.0038	2.9560E-01	7.5169E-05	0.0012	8.3374E-05	2.9873E-04	0.0007
9.2340E+00	1.4334E-05	0.0037	2.9506E-01	7.4719E-05	0.0012	7.8893E-05	2.4443E-04	0.0008
9.1412E+00	1.4819E-05	0.0036	2.9452E-01	1.8328E-04	0.0008	7.5403E-05	2.5576E-04	0.0008
9.0484E+00	1.5073E-05	0.0036	2.9307E-01	1.9576E-04	0.0008	7.1913E-05	2.6750E-04	0.0007
8.9601E+00	1.6426E-05	0.0034	2.9161E-01	1.9109E-04	0.0008	6.8422E-05	2.8113E-04	0.0007
8.8719E+00	1.6766E-05	0.0034	2.9016E-01	1.9102E-04	0.0008	6.4932E-05	2.9619E-04	0.0007
8.7836E+00	1.7168E-05	0.0033	2.8870E-01	1.8691E-04	0.0008	6.1442E-05	2.4235E-04	0.0008
8.6954E+00	1.8707E-05	0.0032	2.8725E-01	3.4370E-04	0.0006	5.8724E-05	2.5361E-04	0.0008
8.6071E+00	1.9633E-05	0.0031	2.8445E-01	3.2850E-04	0.0006	5.6006E-05	2.6506E-04	0.0007
8.5231E+00	2.0418E-05	0.0031	2.8165E-01	3.2105E-04	0.0006	5.3287E-05	2.7767E-04	0.0007
8.4392E+00	2.0992E-05	0.0030	2.7884E-01	2.7453E-04	0.0007	5.0569E-05	2.9221E-04	0.0007
8.3552E+00	2.1792E-05	0.0030	2.7604E-01	3.7064E-04	0.0006	4.7851E-05	2.3932E-04	0.0008
8.2713E+00	2.3391E-05	0.0029	2.7324E-01	6.4793E-04	0.0005	4.5734E-05	2.5007E-04	0.0008
8.1873E+00	2.4620E-05	0.0028	2.6804E-01	6.4625E-04	0.0005	4.3617E-05	2.6196E-04	0.0007
8.1074E+00	2.7942E-05	0.0026	2.6284E-01	6.0266E-04	0.0005	4.1500E-05	2.7498E-04	0.0007
8.0276E+00	2.9737E-05	0.0026	2.5764E-01	7.8586E-04	0.0004	3.9383E-05	2.8989E-04	0.0007
7.9477E+00	2.8685E-05	0.0026	2.5244E-01	6.6041E-04	0.0005	3.7266E-05	2.3712E-04	0.0008
7.8679E+00	2.9011E-05	0.0026	2.4724E-01	3.0571E-04	0.0006	3.5617E-05	2.4729E-04	0.0008
7.7880E+00	3.0052E-05	0.0025	2.4483E-01	3.1589E-04	0.0006	3.3969E-05	2.5895E-04	0.0007
7.7120E+00	3.2874E-05	0.0024	2.4242E-01	3.0233E-04	0.0006	3.2320E-05	2.7151E-04	0.0007
7.6361E+00	3.5549E-05	0.0023	2.4000E-01	3.0592E-04	0.0006	3.0672E-05	2.8581E-04	0.0007
7.5601E+00	3.7282E-05	0.0023	2.3759E-01	2.8797E-04	0.0007	2.9023E-05	2.3436E-04	0.0008
7.4842E+00	3.8590E-05	0.0022	2.3518E-01	2.7823E-04	0.0007	2.7739E-05	2.4529E-04	0.0008
7.4082E+00	3.7638E-05	0.0023	2.3289E-01	2.8449E-04	0.0007	2.6455E-05	2.5754E-04	0.0008

ALARM-TRAN-PB-SHIELD-001

Table F-1. Neutron leakage from radial surface of lead shield and relative errors (cont)

Group upper energy (MeV)	Leakage	Rel. err.	Group upper energy (MeV)	Leakage	Rel. err.	Group upper energy (MeV)	Leakage	Rel. err.
7.3359E+00	3.9370E-05	0.0022	2.3059E-01	2.5832E-04	0.0007	2.5171E-05	2.7039E-04	0.0007
7.2637E+00	3.9847E-05	0.0022	2.2830E-01	3.0356E-04	0.0006	2.3887E-05	2.8462E-04	0.0007
7.1914E+00	4.5046E-05	0.0021	2.2600E-01	2.8402E-04	0.0007	2.2603E-05	2.3287E-04	0.0008
7.1192E+00	4.9674E-05	0.0020	2.2371E-01	2.5267E-04	0.0007	2.1603E-05	2.4306E-04	0.0008
7.0469E+00	5.0354E-05	0.0020	2.2153E-01	3.1013E-04	0.0006	2.0603E-05	2.5429E-04	0.0008
6.9782E+00	5.4285E-05	0.0019	2.1935E-01	3.4577E-04	0.0006	1.9604E-05	2.6646E-04	0.0007
6.9094E+00	5.5990E-05	0.0019	2.1716E-01	3.0614E-04	0.0006	1.8604E-05	2.8037E-04	0.0007
6.8407E+00	5.3003E-05	0.0019	2.1498E-01	2.8102E-04	0.0007	1.7604E-05	2.2931E-04	0.0008
6.7719E+00	5.8880E-05	0.0018	2.1280E-01	2.4906E-04	0.0007	1.6825E-05	2.3934E-04	0.0008
6.7032E+00	1.9909E-05	0.0030	2.1072E-01	1.9660E-04	0.0008	1.6046E-05	2.5042E-04	0.0008
6.6810E+00	1.9978E-05	0.0030	2.0865E-01	3.1789E-04	0.0006	1.5268E-05	2.6407E-04	0.0007
6.6589E+00	2.0539E-05	0.0029	2.0657E-01	3.4193E-04	0.0006	1.4489E-05	2.7805E-04	0.0007
6.6367E+00	2.0824E-05	0.0029	2.0450E-01	2.7494E-04	0.0007	1.3710E-05	2.2775E-04	0.0008
6.6146E+00	2.1542E-05	0.0029	2.0242E-01	2.7690E-04	0.0007	1.3103E-05	2.3795E-04	0.0008
6.5924E+00	4.3748E-05	0.0021	2.0045E-01	2.6103E-04	0.0007	1.2497E-05	2.4931E-04	0.0008
6.5492E+00	4.6740E-05	0.0020	1.9847E-01	2.4412E-04	0.0007	1.1890E-05	2.6086E-04	0.0007
6.5060E+00	4.8830E-05	0.0019	1.9650E-01	2.5860E-04	0.0007	1.1284E-05	2.7503E-04	0.0007
6.4627E+00	4.7700E-05	0.0020	1.9452E-01	2.4958E-04	0.0007	1.0677E-05	2.2461E-04	0.0008
6.4195E+00	4.3544E-05	0.0021	1.9255E-01	2.2517E-04	0.0007	1.0205E-05	2.4632E-04	0.0008
6.3763E+00	6.9636E-05	0.0016	1.9067E-01	2.1037E-04	0.0008	9.7323E-06	2.4581E-04	0.0008
6.3141E+00	7.5664E-05	0.0016	1.8879E-01	2.0592E-04	0.0008	9.2600E-06	2.5786E-04	0.0007
6.2519E+00	7.8205E-05	0.0016	1.8692E-01	2.4211E-04	0.0007	8.7876E-06	2.7037E-04	0.0007
6.1897E+00	8.0892E-05	0.0015	1.8504E-01	2.6981E-04	0.0007	8.3153E-06	2.2086E-04	0.0008
6.1275E+00	8.1577E-05	0.0015	1.8316E-01	2.4836E-04	0.0007	7.9474E-06	2.3240E-04	0.0008
6.0653E+00	7.8784E-05	0.0015	1.8137E-01	2.3916E-04	0.0007	7.5796E-06	2.4364E-04	0.0008
6.0061E+00	8.3429E-05	0.0015	1.7958E-01	2.4624E-04	0.0007	7.2117E-06	2.5581E-04	0.0007
5.9470E+00	7.7621E-05	0.0015	1.7780E-01	2.5726E-04	0.0007	6.8439E-06	2.6967E-04	0.0007
5.8878E+00	8.8148E-05	0.0015	1.7601E-01	2.4912E-04	0.0007	6.4760E-06	2.1939E-04	0.0008
5.8287E+00	9.0157E-05	0.0014	1.7422E-01	2.1252E-04	0.0008	6.1895E-06	2.2926E-04	0.0008
5.7695E+00	8.6631E-05	0.0015	1.7252E-01	2.1322E-04	0.0008	5.9030E-06	2.3980E-04	0.0008
5.7132E+00	8.6083E-05	0.0015	1.7082E-01	2.1275E-04	0.0008	5.6165E-06	2.4972E-04	0.0008
5.6569E+00	8.6888E-05	0.0015	1.6913E-01	2.2571E-04	0.0007	5.3300E-06	2.4126E-04	0.0008
5.6007E+00	9.6065E-05	0.0014	1.6743E-01	2.5135E-04	0.0007	5.0435E-06	1.9808E-04	0.0008
5.5444E+00	1.0647E-04	0.0013	1.6573E-01	2.3441E-04	0.0007	4.8204E-06	2.1197E-04	0.0008
5.4881E+00	1.0738E-04	0.0013	1.6411E-01	2.2923E-04	0.0007	4.5973E-06	2.2705E-04	0.0008
5.4346E+00	1.1140E-04	0.0013	1.6249E-01	2.2879E-04	0.0007	4.3741E-06	2.4217E-04	0.0008
5.3811E+00	1.1038E-04	0.0013	1.6088E-01	2.1709E-04	0.0007	4.1510E-06	2.5857E-04	0.0007
5.3275E+00	1.1641E-04	0.0013	1.5926E-01	2.2406E-04	0.0007	3.9279E-06	2.1309E-04	0.0008
5.2740E+00	1.2070E-04	0.0012	1.5764E-01	2.1478E-04	0.0008	3.7541E-06	2.2394E-04	0.0008
5.2205E+00	1.1610E-04	0.0013	1.5610E-01	2.0499E-04	0.0008	3.5803E-06	2.3520E-04	0.0008
5.1696E+00	1.0375E-04	0.0013	1.5457E-01	2.0611E-04	0.0008	3.4066E-06	2.4762E-04	0.0008
5.1187E+00	1.1279E-04	0.0013	1.5303E-01	2.0595E-04	0.0008	3.2328E-06	2.6163E-04	0.0007
5.0677E+00	1.2817E-04	0.0012	1.5150E-01	1.4509E-04	0.0009	3.0590E-06	2.1427E-04	0.0008
5.0168E+00	1.3951E-04	0.0011	1.4996E-01	1.6077E-04	0.0009	2.9237E-06	2.2448E-04	0.0008
4.9659E+00	1.3413E-04	0.0012	1.4850E-01	1.9054E-04	0.0008	2.7884E-06	2.3563E-04	0.0008
4.9175E+00	1.3442E-04	0.0012	1.4703E-01	1.9797E-04	0.0008	2.6530E-06	2.4809E-04	0.0007
4.8690E+00	1.2602E-04	0.0012	1.4557E-01	1.9519E-04	0.0008	2.5177E-06	2.6156E-04	0.0007
4.8206E+00	1.4569E-04	0.0011	1.4410E-01	1.9369E-04	0.0008	2.3824E-06	2.1423E-04	0.0008
4.7721E+00	1.6178E-04	0.0011	1.4264E-01	1.7527E-04	0.0008	2.2770E-06	2.2413E-04	0.0008
4.7237E+00	1.5021E-04	0.0011	1.4125E-01	1.4658E-04	0.0009	2.1716E-06	2.3526E-04	0.0008
4.6776E+00	1.5172E-04	0.0011	1.3986E-01	1.6893E-04	0.0008	2.0662E-06	2.4728E-04	0.0007

ALARM-TRAN-PB-SHIELD-001

Table F-1. Neutron leakage from radial surface of lead shield and relative errors (cont)

Group upper energy (MeV)	Leakage	Rel. err.	Group upper energy (MeV)	Leakage	Rel. err.	Group upper energy (MeV)	Leakage	Rel. err.
4.6315E+00	1.4862E-04	0.0011	1.3847E-01	2.1339E-04	0.0008	1.9608E-06	2.6057E-04	0.0007
4.5855E+00	1.5439E-04	0.0011	1.3708E-01	2.1359E-04	0.0008	1.8554E-06	2.1305E-04	0.0008
4.5394E+00	1.5867E-04	0.0011	1.3569E-01	2.0150E-04	0.0008	1.7733E-06	2.2280E-04	0.0008
4.4933E+00	3.0144E-04	0.0008	1.3437E-01	2.0820E-04	0.0008	1.6912E-06	2.3374E-04	0.0008
4.4078E+00	2.9055E-04	0.0008	1.3304E-01	1.9803E-04	0.0008	1.6092E-06	2.4623E-04	0.0007
4.3223E+00	3.5849E-04	0.0007	1.3172E-01	1.9681E-04	0.0008	1.5271E-06	2.5906E-04	0.0007
4.2367E+00	3.7680E-04	0.0007	1.3039E-01	1.8308E-04	0.0008	1.4450E-06	9.5068E-05	0.0011
4.1512E+00	4.5236E-04	0.0007	1.2907E-01	1.7054E-04	0.0008	1.4160E-06	9.7109E-05	0.0011
4.0657E+00	4.1461E-04	0.0007	1.2781E-01	1.7056E-04	0.0008	1.3870E-06	9.8825E-05	0.0011
3.9883E+00	4.1718E-04	0.0007	1.2655E-01	2.0071E-04	0.0008	1.3580E-06	1.0118E-04	0.0011
3.9109E+00	4.3473E-04	0.0007	1.2529E-01	1.3948E-04	0.0009	1.3290E-06	1.0331E-04	0.0010
3.8336E+00	4.2306E-04	0.0007	1.2403E-01	1.9245E-04	0.0008	1.3000E-06	1.2751E-04	0.0010
3.7562E+00	4.4566E-04	0.0007	1.2277E-01	1.9582E-04	0.0008	1.2651E-06	1.3099E-04	0.0009
3.6788E+00	4.3406E-04	0.0007	1.2157E-01	1.9299E-04	0.0008	1.2301E-06	1.3429E-04	0.0009
3.6088E+00	4.5924E-04	0.0006	1.2038E-01	1.8988E-04	0.0008	1.1952E-06	1.3860E-04	0.0009
3.5388E+00	4.8601E-04	0.0006	1.1918E-01	1.7652E-04	0.0008	1.1602E-06	1.4206E-04	0.0009
3.4687E+00	5.2370E-04	0.0006	1.1799E-01	9.6945E-05	0.0011	1.1253E-06	3.7751E-05	0.0017
3.3987E+00	5.2472E-04	0.0006	1.1679E-01	1.5697E-04	0.0009	1.1162E-06	3.7616E-05	0.0017
3.3287E+00	2.4576E-04	0.0008	1.1565E-01	1.3643E-04	0.0009	1.1072E-06	3.8338E-05	0.0016
3.2962E+00	2.6592E-04	0.0008	1.1451E-01	1.7893E-04	0.0008	1.0981E-06	3.8251E-05	0.0016
3.2638E+00	2.8101E-04	0.0008	1.1337E-01	1.9123E-04	0.0008	1.0891E-06	3.8944E-05	0.0016
3.2313E+00	3.1405E-04	0.0007	1.1223E-01	1.7582E-04	0.0008	1.0800E-06	3.4410E-05	0.0017
3.1989E+00	3.4726E-04	0.0007	1.1109E-01	4.3679E-04	0.0006	1.0720E-06	3.4758E-05	0.0017
3.1664E+00	3.3766E-04	0.0007	1.0848E-01	4.3207E-04	0.0006	1.0640E-06	3.4979E-05	0.0017
3.1355E+00	3.4592E-04	0.0007	1.0587E-01	4.0639E-04	0.0006	1.0560E-06	3.5256E-05	0.0017
3.1046E+00	3.7526E-04	0.0007	1.0326E-01	4.1473E-04	0.0006	1.0480E-06	3.5490E-05	0.0017
3.0737E+00	3.7326E-04	0.0007	1.0065E-01	3.9339E-04	0.0006	1.0400E-06	3.5796E-05	0.0017
3.0428E+00	3.6914E-04	0.0007	9.8037E-02	3.5119E-04	0.0006	1.0320E-06	3.6130E-05	0.0017
3.0119E+00	3.6879E-04	0.0007	9.5733E-02	3.4682E-04	0.0006	1.0240E-06	3.6331E-05	0.0017
2.9825E+00	3.6168E-04	0.0007	9.3429E-02	3.5882E-04	0.0006	1.0160E-06	3.6548E-05	0.0017
2.9532E+00	3.7874E-04	0.0007	9.1125E-02	3.1513E-04	0.0006	1.0080E-06	3.6997E-05	0.0017
2.9238E+00	3.9375E-04	0.0006	8.8821E-02	3.3965E-04	0.0006	1.0000E-06	1.1557E-04	0.0010
2.8945E+00	4.2971E-04	0.0006	8.6517E-02	1.1536E-04	0.0010	9.7529E-07	1.1872E-04	0.0010
2.8651E+00	3.9140E-04	0.0006	8.5714E-02	1.2483E-04	0.0010	9.5057E-07	1.2169E-04	0.0010
2.8371E+00	4.3520E-04	0.0006	8.4911E-02	1.2063E-04	0.0010	9.2586E-07	1.2509E-04	0.0010
2.8092E+00	4.1734E-04	0.0006	8.4109E-02	1.1581E-04	0.0010	9.0114E-07	1.2851E-04	0.0009
2.7812E+00	3.7250E-04	0.0006	8.3306E-02	1.1577E-04	0.0010	8.7643E-07	8.1276E-05	0.0012
2.7533E+00	4.7566E-04	0.0006	8.2503E-02	1.0108E-04	0.0011	8.6114E-07	8.2628E-05	0.0011
2.7253E+00	4.5867E-04	0.0006	8.1902E-02	1.0327E-04	0.0011	8.4586E-07	8.4168E-05	0.0011
2.6987E+00	4.5580E-04	0.0006	8.1301E-02	9.4020E-05	0.0011	8.3057E-07	8.5965E-05	0.0011
2.6721E+00	4.5284E-04	0.0006	8.0701E-02	8.4427E-05	0.0012	8.1529E-07	8.7623E-05	0.0011
2.6456E+00	4.5582E-04	0.0006	8.0100E-02	7.1051E-05	0.0013	8.0000E-07	1.3781E-04	0.0009
2.6190E+00	5.1457E-04	0.0006	7.9499E-02	7.4858E-05	0.0012	7.7651E-07	1.4212E-04	0.0009
2.5924E+00	5.6115E-04	0.0006	7.7999E-02	1.4050E-04	0.0009	7.5302E-07	1.4652E-04	0.0009
2.5671E+00	4.9276E-04	0.0006	7.6499E-02	2.5914E-04	0.0007	7.2954E-07	1.5156E-04	0.0009
2.5418E+00	5.1023E-04	0.0006	7.4998E-02	2.8180E-04	0.0007	7.0605E-07	1.5670E-04	0.0009
2.5166E+00	4.7327E-04	0.0006	7.3498E-02	3.0689E-04	0.0007	6.8256E-07	7.8623E-05	0.0012
2.4913E+00	5.6414E-04	0.0005	7.1998E-02	1.5004E-04	0.0009	6.7106E-07	8.0173E-05	0.0011
2.4660E+00	4.0062E-04	0.0006	7.1074E-02	1.7003E-04	0.0008	6.5956E-07	8.1386E-05	0.0011
2.4498E+00	3.0657E-04	0.0007	7.0150E-02	2.0098E-04	0.0008	6.4806E-07	8.2984E-05	0.0011
2.4337E+00	3.6068E-04	0.0007	6.9227E-02	1.9634E-04	0.0008	6.3656E-07	8.4357E-05	0.0011

ALARM-TRAN-PB-SHIELD-001

Table F-1. Neutron leakage from radial surface of lead shield and relative errors (cont)

Group upper energy (MeV)	Leakage	Rel. err.	Group upper energy (MeV)	Leakage	Rel. err.	Group upper energy (MeV)	Leakage	Rel. err.
2.4175E+00	3.3251E-04	0.0007	6.8303E-02	1.9577E-04	0.0008	6.2506E-07	1.4076E-04	0.0009
2.4014E+00	3.6250E-04	0.0006	6.7379E-02	4.4913E-04	0.0006	6.0636E-07	1.4509E-04	0.0009
2.3852E+00	8.7526E-05	0.0012	6.5216E-02	4.6578E-04	0.0006	5.8767E-07	1.4993E-04	0.0009
2.3812E+00	9.0089E-05	0.0012	6.3052E-02	4.4863E-04	0.0006	5.6897E-07	1.5475E-04	0.0009
2.3772E+00	1.1039E-04	0.0011	6.0889E-02	4.4842E-04	0.0006	5.5028E-07	1.5995E-04	0.0008
2.3733E+00	1.2106E-04	0.0011	5.8725E-02	4.4847E-04	0.0006	5.3158E-07	5.5362E-05	0.0014
2.3693E+00	1.1673E-04	0.0011	5.6562E-02	1.6913E-04	0.0009	5.2526E-07	5.6068E-05	0.0013
2.3653E+00	1.0564E-04	0.0011	5.5745E-02	1.6796E-04	0.0009	5.1895E-07	5.6654E-05	0.0013
2.3614E+00	8.3219E-05	0.0012	5.4927E-02	1.6733E-04	0.0009	5.1263E-07	5.7356E-05	0.0013
2.3575E+00	8.6926E-05	0.0012	5.4110E-02	1.6194E-04	0.0009	5.0632E-07	5.8217E-05	0.0013
2.3535E+00	1.0077E-04	0.0011	5.3292E-02	1.6417E-04	0.0009	5.0000E-07	1.6204E-04	0.0008
2.3496E+00	1.0070E-04	0.0011	5.2475E-02	2.4627E-04	0.0007	4.8280E-07	1.6793E-04	0.0008
2.3457E+00	1.7705E-04	0.0009	5.1242E-02	2.4249E-04	0.0007	4.6560E-07	1.7394E-04	0.0008
2.3379E+00	1.8225E-04	0.0009	5.0009E-02	2.4253E-04	0.0007	4.4839E-07	1.8008E-04	0.0008
2.3302E+00	2.0624E-04	0.0008	4.8775E-02	2.4126E-04	0.0007	4.3119E-07	1.8696E-04	0.0008
2.3224E+00	1.7631E-04	0.0009	4.7542E-02	2.3395E-04	0.0007	4.1399E-07	1.0573E-04	0.0010
2.3147E+00	1.8567E-04	0.0008	4.6309E-02	2.2428E-04	0.0008	4.0455E-07	1.0801E-04	0.0010
2.3069E+00	3.6697E-04	0.0006	4.5221E-02	2.2114E-04	0.0008	3.9511E-07	1.1070E-04	0.0010
2.2918E+00	3.8601E-04	0.0006	4.4133E-02	2.0481E-04	0.0008	3.8568E-07	1.1267E-04	0.0010
2.2767E+00	3.9280E-04	0.0006	4.3044E-02	1.6424E-04	0.0009	3.7624E-07	1.1550E-04	0.0010
2.2615E+00	4.4200E-04	0.0006	4.1956E-02	1.4171E-04	0.0009	3.6680E-07	1.0467E-04	0.0010
2.2464E+00	4.0244E-04	0.0006	4.0868E-02	4.4014E-04	0.0006	3.5844E-07	1.0673E-04	0.0010
2.2313E+00	5.9966E-04	0.0005	3.9556E-02	4.5757E-04	0.0006	3.5008E-07	1.0917E-04	0.0010
2.2095E+00	5.6454E-04	0.0005	3.8244E-02	3.8481E-04	0.0006	3.4172E-07	1.1157E-04	0.0010
2.1878E+00	5.8656E-04	0.0005	3.6931E-02	3.5898E-04	0.0006	3.3336E-07	1.1426E-04	0.0010
2.1660E+00	5.6637E-04	0.0005	3.5619E-02	3.7142E-04	0.0006	3.2500E-07	1.4025E-04	0.0009
2.1443E+00	6.0638E-04	0.0005	3.4307E-02	1.3642E-04	0.0009	3.1500E-07	1.4448E-04	0.0009
2.1225E+00	5.2951E-04	0.0005	3.3811E-02	1.3598E-04	0.0010	3.0500E-07	1.4901E-04	0.0008
2.1018E+00	6.1839E-04	0.0005	3.3315E-02	1.3218E-04	0.0010	2.9500E-07	1.5410E-04	0.0008
2.0811E+00	5.0890E-04	0.0005	3.2820E-02	1.3603E-04	0.0010	2.8500E-07	1.5958E-04	0.0008
2.0604E+00	5.3815E-04	0.0005	3.2324E-02	1.3407E-04	0.0010	2.7500E-07	1.6569E-04	0.0008
2.0397E+00	6.1734E-04	0.0005	3.1828E-02	1.7691E-04	0.0009	2.6500E-07	1.7260E-04	0.0008
2.0190E+00	6.0296E-04	0.0005	3.1163E-02	1.7434E-04	0.0009	2.5500E-07	1.8020E-04	0.0008
1.9993E+00	6.5048E-04	0.0005	3.0497E-02	1.6963E-04	0.0009	2.4500E-07	1.8925E-04	0.0007
1.9796E+00	6.0315E-04	0.0005	2.9832E-02	1.5261E-04	0.0009	2.3500E-07	1.9938E-04	0.0007
1.9599E+00	6.0387E-04	0.0005	2.9166E-02	1.5402E-04	0.0009	2.2500E-07	1.7242E-04	0.0008
1.9402E+00	5.7472E-04	0.0005	2.8501E-02	6.4983E-05	0.0013	2.1680E-07	1.8164E-04	0.0008
1.9205E+00	5.1172E-04	0.0005	2.8201E-02	6.2025E-05	0.0014	2.0860E-07	1.9251E-04	0.0007
1.9018E+00	6.5801E-04	0.0005	2.7901E-02	5.9181E-05	0.0014	2.0040E-07	2.0460E-04	0.0007
1.8830E+00	6.5335E-04	0.0005	2.7600E-02	5.8449E-05	0.0014	1.9220E-07	2.1891E-04	0.0007
1.8643E+00	6.6891E-04	0.0005	2.7300E-02	6.0119E-05	0.0014	1.8400E-07	1.9439E-04	0.0007
1.8455E+00	6.2038E-04	0.0005	2.7000E-02	3.9318E-05	0.0017	1.7720E-07	2.0748E-04	0.0007
1.8268E+00	5.7313E-04	0.0005	2.6812E-02	4.1578E-05	0.0017	1.7040E-07	2.2286E-04	0.0007
1.8090E+00	6.4347E-04	0.0005	2.6623E-02	4.3910E-05	0.0016	1.6360E-07	2.4012E-04	0.0006
1.7912E+00	6.9878E-04	0.0005	2.6435E-02	4.7544E-05	0.0016	1.5680E-07	2.6059E-04	0.0006
1.7733E+00	6.1447E-04	0.0005	2.6246E-02	5.1344E-05	0.0015	1.5000E-07	2.0607E-04	0.0007
1.7555E+00	4.8881E-04	0.0005	2.6058E-02	7.6521E-05	0.0013	1.4500E-07	2.2030E-04	0.0006
1.7377E+00	5.7396E-04	0.0005	2.5804E-02	8.3851E-05	0.0012	1.4000E-07	2.3613E-04	0.0006
1.7208E+00	6.7198E-04	0.0005	2.5550E-02	5.9581E-05	0.0014	1.3500E-07	2.5352E-04	0.0006
1.7038E+00	5.9634E-04	0.0005	2.5296E-02	9.8425E-05	0.0011	1.3000E-07	2.7284E-04	0.0006
1.6869E+00	6.9071E-04	0.0005	2.5042E-02	1.1054E-04	0.0011	1.2500E-07	2.9442E-04	0.0006

ALARM-TRAN-PB-SHIELD-001

Table F-1. Neutron leakage from radial surface of lead shield and relative errors (cont)

Group upper energy (MeV)	Leakage	Rel. err.	Group upper energy (MeV)	Leakage	Rel. err.	Group upper energy (MeV)	Leakage	Rel. err.
1.6699E+00	6.1583E-04	0.0005	2.4788E-02	5.3166E-05	0.0015	1.2000E-07	3.1784E-04	0.0005
1.6530E+00	7.8358E-04	0.0004	2.4666E-02	5.3603E-05	0.0015	1.1500E-07	3.4400E-04	0.0005
1.6369E+00	7.7492E-04	0.0005	2.4543E-02	5.3156E-05	0.0015	1.1000E-07	3.7307E-04	0.0005
1.6208E+00	6.8636E-04	0.0005	2.4421E-02	5.3046E-05	0.0015	1.0500E-07	4.0404E-04	0.0005
1.6046E+00	6.9779E-04	0.0005	2.4298E-02	4.9719E-05	0.0016	1.0000E-07	5.3053E-04	0.0004
1.5885E+00	8.5215E-04	0.0004	2.4176E-02	4.9960E-05	0.0015	9.4000E-08	5.8494E-04	0.0004
1.5724E+00	6.5946E-04	0.0005	2.4057E-02	5.4231E-05	0.0015	8.8000E-08	6.4357E-04	0.0004
1.5571E+00	6.9243E-04	0.0005	2.3937E-02	5.3494E-05	0.0015	8.2000E-08	7.0674E-04	0.0004
1.5417E+00	7.2285E-04	0.0005	2.3818E-02	5.3503E-05	0.0015	7.6000E-08	7.7206E-04	0.0003
1.5264E+00	7.0528E-04	0.0005	2.3698E-02	5.2865E-05	0.0015	7.0000E-08	5.5212E-04	0.0004
1.5110E+00	7.5594E-04	0.0005	2.3579E-02	1.5205E-04	0.0009	6.6000E-08	5.8180E-04	0.0004
1.4957E+00	6.8372E-04	0.0005	2.3238E-02	1.5131E-04	0.0009	6.2000E-08	6.1035E-04	0.0004
1.4811E+00	5.8571E-04	0.0005	2.2897E-02	1.4983E-04	0.0009	5.8000E-08	6.3695E-04	0.0004
1.4665E+00	7.3649E-04	0.0005	2.2557E-02	1.4526E-04	0.0009	5.4000E-08	6.6041E-04	0.0004
1.4519E+00	7.3316E-04	0.0005	2.2216E-02	1.4919E-04	0.0009	5.0000E-08	3.3797E-04	0.0005
1.4373E+00	7.5234E-04	0.0005	2.1875E-02	2.2498E-04	0.0008	4.8000E-08	3.4183E-04	0.0005
1.4227E+00	7.0823E-04	0.0005	2.1361E-02	2.2298E-04	0.0008	4.6000E-08	3.4561E-04	0.0005
1.4088E+00	7.4257E-04	0.0005	2.0847E-02	2.2289E-04	0.0008	4.4000E-08	3.4801E-04	0.0005
1.3950E+00	6.4532E-04	0.0005	2.0333E-02	2.2348E-04	0.0008	4.2000E-08	3.4935E-04	0.0005
1.3811E+00	7.5073E-04	0.0005	1.9819E-02	2.2048E-04	0.0008	4.0000E-08	3.4962E-04	0.0005
1.3673E+00	8.5635E-04	0.0004	1.9305E-02	3.7538E-04	0.0006	3.8000E-08	3.4841E-04	0.0005
1.3534E+00	7.1466E-04	0.0005	1.8451E-02	3.7908E-04	0.0006	3.6000E-08	3.4669E-04	0.0005
1.3402E+00	7.2306E-04	0.0005	1.7597E-02	3.5567E-04	0.0007	3.4000E-08	3.4310E-04	0.0005
1.3270E+00	7.2186E-04	0.0005	1.6742E-02	3.6800E-04	0.0006	3.2000E-08	3.3708E-04	0.0005
1.3138E+00	6.7224E-04	0.0005	1.5888E-02	3.7755E-04	0.0006	3.0000E-08	2.9738E-04	0.0005
1.3006E+00	6.5975E-04	0.0005	1.5034E-02	3.0039E-04	0.0007	2.8200E-08	2.8962E-04	0.0005
1.2874E+00	5.6829E-04	0.0005	1.4369E-02	3.2409E-04	0.0007	2.6400E-08	2.8065E-04	0.0005
1.2748E+00	7.2477E-04	0.0005	1.3704E-02	3.4623E-04	0.0007	2.4600E-08	2.7064E-04	0.0005
1.2623E+00	7.0656E-04	0.0005	1.3039E-02	3.5683E-04	0.0007	2.2800E-08	2.5835E-04	0.0005
1.2497E+00	7.1482E-04	0.0005	1.2374E-02	3.7948E-04	0.0006	2.1000E-08	1.7823E-04	0.0006
1.2372E+00	6.0902E-04	0.0005	1.1709E-02	1.3383E-04	0.0010	1.9700E-08	1.7050E-04	0.0006
1.2246E+00	9.1852E-04	0.0004	1.1486E-02	1.3645E-04	0.0010	1.8400E-08	1.6190E-04	0.0007
1.2126E+00	8.8661E-04	0.0004	1.1263E-02	1.3881E-04	0.0010	1.7100E-08	1.5257E-04	0.0007
1.2007E+00	7.8313E-04	0.0004	1.1041E-02	1.4259E-04	0.0009	1.5800E-08	1.4302E-04	0.0007
1.1887E+00	7.6428E-04	0.0004	1.0818E-02	1.4618E-04	0.0009	1.4500E-08	9.3080E-05	0.0008
1.1768E+00	8.1777E-04	0.0004	1.0595E-02	1.9749E-04	0.0008	1.3600E-08	8.7693E-05	0.0009
1.1648E+00	7.0774E-04	0.0005	1.0300E-02	1.9920E-04	0.0008	1.2700E-08	8.2282E-05	0.0009
1.1534E+00	6.8877E-04	0.0005	1.0005E-02	2.0674E-04	0.0008	1.1800E-08	7.6758E-05	0.0009
1.1421E+00	7.5978E-04	0.0004	9.7093E-03	2.0690E-04	0.0008	1.0900E-08	7.0856E-05	0.0010
1.1307E+00	6.9679E-04	0.0005	9.4140E-03	2.1159E-04	0.0008	1.0000E-08	7.1618E-05	0.0010
1.1194E+00	7.6223E-04	0.0004	9.1188E-03	2.8636E-04	0.0007	9.0000E-09	6.3869E-05	0.0010
1.1080E+00	1.5536E-03	0.0003	8.7154E-03	2.6009E-04	0.0007	8.0000E-09	5.6054E-05	0.0011
1.0869E+00	1.5527E-03	0.0003	8.3120E-03	2.8349E-04	0.0007	7.0000E-09	4.8122E-05	0.0012
1.0658E+00	1.2854E-03	0.0004	7.9085E-03	2.7702E-04	0.0007	6.0000E-09	4.0067E-05	0.0013
1.0448E+00	1.3038E-03	0.0004	7.5051E-03	2.9185E-04	0.0007	5.0000E-09	2.0318E-05	0.0017
1.0237E+00	1.4113E-03	0.0004	7.1017E-03	2.5238E-04	0.0008	4.4000E-09	1.7462E-05	0.0019
1.0026E+00	5.1541E-04	0.0005	6.7875E-03	2.7720E-04	0.0007	3.8000E-09	1.4557E-05	0.0020
9.9441E-01	4.2361E-04	0.0006	6.4733E-03	3.0051E-04	0.0007	3.2000E-09	1.1735E-05	0.0023
9.8622E-01	5.3939E-04	0.0005	6.1592E-03	3.2084E-04	0.0007	2.6000E-09	8.9662E-06	0.0026
9.7802E-01	5.2485E-04	0.0005	5.8450E-03	3.4170E-04	0.0007	2.0000E-09	3.4621E-06	0.0041
9.6983E-01	5.6648E-04	0.0005	5.5308E-03	2.8020E-04	0.0007	1.7000E-09	2.8396E-06	0.0045

ALARM-TRAN-PB-SHIELD-001

Table F-1. Neutron leakage from radial surface of lead shield and relative errors (cont)

Group upper energy (MeV)	Leakage	Rel. err.	Group upper energy (MeV)	Leakage	Rel. err.	Group upper energy (MeV)	Leakage	Rel. err.
9.6164E-01	7.2911E-04	0.0005	5.2861E-03	2.9817E-04	0.0007	1.4000E-09	2.1691E-06	0.0051
9.5075E-01	7.1550E-04	0.0005	5.0414E-03	3.1650E-04	0.0007	1.1000E-09	1.5861E-06	0.0059
9.3986E-01	9.3712E-04	0.0004	4.7968E-03	3.3034E-04	0.0007	8.0000E-10	1.0061E-06	0.0074
9.2896E-01	8.5313E-04	0.0004	4.5521E-03	3.4350E-04	0.0007	5.0000E-10	1.7915E-07	0.0173
9.1807E-01	8.6993E-04	0.0004	4.3074E-03	1.7217E-04	0.0009	4.2000E-10	1.3402E-07	0.0199
9.0718E-01	7.1565E-04	0.0005	4.1874E-03	1.7551E-04	0.0009	3.4000E-10	1.0927E-07	0.0221
8.9833E-01	7.2437E-04	0.0005	4.0674E-03	1.7813E-04	0.0009	2.6000E-10	7.0289E-08	0.0272
8.8948E-01	6.5792E-04	0.0005	3.9474E-03	1.8283E-04	0.0009	1.8000E-10	4.3635E-08	0.0343
8.8064E-01	7.0397E-04	0.0005	3.8274E-03	1.9165E-04	0.0008	1.0000E-10	1.5605E-08	0.0569
8.7179E-01	6.9114E-04	0.0005	3.7074E-03	1.1745E-04	0.0010	0.0000E+00 (minimum energy)		
8.6294E-01	5.8711E-04	0.0005	3.6368E-03	1.2100E-04	0.0010			
8.5452E-01	5.6789E-04	0.0005	3.5663E-03	1.2466E-04	0.0010			
8.4610E-01	7.3194E-04	0.0004	3.4957E-03	1.2820E-04	0.0010			

Table F-2. Photon leakage from radial surface of lead shield and relative errors (cont)

Group upper energy (MeV)	Leakage	Rel. err.	Group upper energy (MeV)	Leakage	Rel. err.	Group upper energy (MeV)	Leakage	Rel. err.
3.0000E+01	0.0000E+00	0.0000	2.2918E+00	1.9741E-05	0.0038	1.7958E-01	3.4243E-06	0.0083
2.8000E+01	0.0000E+00	0.0000	2.2767E+00	2.2115E-05	0.0035	1.7780E-01	3.4182E-06	0.0082
2.6000E+01	0.0000E+00	0.0000	2.2615E+00	2.0183E-05	0.0038	1.7601E-01	3.3529E-06	0.0083
2.4000E+01	0.0000E+00	0.0000	2.2464E+00	2.1054E-05	0.0037	1.7422E-01	3.2201E-06	0.0087
2.2000E+01	0.0000E+00	0.0000	2.2313E+00	1.3632E-04	0.0011	1.7252E-01	3.2189E-06	0.0087
2.0000E+01	0.0000E+00	0.0000	2.2095E+00	3.5227E-05	0.0027	1.7082E-01	3.0822E-06	0.0086
1.9928E+01	0.0000E+00	0.0000	2.1878E+00	3.7470E-05	0.0026	1.6913E-01	3.1198E-06	0.0089
1.9856E+01	0.0000E+00	0.0000	2.1660E+00	3.5817E-05	0.0027	1.6743E-01	3.0658E-06	0.0089
1.9784E+01	0.0000E+00	0.0000	2.1443E+00	3.7322E-05	0.0027	1.6573E-01	2.8617E-06	0.0092
1.9712E+01	0.0000E+00	0.0000	2.1225E+00	3.8220E-05	0.0026	1.6411E-01	2.8757E-06	0.0090
1.9640E+01	0.0000E+00	0.0000	2.1018E+00	5.8442E-05	0.0019	1.6249E-01	2.8453E-06	0.0091
1.9178E+01	0.0000E+00	0.0000	2.0811E+00	3.7012E-05	0.0027	1.6088E-01	2.8572E-06	0.0091
1.8717E+01	0.0000E+00	0.0000	2.0604E+00	3.6952E-05	0.0027	1.5926E-01	2.7944E-06	0.0091
1.8255E+01	0.0000E+00	0.0000	2.0397E+00	3.7459E-05	0.0027	1.5764E-01	2.6736E-06	0.0095
1.7794E+01	0.0000E+00	0.0000	2.0190E+00	3.6341E-05	0.0027	1.5610E-01	2.5994E-06	0.0096
1.7332E+01	0.0000E+00	0.0000	1.9993E+00	3.6590E-05	0.0027	1.5457E-01	2.5265E-06	0.0094
1.7247E+01	0.0000E+00	0.0000	1.9796E+00	3.7788E-05	0.0027	1.5303E-01	2.5175E-06	0.0094
1.7161E+01	0.0000E+00	0.0000	1.9599E+00	3.9689E-05	0.0026	1.5150E-01	2.5541E-06	0.0097
1.7076E+01	0.0000E+00	0.0000	1.9402E+00	3.9318E-05	0.0026	1.4996E-01	2.3544E-06	0.0099
1.6990E+01	0.0000E+00	0.0000	1.9205E+00	3.7106E-05	0.0027	1.4850E-01	2.4166E-06	0.0099
1.6905E+01	0.0000E+00	0.0000	1.9018E+00	3.8109E-05	0.0027	1.4703E-01	2.3058E-06	0.0098
1.6821E+01	0.0000E+00	0.0000	1.8830E+00	4.1271E-05	0.0025	1.4557E-01	2.3486E-06	0.0101
1.6738E+01	0.0000E+00	0.0000	1.8643E+00	3.9190E-05	0.0026	1.4410E-01	2.3051E-06	0.0098
1.6654E+01	0.0000E+00	0.0000	1.8455E+00	5.4444E-05	0.0021	1.4264E-01	2.1029E-06	0.0103
1.6571E+01	0.0000E+00	0.0000	1.8268E+00	4.2549E-05	0.0025	1.4125E-01	2.1069E-06	0.0104
1.6487E+01	0.0000E+00	0.0000	1.8090E+00	4.0233E-05	0.0026	1.3986E-01	2.0889E-06	0.0105
1.6326E+01	0.0000E+00	0.0000	1.7912E+00	4.1862E-05	0.0025	1.3847E-01	2.0404E-06	0.0103
1.6165E+01	1.5976E-10	1.0000	1.7733E+00	7.9117E-05	0.0016	1.3708E-01	2.2418E-06	0.0097
1.6005E+01	0.0000E+00	0.0000	1.7555E+00	4.4524E-05	0.0024	1.3569E-01	1.9407E-06	0.0110
1.5844E+01	0.0000E+00	0.0000	1.7377E+00	6.3579E-05	0.0018	1.3437E-01	1.8998E-06	0.0105

Table F-2. Photon leakage from radial surface of lead shield and relative errors (cont)

Group upper energy (MeV)	Leakage	Rel. err.	Group upper energy (MeV)	Leakage	Rel. err.	Group upper energy (MeV)	Leakage	Rel. err.
1.5683E+01	0.0000E+00	0.0000	1.7208E+00	4.0499E-05	0.0026	1.3304E-01	1.8768E-06	0.0108
1.5530E+01	0.0000E+00	0.0000	1.7038E+00	7.8469E-05	0.0016	1.3172E-01	1.8331E-06	0.0108
1.5377E+01	0.0000E+00	0.0000	1.6869E+00	4.2842E-05	0.0025	1.3039E-01	1.8324E-06	0.0111
1.5224E+01	1.0940E-10	1.0000	1.6699E+00	4.3062E-05	0.0025	1.2907E-01	1.7138E-06	0.0112
1.5071E+01	0.0000E+00	0.0000	1.6530E+00	4.7847E-05	0.0023	1.2781E-01	1.6589E-06	0.0113
1.4918E+01	0.0000E+00	0.0000	1.6369E+00	4.1352E-05	0.0026	1.2655E-01	2.2021E-06	0.0093
1.4844E+01	0.0000E+00	0.0000	1.6208E+00	6.0483E-05	0.0019	1.2529E-01	1.6950E-06	0.0114
1.4771E+01	0.0000E+00	0.0000	1.6046E+00	4.6315E-05	0.0024	1.2403E-01	2.1227E-06	0.0095
1.4697E+01	1.0928E-10	1.0000	1.5885E+00	5.5114E-05	0.0021	1.2277E-01	2.1185E-06	0.0096
1.4624E+01	1.2215E-10	1.0000	1.5724E+00	4.2364E-05	0.0025	1.2157E-01	1.5093E-06	0.0122
1.4550E+01	0.0000E+00	0.0000	1.5571E+00	5.0728E-05	0.0022	1.2038E-01	1.4952E-06	0.0118
1.4478E+01	1.1792E-10	1.0000	1.5417E+00	4.7150E-05	0.0023	1.1918E-01	1.4391E-06	0.0121
1.4406E+01	1.0942E-10	1.0000	1.5264E+00	4.2718E-05	0.0025	1.1799E-01	1.4687E-06	0.0120
1.4335E+01	0.0000E+00	0.0000	1.5110E+00	4.3105E-05	0.0025	1.1679E-01	1.3151E-06	0.0127
1.4263E+01	0.0000E+00	0.0000	1.4957E+00	4.1019E-05	0.0026	1.1565E-01	1.2832E-06	0.0128
1.4191E+01	1.0808E-10	1.0000	1.4811E+00	6.0683E-05	0.0019	1.1451E-01	1.2645E-06	0.0131
1.4121E+01	0.0000E+00	0.0000	1.4665E+00	4.2797E-05	0.0025	1.1337E-01	1.2040E-06	0.0131
1.4051E+01	0.0000E+00	0.0000	1.4519E+00	4.2575E-05	0.0025	1.1223E-01	1.1718E-06	0.0130
1.3980E+01	0.0000E+00	0.0000	1.4373E+00	6.4137E-05	0.0019	1.1109E-01	2.6585E-06	0.0087
1.3910E+01	1.0845E-10	1.0000	1.4227E+00	4.0471E-05	0.0026	1.0848E-01	2.4768E-06	0.0091
1.3840E+01	0.0000E+00	0.0000	1.4088E+00	4.4376E-05	0.0024	1.0587E-01	2.3002E-06	0.0094
1.3772E+01	0.0000E+00	0.0000	1.3950E+00	5.2015E-05	0.0022	1.0326E-01	2.1500E-06	0.0099
1.3704E+01	0.0000E+00	0.0000	1.3811E+00	4.1211E-05	0.0026	1.0065E-01	2.0232E-06	0.0100
1.3635E+01	1.2745E-10	1.0000	1.3673E+00	4.2310E-05	0.0025	9.8037E-02	1.6456E-06	0.0112
1.3567E+01	2.1776E-10	0.7071	1.3534E+00	6.2084E-05	0.0019	9.5733E-02	1.5512E-06	0.0116
1.3499E+01	4.6095E-10	0.5017	1.3402E+00	4.0310E-05	0.0026	9.3429E-02	1.4227E-06	0.0119
1.3367E+01	1.0941E-10	1.0000	1.3270E+00	4.0286E-05	0.0026	9.1125E-02	1.2932E-06	0.0122
1.3235E+01	1.0926E-10	1.0000	1.3138E+00	4.0677E-05	0.0026	8.8821E-02	8.6055E-06	0.0046
1.3104E+01	1.0933E-10	1.0000	1.3006E+00	4.0364E-05	0.0026	8.6517E-02	7.6446E-07	0.0166
1.2972E+01	1.0895E-10	1.0000	1.2874E+00	4.1640E-05	0.0025	8.5714E-02	2.6725E-05	0.0026
1.2840E+01	0.0000E+00	0.0000	1.2748E+00	3.8616E-05	0.0027	8.4911E-02	7.7689E-07	0.0164
1.2777E+01	0.0000E+00	0.0000	1.2623E+00	4.1479E-05	0.0025	8.4109E-02	7.6197E-07	0.0162
1.2713E+01	0.0000E+00	0.0000	1.2497E+00	4.5189E-05	0.0024	8.3306E-02	7.4063E-07	0.0164
1.2650E+01	0.0000E+00	0.0000	1.2372E+00	3.9189E-05	0.0026	8.2503E-02	5.3984E-07	0.0192
1.2586E+01	1.3851E-10	1.0000	1.2246E+00	4.1287E-05	0.0025	8.1902E-02	5.3914E-07	0.0196
1.2523E+01	0.0000E+00	0.0000	1.2126E+00	3.7555E-05	0.0027	8.1301E-02	5.1199E-07	0.0201
1.2461E+01	0.0000E+00	0.0000	1.2007E+00	3.9982E-05	0.0026	8.0701E-02	5.3684E-07	0.0199
1.2399E+01	3.4283E-10	0.5778	1.1887E+00	3.8504E-05	0.0026	8.0100E-02	4.9887E-07	0.0203
1.2338E+01	0.0000E+00	0.0000	1.1768E+00	3.7811E-05	0.0027	7.9499E-02	1.2438E-06	0.0129
1.2276E+01	2.1934E-10	0.7071	1.1648E+00	3.6994E-05	0.0027	7.7999E-02	1.1692E-06	0.0133
1.2214E+01	4.9994E-10	0.5038	1.1534E+00	3.5419E-05	0.0028	7.6499E-02	6.2268E-05	0.0018
1.2095E+01	1.0977E-10	1.0000	1.1421E+00	3.6617E-05	0.0027	7.4998E-02	1.2153E-06	0.0129
1.1976E+01	2.6193E-10	0.7091	1.1307E+00	3.8476E-05	0.0026	7.3498E-02	3.5912E-05	0.0023
1.1856E+01	5.7474E-10	0.5014	1.1194E+00	3.5511E-05	0.0028	7.1998E-02	7.7190E-07	0.0163
1.1737E+01	4.4649E-10	0.5774	1.1080E+00	8.8401E-05	0.0016	7.1074E-02	7.0305E-07	0.0170
1.1618E+01	7.6438E-10	0.7048	1.0869E+00	6.9483E-05	0.0019	7.0150E-02	6.8787E-07	0.0169
1.1505E+01	9.5041E-10	0.3809	1.0658E+00	1.0817E-04	0.0014	6.9227E-02	6.6239E-07	0.0175
1.1392E+01	1.6848E-10	1.0000	1.0448E+00	6.7098E-05	0.0020	6.8303E-02	6.3058E-07	0.0179
1.1278E+01	1.0682E-09	0.3358	1.0237E+00	6.7663E-05	0.0020	6.7379E-02	1.3908E-06	0.0120
1.1165E+01	1.1129E-09	0.3348	1.0026E+00	2.5964E-05	0.0032	6.5216E-02	1.3184E-06	0.0124
1.1052E+01	1.0510E-09	0.3579	9.9441E-01	2.5625E-05	0.0032	6.3052E-02	1.1382E-06	0.0133

ALARM-TRAN-PB-SHIELD-001

Table F-2. Photon leakage from radial surface of lead shield and relative errors (cont)

Group upper energy (MeV)	Leakage	Rel. err.	Group upper energy (MeV)	Leakage	Rel. err.	Group upper energy (MeV)	Leakage	Rel. err.
1.0944E+01	1.2825E-09	0.3194	9.8622E-01	4.4702E-05	0.0021	6.0889E-02	1.0719E-06	0.0138
1.0836E+01	6.2801E-08	0.0426	9.7802E-01	2.5244E-05	0.0032	5.8725E-02	9.1317E-07	0.0149
1.0729E+01	1.2111E-09	0.3187	9.6983E-01	2.6932E-05	0.0031	5.6562E-02	3.2185E-07	0.0253
1.0621E+01	6.2147E-09	0.1995	9.6164E-01	3.3390E-05	0.0028	5.5745E-02	3.0327E-07	0.0258
1.0513E+01	2.0884E-09	0.2779	9.5075E-01	3.3081E-05	0.0028	5.4927E-02	2.9309E-07	0.0264
1.0410E+01	1.6402E-09	0.2689	9.3986E-01	3.3092E-05	0.0028	5.4110E-02	2.7588E-07	0.0274
1.0308E+01	8.2552E-09	0.1176	9.2896E-01	3.4828E-05	0.0027	5.3292E-02	2.6638E-07	0.0287
1.0205E+01	2.1407E-09	0.2612	9.1807E-01	3.2611E-05	0.0028	5.2475E-02	3.7081E-07	0.0235
1.0103E+01	9.4159E-08	0.0375	9.0718E-01	5.0598E-05	0.0019	5.1242E-02	3.6168E-07	0.0238
1.0000E+01	1.0503E-07	0.0332	8.9833E-01	1.6577E-04	0.0009	5.0009E-02	3.6202E-07	0.0240
9.9025E+00	6.2812E-09	0.1364	8.8948E-01	6.2288E-05	0.0017	4.8775E-02	3.3739E-07	0.0250
9.8049E+00	7.3286E-07	0.0157	8.8064E-01	2.8173E-05	0.0030	4.7542E-02	3.2321E-07	0.0255
9.7074E+00	1.2336E-08	0.1050	8.7179E-01	2.8699E-05	0.0029	4.6309E-02	2.8310E-07	0.0275
9.6098E+00	5.4629E-08	0.0469	8.6294E-01	4.6212E-05	0.0020	4.5221E-02	2.8065E-07	0.0271
9.5123E+00	4.3350E-08	0.0557	8.5452E-01	1.3018E-04	0.0011	4.4133E-02	2.4389E-07	0.0291
9.4195E+00	5.0274E-08	0.0519	8.4610E-01	2.8205E-05	0.0029	4.3044E-02	2.5159E-07	0.0299
9.3267E+00	5.5871E-06	0.0048	8.3769E-01	2.8577E-05	0.0029	4.1956E-02	2.3094E-07	0.0301
9.2340E+00	1.1331E-07	0.0332	8.2927E-01	2.8391E-05	0.0029	4.0868E-02	2.6200E-07	0.0284
9.1412E+00	5.7089E-08	0.0520	8.2085E-01	2.6456E-05	0.0030	3.9556E-02	2.3429E-07	0.0298
9.0484E+00	2.2256E-06	0.0087	8.1284E-01	2.6987E-05	0.0029	3.8244E-02	2.3621E-07	0.0298
8.9601E+00	3.3968E-06	0.0069	8.0484E-01	4.5566E-04	0.0005	3.6931E-02	2.1846E-07	0.0314
8.8719E+00	1.1506E-07	0.0344	7.9683E-01	3.0068E-05	0.0027	3.5619E-02	2.2405E-07	0.0309
8.7836E+00	8.5759E-08	0.0389	7.8883E-01	3.0401E-05	0.0027	3.4307E-02	8.0494E-08	0.0510
8.6954E+00	1.3995E-07	0.0293	7.8082E-01	2.8160E-05	0.0028	3.3811E-02	7.8357E-08	0.0533
8.6071E+00	1.1924E-06	0.0116	7.7320E-01	2.8662E-05	0.0027	3.3315E-02	7.0945E-08	0.0543
8.5231E+00	1.4273E-06	0.0117	7.6559E-01	2.7985E-05	0.0028	3.2820E-02	7.0168E-08	0.0556
8.4392E+00	5.0191E-07	0.0158	7.5797E-01	2.8777E-05	0.0027	3.2324E-02	6.9304E-08	0.0546
8.3552E+00	6.9024E-07	0.0131	7.5036E-01	3.0641E-05	0.0026	3.1828E-02	9.3942E-08	0.0479
8.2713E+00	1.9477E-07	0.0255	7.4274E-01	2.6350E-05	0.0029	3.1163E-02	9.7394E-08	0.0471
8.1873E+00	3.1564E-07	0.0216	7.3549E-01	2.5797E-05	0.0029	3.0497E-02	9.3944E-08	0.0478
8.1074E+00	1.2270E-07	0.0327	7.2825E-01	2.7110E-05	0.0028	2.9832E-02	9.4742E-08	0.0479
8.0276E+00	1.7149E-07	0.0294	7.2100E-01	2.5135E-05	0.0029	2.9166E-02	8.1540E-08	0.0522
7.9477E+00	1.9081E-06	0.0090	7.1376E-01	2.5243E-05	0.0029	2.8501E-02	3.4264E-08	0.0742
7.8679E+00	8.4710E-07	0.0135	7.0651E-01	2.4595E-05	0.0029	2.8201E-02	3.4178E-08	0.0758
7.7880E+00	4.9392E-07	0.0180	6.9962E-01	2.4454E-05	0.0029	2.7901E-02	3.3583E-08	0.0808
7.7120E+00	3.8639E-05	0.0018	6.9273E-01	2.6228E-05	0.0028	2.7600E-02	2.9975E-08	0.0830
7.6361E+00	4.5404E-05	0.0017	6.8584E-01	2.5098E-05	0.0029	2.7300E-02	2.9711E-08	0.0792
7.5601E+00	1.0488E-06	0.0124	6.7895E-01	2.3349E-05	0.0030	2.7000E-02	2.4966E-08	0.0992
7.4842E+00	7.0853E-07	0.0156	6.7206E-01	2.1972E-05	0.0031	2.6812E-02	2.1528E-08	0.1019
7.4082E+00	1.3230E-06	0.0115	6.6550E-01	5.2021E-05	0.0017	2.6623E-02	1.9661E-08	0.0977
7.3359E+00	1.0042E-05	0.0036	6.5895E-01	3.0556E-05	0.0024	2.6435E-02	2.1568E-08	0.1002
7.2637E+00	2.0723E-06	0.0088	6.5239E-01	2.1980E-05	0.0031	2.6246E-02	1.9854E-08	0.1020
7.1914E+00	1.0531E-06	0.0129	6.4584E-01	2.1773E-05	0.0031	2.6058E-02	2.3496E-08	0.0900
7.1192E+00	2.0346E-06	0.0090	6.3928E-01	2.0638E-05	0.0032	2.5804E-02	2.6249E-08	0.0867
7.0469E+00	1.0449E-06	0.0132	6.3304E-01	2.0539E-05	0.0032	2.5550E-02	2.5890E-08	0.0908
6.9782E+00	1.7983E-06	0.0096	6.2681E-01	2.0399E-05	0.0032	2.5296E-02	2.4227E-08	0.0858
6.9094E+00	1.2361E-06	0.0124	6.2057E-01	2.0181E-05	0.0032	2.5042E-02	2.3517E-08	0.0937
6.8407E+00	2.5286E-06	0.0083	6.1434E-01	2.0233E-05	0.0032	2.4788E-02	1.5494E-08	0.1235
6.7719E+00	2.3941E-06	0.0083	6.0810E-01	1.9024E-05	0.0033	2.4666E-02	1.1432E-08	0.1360
6.7032E+00	5.0243E-07	0.0191	6.0217E-01	1.9000E-05	0.0033	2.4543E-02	1.1330E-08	0.1360
6.6810E+00	5.0083E-07	0.0195	5.9624E-01	1.8674E-05	0.0033	2.4421E-02	1.3216E-08	0.1290

ALARM-TRAN-PB-SHIELD-001

Table F-2. Photon leakage from radial surface of lead shield and relative errors (cont)

Group upper energy (MeV)	Leakage	Rel. err.	Group upper energy (MeV)	Leakage	Rel. err.	Group upper energy (MeV)	Leakage	Rel. err.
6.6589E+00	1.2122E-06	0.0120	5.9030E-01	1.8376E-05	0.0033	2.4298E-02	1.1201E-08	0.1346
6.6367E+00	6.1773E-07	0.0169	5.8437E-01	4.3575E-05	0.0019	2.4176E-02	1.2562E-08	0.1355
6.6146E+00	5.6717E-07	0.0184	5.7844E-01	1.8523E-05	0.0033	2.4057E-02	1.2950E-08	0.1369
6.5924E+00	1.2862E-06	0.0119	5.7280E-01	2.1273E-04	0.0007	2.3937E-02	1.1100E-08	0.1344
6.5492E+00	1.8115E-06	0.0098	5.6716E-01	1.9074E-05	0.0032	2.3818E-02	1.0841E-08	0.1378
6.5060E+00	1.1030E-06	0.0133	5.6151E-01	1.8636E-05	0.0032	2.3698E-02	9.7229E-09	0.1342
6.4627E+00	1.2792E-06	0.0123	5.5587E-01	1.8737E-05	0.0032	2.3579E-02	3.2167E-08	0.0805
6.4195E+00	3.4371E-06	0.0068	5.5023E-01	1.7335E-05	0.0033	2.3238E-02	2.7255E-08	0.0885
6.3763E+00	2.4044E-06	0.0091	5.4486E-01	1.7404E-05	0.0033	2.2897E-02	3.1066E-08	0.0807
6.3141E+00	2.7175E-06	0.0084	5.3950E-01	7.3295E-05	0.0013	2.2557E-02	2.5177E-08	0.0889
6.2519E+00	2.6783E-06	0.0085	5.3413E-01	1.7293E-05	0.0033	2.2216E-02	2.8906E-08	0.0843
6.1897E+00	4.4173E-06	0.0062	5.2877E-01	1.7141E-05	0.0033	2.1875E-02	3.8990E-08	0.0736
6.1275E+00	3.2819E-06	0.0078	5.2340E-01	1.6179E-05	0.0034	2.1361E-02	4.1277E-08	0.0718
6.0653E+00	1.8087E-05	0.0028	5.1829E-01	2.3096E-05	0.0027	2.0847E-02	4.3346E-08	0.0656
6.0061E+00	3.8710E-06	0.0072	5.1319E-01	2.6835E-04	0.0009	2.0333E-02	3.8776E-08	0.0739
5.9470E+00	1.8494E-05	0.0028	5.0808E-01	1.8140E-05	0.0032	1.9819E-02	3.6371E-08	0.0760
5.8878E+00	3.6487E-06	0.0077	5.0298E-01	1.8104E-05	0.0032	1.9305E-02	6.0576E-08	0.0604
5.8287E+00	4.3398E-06	0.0070	4.9787E-01	3.3348E-05	0.0024	1.8451E-02	5.5341E-08	0.0620
5.7695E+00	5.1339E-06	0.0062	4.8839E-01	3.2825E-05	0.0024	1.7597E-02	4.6078E-08	0.0688
5.7132E+00	4.7960E-06	0.0067	4.7892E-01	3.2143E-05	0.0024	1.6742E-02	4.9990E-08	0.0664
5.6569E+00	5.1414E-06	0.0065	4.6944E-01	3.1321E-05	0.0024	1.5888E-02	4.7065E-08	0.0640
5.6007E+00	5.1173E-06	0.0066	4.5997E-01	3.1241E-05	0.0024	1.5034E-02	4.7560E-08	0.0686
5.5444E+00	6.1244E-06	0.0059	4.5049E-01	2.7319E-05	0.0026	1.4369E-02	5.3469E-08	0.0598
5.4881E+00	5.0698E-06	0.0067	4.4192E-01	2.6548E-05	0.0026	1.3704E-02	4.0029E-08	0.0707
5.4346E+00	5.2481E-06	0.0066	4.3334E-01	2.5822E-05	0.0027	1.3039E-02	8.5015E-08	0.0497
5.3811E+00	5.1136E-06	0.0067	4.2477E-01	2.5433E-05	0.0027	1.2374E-02	8.2954E-08	0.0518
5.3275E+00	5.9483E-06	0.0060	4.1619E-01	2.5231E-05	0.0027	1.1709E-02	2.6966E-08	0.0878
5.2740E+00	6.1518E-06	0.0059	4.0762E-01	1.1358E-05	0.0040	1.1486E-02	3.5909E-06	0.0073
5.2205E+00	5.6494E-06	0.0062	4.0364E-01	1.1295E-05	0.0040	1.1263E-02	2.4088E-08	0.0914
5.1696E+00	5.6573E-06	0.0062	3.9967E-01	1.2340E-05	0.0038	1.1041E-02	2.4439E-08	0.0947
5.1187E+00	5.7886E-06	0.0061	3.9569E-01	1.1128E-05	0.0041	1.0818E-02	2.5791E-08	0.0958
5.0677E+00	6.7150E-06	0.0055	3.9172E-01	1.0985E-05	0.0041	1.0595E-02	3.2592E-08	0.0841
5.0168E+00	5.9066E-06	0.0061	3.8774E-01	1.0645E-05	0.0042	1.0300E-02	2.8476E-08	0.0864
4.9659E+00	7.6431E-06	0.0052	3.8396E-01	1.0227E-05	0.0042	1.0005E-02	3.0176E-08	0.0909
4.9175E+00	6.1606E-06	0.0060	3.8018E-01	1.0321E-05	0.0042	9.7093E-03	2.3820E-08	0.0959
4.8690E+00	6.8367E-06	0.0056	3.7639E-01	1.2218E-05	0.0038	9.4140E-03	2.7828E-08	0.0904
4.8206E+00	9.3205E-06	0.0045	3.7261E-01	9.9762E-06	0.0043	9.1188E-03	3.4566E-08	0.0794
4.7721E+00	7.2704E-06	0.0054	3.6883E-01	2.6545E-05	0.0025	8.7154E-03	2.8010E-08	0.0817
4.7237E+00	7.2553E-06	0.0055	3.6181E-01	1.8380E-05	0.0032	8.3120E-03	3.2620E-08	0.0847
4.6776E+00	8.0270E-06	0.0052	3.5479E-01	2.2233E-05	0.0028	7.9085E-03	2.4426E-08	0.0908
4.6315E+00	9.3488E-06	0.0047	3.4777E-01	2.2475E-05	0.0028	7.5051E-03	2.9678E-08	0.0902
4.5855E+00	7.8875E-06	0.0053	3.4075E-01	1.7593E-05	0.0033	7.1017E-03	3.0162E-08	0.0748
4.5394E+00	8.5205E-06	0.0051	3.3373E-01	1.6228E-05	0.0034	6.7875E-03	1.8042E-08	0.0986
4.4933E+00	1.6909E-05	0.0036	3.2738E-01	1.5396E-05	0.0035	6.4733E-03	1.0477E-07	0.0421
4.4078E+00	1.9567E-05	0.0034	3.2103E-01	1.6708E-05	0.0034	6.1592E-03	1.6402E-08	0.1102
4.3223E+00	1.8639E-05	0.0036	3.1467E-01	1.5996E-05	0.0035	5.8450E-03	1.3815E-08	0.1170
4.2367E+00	2.7224E-05	0.0028	3.0832E-01	1.5066E-05	0.0036	5.5308E-03	9.4677E-09	0.1377
4.1512E+00	3.6009E-05	0.0023	3.0197E-01	1.6909E-06	0.0111	5.2861E-03	1.2763E-08	0.1388
4.0657E+00	2.0028E-05	0.0036	3.0127E-01	1.6329E-06	0.0111	5.0414E-03	1.0474E-08	0.1329
3.9883E+00	2.3479E-05	0.0032	3.0058E-01	1.6344E-06	0.0110	4.7968E-03	1.0041E-08	0.1428
3.9109E+00	2.1412E-05	0.0036	2.9988E-01	1.6214E-06	0.0110	4.5521E-03	8.1042E-09	0.1607

Table F-2. Photon leakage from radial surface of lead shield and relative errors (cont)

Group upper energy (MeV)	Leakage	Rel. err.	Group upper energy (MeV)	Leakage	Rel. err.	Group upper energy (MeV)	Leakage	Rel. err.
3.8336E+00	2.1734E-05	0.0036	2.9919E-01	1.6601E-06	0.0110	4.3074E-03	2.7011E-09	0.2049
3.7562E+00	2.3918E-05	0.0034	2.9849E-01	5.9595E-07	0.0176	4.1874E-03	2.8096E-09	0.2513
3.6788E+00	2.3189E-05	0.0035	2.9823E-01	5.8992E-07	0.0186	4.0674E-03	2.3104E-09	0.2711
3.6088E+00	2.5631E-05	0.0033	2.9798E-01	5.9040E-07	0.0180	3.9474E-03	3.9308E-09	0.2384
3.5388E+00	2.5488E-05	0.0033	2.9772E-01	5.8168E-07	0.0183	3.8274E-03	2.2149E-09	0.2550
3.4687E+00	3.2933E-05	0.0028	2.9747E-01	5.8162E-07	0.0183	3.7074E-03	4.3760E-10	0.5000
3.3987E+00	2.9945E-05	0.0031	2.9721E-01	1.2440E-06	0.0126	3.6368E-03	1.9564E-09	0.2984
3.3287E+00	1.6567E-05	0.0040	2.9667E-01	1.2803E-06	0.0128	3.5663E-03	1.2059E-09	0.3767
3.2962E+00	1.6705E-05	0.0040	2.9613E-01	1.2578E-06	0.0127	3.4957E-03	1.3420E-09	0.4228
3.2638E+00	1.5692E-05	0.0042	2.9560E-01	1.2708E-06	0.0124	3.4252E-03	1.9127E-09	0.3426
3.2313E+00	1.6297E-05	0.0042	2.9506E-01	1.2522E-06	0.0128	3.3546E-03	1.8763E-09	0.2805
3.1989E+00	1.7221E-05	0.0040	2.9452E-01	3.3966E-06	0.0077	3.2908E-03	1.1177E-09	0.4073
3.1664E+00	1.5863E-05	0.0043	2.9307E-01	3.3820E-06	0.0077	3.2269E-03	7.6656E-10	0.3780
3.1355E+00	1.6346E-05	0.0043	2.9161E-01	3.2900E-06	0.0077	3.1631E-03	1.5313E-09	0.3192
3.1046E+00	1.8069E-05	0.0040	2.9016E-01	3.6193E-06	0.0073	3.0992E-03	5.4703E-10	0.4472
3.0737E+00	1.7757E-05	0.0041	2.8870E-01	3.3513E-06	0.0077	3.0354E-03	1.2301E-09	0.4291
3.0428E+00	1.8605E-05	0.0040	2.8725E-01	6.4738E-06	0.0057	2.9776E-03	1.2984E-09	0.4064
3.0119E+00	2.0523E-05	0.0036	2.8445E-01	6.5259E-06	0.0056	2.9198E-03	2.2556E-09	0.3604
2.9825E+00	1.8895E-05	0.0039	2.8165E-01	6.4507E-06	0.0057	2.8621E-03	1.2325E-09	0.3734
2.9532E+00	1.8828E-05	0.0040	2.7884E-01	1.0231E-05	0.0041	2.8043E-03	1.8319E-09	0.3750
2.9238E+00	1.9145E-05	0.0040	2.7604E-01	6.3460E-06	0.0057	2.7465E-03	1.0822E-10	1.0000
2.8945E+00	2.0567E-05	0.0038	2.7324E-01	1.1722E-05	0.0042	2.7197E-03	4.3665E-10	0.5000
2.8651E+00	2.1991E-05	0.0036	2.6804E-01	1.1685E-05	0.0043	2.6929E-03	6.8908E-10	0.7183
2.8371E+00	2.1433E-05	0.0037	2.6284E-01	1.1978E-05	0.0043	2.6662E-03	8.8596E-10	0.4719
2.8092E+00	2.0834E-05	0.0038	2.5764E-01	1.1910E-05	0.0042	2.6394E-03	2.3488E-10	0.7084
2.7812E+00	2.3275E-05	0.0035	2.5244E-01	1.1515E-05	0.0044	2.6126E-03	0.0000E+00	0.0000
2.7533E+00	2.3930E-05	0.0034	2.4724E-01	5.3467E-06	0.0064	2.5871E-03	7.1879E-10	0.6038
2.7253E+00	2.4995E-05	0.0033	2.4483E-01	5.3027E-06	0.0065	2.5616E-03	7.0486E-10	0.4100
2.6987E+00	2.5641E-05	0.0033	2.4242E-01	5.3328E-06	0.0065	2.5362E-03	4.2010E-10	0.7840
2.6721E+00	2.6279E-05	0.0032	2.4000E-01	5.2639E-06	0.0065	2.5107E-03	3.3016E-10	0.5774
2.6456E+00	2.7506E-05	0.0032	2.3759E-01	5.2387E-06	0.0065	2.4852E-03	2.1062E-09	0.3435
2.6190E+00	3.8183E-04	0.0006	2.3518E-01	6.8470E-06	0.0053	2.4379E-03	2.7099E-09	0.2495
2.5924E+00	3.0078E-05	0.0029	2.3289E-01	4.9365E-06	0.0067	2.3906E-03	3.3436E-09	0.2620
2.5671E+00	3.0308E-05	0.0029	2.3059E-01	5.2503E-06	0.0064	2.3433E-03	4.1438E-09	0.2260
2.5418E+00	3.1549E-05	0.0029	2.2830E-01	5.0398E-06	0.0068	2.2960E-03	2.5946E-09	0.2622
2.5166E+00	2.9799E-05	0.0030	2.2600E-01	4.9183E-06	0.0069	2.2487E-03	1.9007E-09	0.3414
2.4913E+00	3.0187E-05	0.0030	2.2371E-01	4.6820E-06	0.0070	2.2059E-03	3.0781E-09	0.2633
2.4660E+00	1.9093E-05	0.0038	2.2153E-01	4.5886E-06	0.0070	2.1631E-03	1.9911E-09	0.3880
2.4498E+00	1.8838E-05	0.0039	2.1935E-01	4.6516E-06	0.0070	2.1203E-03	2.0632E-09	0.3506
2.4337E+00	1.9324E-05	0.0038	2.1716E-01	4.6174E-06	0.0070	2.0775E-03	3.8592E-09	0.2286
2.4175E+00	1.9436E-05	0.0038	2.1498E-01	4.5282E-06	0.0072	2.0347E-03	3.9468E-09	0.2528
2.4014E+00	1.9747E-05	0.0038	2.1280E-01	4.7905E-06	0.0067	1.9447E-03	4.6728E-09	0.2441
2.3852E+00	4.7980E-06	0.0077	2.1072E-01	4.3572E-06	0.0073	1.8547E-03	3.5851E-09	0.2510
2.3812E+00	4.8062E-06	0.0077	2.0865E-01	4.3112E-06	0.0073	1.7646E-03	3.0754E-09	0.2748
2.3772E+00	4.8337E-06	0.0077	2.0657E-01	4.3661E-06	0.0074	1.6746E-03	2.1984E-09	0.2567
2.3733E+00	4.9240E-06	0.0076	2.0450E-01	4.3492E-06	0.0073	1.5846E-03	2.7309E-09	0.3341
2.3693E+00	4.8541E-06	0.0077	2.0242E-01	4.0492E-06	0.0076	1.5145E-03	1.6658E-09	0.3448
2.3653E+00	4.7723E-06	0.0078	2.0045E-01	4.0590E-06	0.0076	1.4444E-03	3.2185E-09	0.2664
2.3614E+00	4.7174E-06	0.0078	1.9847E-01	4.0451E-06	0.0076	1.3743E-03	1.2738E-09	0.3426
2.3575E+00	4.9427E-06	0.0076	1.9650E-01	3.9295E-06	0.0077	1.3042E-03	3.1574E-09	0.2545
2.3535E+00	4.9572E-06	0.0076	1.9452E-01	3.9305E-06	0.0078	1.2341E-03	2.0854E-09	0.3198

ALARM-TRAN-PB-SHIELD-001

Table F-2. Photon leakage from radial surface of lead shield and relative errors (cont)

Group upper energy (MeV)	Leakage	Rel. err.	Group upper energy (MeV)	Leakage	Rel. err.	Group upper energy (MeV)	Leakage	Rel. err.
2.3496E+00	4.9172E-06	0.0076	1.9255E-01	3.7092E-06	0.0080	1.1795E-03	1.5908E-09	0.3403
2.3457E+00	9.6180E-06	0.0055	1.9067E-01	3.7534E-06	0.0081	1.1249E-03	2.2708E-09	0.3145
2.3379E+00	9.6231E-06	0.0055	1.8879E-01	3.7230E-06	0.0080	1.0703E-03	1.8746E-09	0.3116
2.3302E+00	9.8097E-06	0.0054	1.8692E-01	3.6242E-06	0.0080	1.0157E-03	6.1684E-10	0.5625
2.3224E+00	1.4023E-05	0.0041	1.8504E-01	4.1712E-06	0.0072	1.0000E-03 (Minimum energy)		
2.3147E+00	1.0043E-05	0.0053	1.8316E-01	3.4656E-06	0.0083			
2.3069E+00	1.9470E-05	0.0038	1.8137E-01	3.4564E-06	0.0084			

APPENDIX G: DISCUSSION OF CAAS DETECTOR PERFORMANCE

G.1 CIDAS MkX CAAS

Babcock International Group, now known as Cavendish Nuclear, is working to release their internal report concerning the CIDAS MkX detector. At the time of publication, it was not available for public release.

G.2 Rocky Flats CAAS

Lawrence Livermore National Laboratory provided several CAAS detectors that had been used at Rocky Flats. Below are 2 LLNL reports that discuss their performance.

NEA/NSC/DOC(95)03/VIII
Volume VIII

LLNL-TR-466251

ALARM-TRAN-PB-SHIELD-001

LAWRENCE
LIVERMORE
NATIONAL
LABORATORY

Rocky Flats Neutron Detector Testing at Valduc, France

G. M. Dulik and S. S. Kim

January 18, 2011

Approved for public release; distribution is unlimited.

ALARM-TRAN-PB-SHIELD-001

Disclaimer

This document was prepared as an account of work sponsored by an agency of the United States government. Neither the United States government nor Lawrence Livermore National Security, LLC, nor any of their employees makes any warranty, expressed or implied, or assumes any legal liability or responsibility for the accuracy, completeness, or usefulness of any information, apparatus, product, or process disclosed, or represents that its use would not infringe privately owned rights. Reference herein to any specific commercial product, process, or service by trade name, trademark, manufacturer, or otherwise does not necessarily constitute or imply its endorsement, recommendation, or favoring by the United States government or Lawrence Livermore National Security, LLC. The views and opinions of authors expressed herein do not necessarily state or reflect those of the United States government or Lawrence Livermore National Security, LLC, and shall not be used for advertising or product endorsement purposes.

Auspices Statement

This work performed under the auspices of the U.S. Department of Energy by Lawrence Livermore National Laboratory under Contract DE-AC52-07NA27344.

ALARM-TRAN-PB-SHIELD-001

1. INTRODUCTION

Recent program requirements of the US Department of Energy/NNSA have led to a need for a criticality accident alarm system to be installed at a newly activated facility. The Criticality Safety Group of the Lawrence Livermore National Laboratory (LLNL) was able to recover and store for possible future use approximately 200 neutron criticality detectors and 20 master alarm panels from the former Rocky Flats Plant in Golden, Colorado when the plant was closed. The Criticality Safety Group participated in a facility analysis and evaluation, the engineering design and review process, as well as the refurbishment, testing, and recalibration of the Rocky Flats criticality alarm system equipment to be used in the new facility.

In order to demonstrate the functionality and survivability of the neutron detectors to the effects of an actual criticality accident, neutron detector testing was performed at the French CEA Valduc SILENE reactor from October 7 to October 19, 2010. The neutron detectors were exposed to three criticality events or pulses generated by the SILENE reactor. The first excursion was performed with a bare or unshielded reactor, and the second excursion was made with a lead shielded/reflected reactor, and the third excursion with a polyethylene reflected core.

These tests of the Rocky Flats neutron detectors were performed as a part of the 2010 Criticality Accident Alarm System Benchmark Measurements at the SILENE Reactor. The principal investigators for this series of experiments were Thomas M. Miller and John C. Wagner of the Oak Ridge National Laboratory, with Nicolas Authier and Nathalie Baclet of CEA Valduc. Several other organizations were also represented, including the Y-12 National Security Complex, Lawrence Livermore National Laboratory, Los Alamos National Laboratory, CEA Saclay, and Babcock International Group.

2. DETECTORS

Several weeks prior to the experiment, a number of detectors (12) were selected from LLNL stock and processed through the alignment and calibration procedures (Reference 1) that Rocky Flats had developed and refined over approximately 15 years of experience with this basic design. The process consists of two primary phases, the first phase being electrical and mechanical bench checks including electronic adjustments and alignment of the detector subunits, and the second phase being an irradiation with a well characterized neutron source, typically a TRIGA reactor. Detector calibration at LLNL and TRIGA reactor testing procedures were videotaped in a DVD (Reference 2). Two detectors showing LCD display and LED alarm indicator, tested with a moderated californium source at LLNL are shown in Figure 1.

ALARM-TRAN-PB-SHIELD-001

Figure 1. Rocky Flats Neutron Detectors.

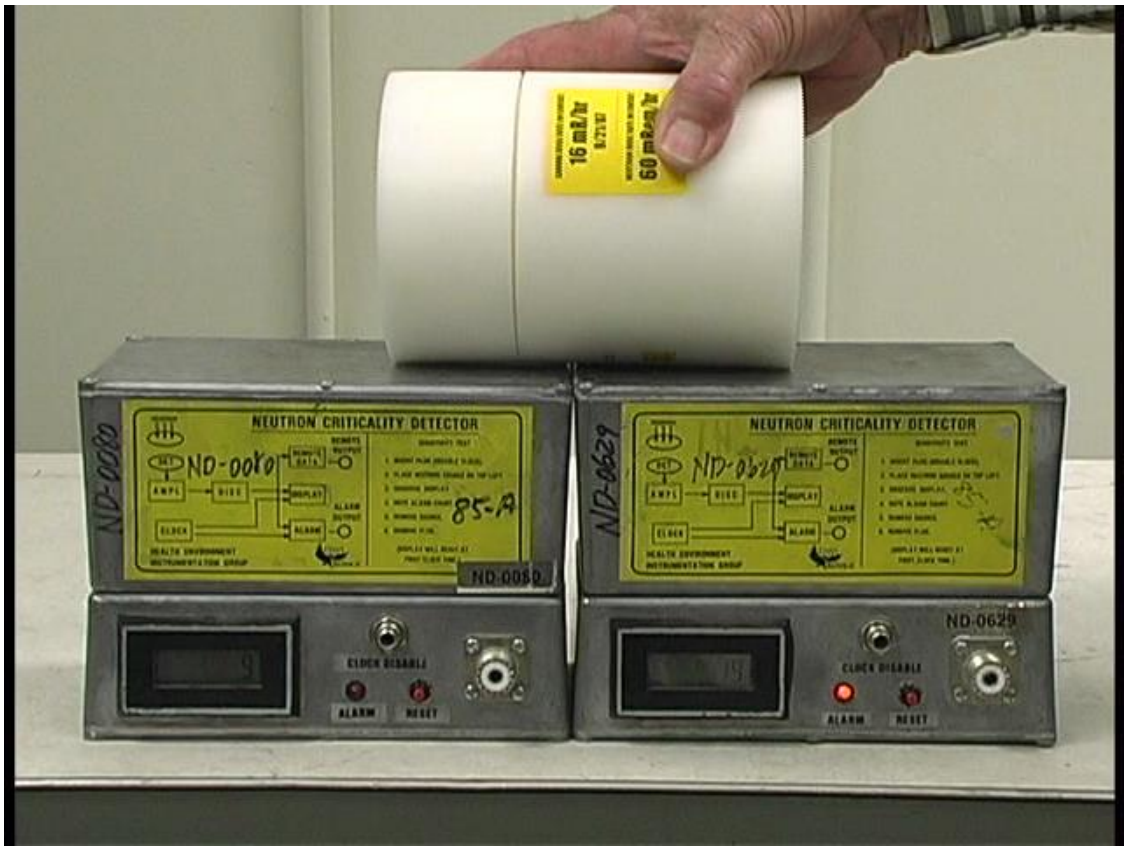

LLNL personnel performed the initial bench checks, adjustments, and tests during the first two weeks of September, 2010. On September 17, 2010 the detectors were taken to the UC Davis McClellan Nuclear Research Center in Sacramento, California for the neutron source response tests.

Detector count rates and the thermal neutron flux for the four detectors used at Valduc are shown in Table 1.

Table 1. Detector Count Rate vs. Thermal Flux.

Detector No.	Detector ID	Detector Count rate Avg. of 3 1 minute tests (cpm)	Thermal Neutron Flux (n/cm^2-sec)	Detector Normalization Factor Count Rate / Thermal Flux
D1	ND-0028	13,261	551	24.07
D2	ND-0242	6,779	585	11.59
D3	ND-0632	4,226	549	7.70
D4	ND-0450	8,177	569	14.37

As shown in Table 1, a detector efficiency or normalization factor was derived so the counts from each detector/location pair used in the experiment could be compared on a common basis.

3. DETECTOR PLACEMENT

Four neutron detectors were placed in the experimental area, three inside and one outside the reactor cell (see Figure 2). Table 2 identifies the detector serial number that was placed at each of the four locations for the experiments.

Table 2. Four detectors used in the experiments.

Detector No.	Location	Configuration	Detector ID
D1	Collimator B	Concrete shield	ND-0028
D2	Collimator A	Unshielded	ND-0242
D3	Scattering box	Partially shielded	ND-0632
D4	Outside reactor cell	Heavy cell wall shield	ND-0450

The collimators are box-shaped structures having five solid sides with an open sixth side facing the reactor. The side of the collimator facing the reactor is 1 m x 1 m. The other dimension of the box is 0.65 m. The collimator walls are constructed of stainless steel, copper, lead, and borated polyethylene.

ALARM-TRAN-PB-SHIELD-001

Figure 2. Four Detectors Placed at collimator B, collimator A, Scattering box and outside reactor cell.

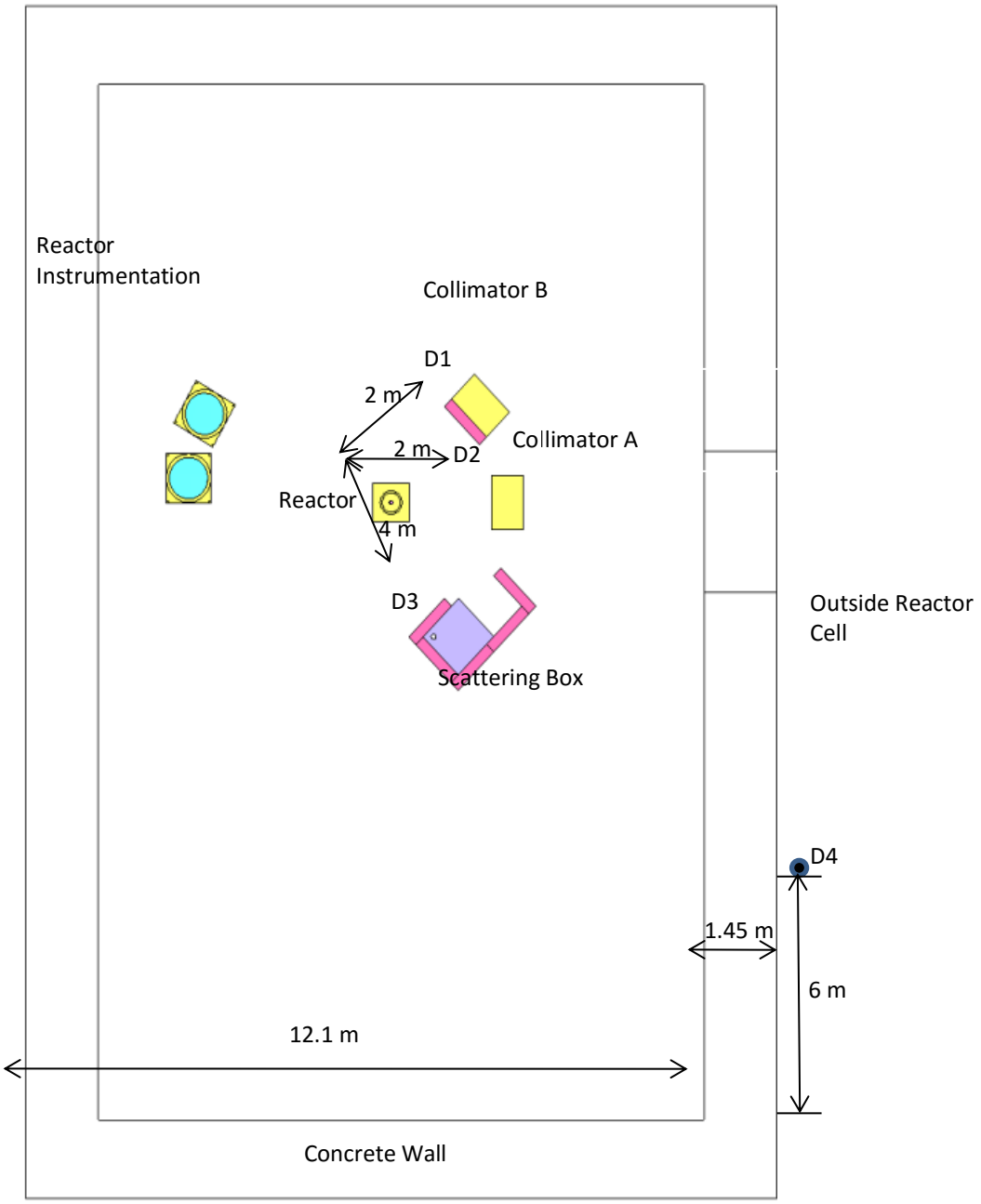

The purpose of the collimator box in these experiments is to effectively eliminate the contribution from particles that scatter in the walls or other equipment in the reactor cell. Detectors in the collimator box, if the collimator is shielded, will primarily measure the transmission of particles through the shielding materials. A detector inside an unshielded collimator will primarily measure direct radiation from the reactor. For these experiments, collimator A was used unshielded, and collimator B was used in a shielded configuration. The distance from the center of the reactor to collimator A, collimator B, and scattering box are 2, 2, and 4 m, respectively.

The scattering box refers to a detector placement and configuration of shielding materials such that there is no direct line of sight from the reactor to the detectors. Therefore, the majority of the measured neutron radiation will have been scattered and a majority of the measured photon radiation are secondary photons produced by neutrons.

4. EXPERIMENTAL OBSERVATIONS

During the experiments, the neutron detector LED alarm indicator was checked to verify that the detector alarmed during criticality accident situations, and the integrated counts displayed on each detector's front panel LCD display were recorded to determine the relative levels of thermal neutron fluence detected by the unit at each of the four locations. A pulse output available on the rear of each detector was connected to a data acquisition system that was setup and controlled by a laptop computer system in an area adjacent to the reactor control room. The system had an independent counter for each detector channel, and logged the data onto a micro SD data card for later analysis.

October 7, 2010 (Thursday): LLNL staff arrived at the Valduc facility with detectors and instrumentation. After arranging access, the equipment was transported to the SILENE facility. The Rocky Flats neutron detectors and other materials were unpacked and inspected for damage. No damage was evident to any of the materials. The internal batteries of the neutron detectors were given a refresh charge to bring them to full capacity. The experimental plan was reviewed and detector placement was discussed with the other experimenters and the Valduc staff.

October 8, 2010 (Friday): Four detectors were placed in the experimental reactor cell in the locations indicated in Figure 2. Due to the minimal cabling available from the reactor cell to the diagnostic area, we were not able to use a line-operated DC power supply to provide latching power for the criticality alarm LEDs as originally planned. Normally this power is provided from the criticality alarm system central panel over the common power and alarm transmission link. External battery packs with dry cell batteries were installed on each detector to power the front-panel criticality alarm indicator LED. The available cables were patched from the detector at each of the four locations and routed to the diagnostic room adjacent to the reactor control room. The detector cables were connected to a laptop computer data acquisition system to record the event pulses from each detector.

October 11, 2010 (Monday): The first pulse, a size of 1.9×10^{17} fissions, was generated in 1.7 msec by a bare reactor. Magnetite concrete with a density of 3.9 g/cm^3 and a 20 cm-thick slab was used as the shielding for collimator B. Due to communication difficulties between the reactor control room operator and the data

acquisition operator, the data collection was not triggered until briefly after the initial critical pulse had occurred. Data was recorded for 37 seconds after triggering and are summarized in Table 3.

Table 3. Integrated Counts Recorded on Laptop / Logger for Pulse #1.
t = 37 seconds

Detector No.	Location	Detector ID	Integrated Counts
D1	Collimator B	ND-0028	847,314
D2	Collimator A	ND-0242	834,028
D3	Scattering box	ND-0632	642,368
D4	Outside reactor cell	ND-0450	10,187

Table 3 integrated counts were then divided by the adjustment factors in Table 1 to get the normalized counts. Table 4 summarizes these counts.

Table 4. Normalized Logged Counts for Pulse #1.
t = 37 seconds

Detector No.	Location	Detector ID	Integrated Counts	Normalization Factor	Normalized Counts
D1	Collimator B	ND-0028	847,314	24.07	35,206
D2	Collimator A	ND-0242	834,028	11.59	71,973
D3	Scattering box	ND-0632	642,368	7.70	83,446
D4	Outside reactor cell	ND-0450	10,187	14.37	709

Approximately four hours after the pulse, when activation and radiation levels had decreased enough to allow safe access to the reactor cell, experimenters entered the cell to retrieve the foils and record the LCD readout displays on the criticality detectors. The counts shown on the detector LCD displays were recorded as shown in Table 5. The LCD counts for D4 were not recorded because an assigned record-keeper was in a hurry to exit the reactor area. Criticality alarm indicator LEDs were illuminated on all detectors as expected. The power was removed from the detectors after the observations were made in order to preserve the battery life. According to Tables 4 and 5, thermal neutron fluence is highest at the detector of the scattering box, collimator A, collimator B, and outside reactor cell, in the descending order.

Table 5. Normalized Counts Shown on LCD for Pulse #1.
t = 37 seconds

Detector No.	Location	Detector ID	LCD Counts	Normalization Factor	Normalized Counts	Alarm LED lit?
D1	Collimator B	ND-0028	530,935	24.07	22,058	Yes
D2	Collimator A	ND-0242	907,587	11.59	78,308	Yes
D3	Scattering box	ND-0632	967,609	7.70	125,664	Yes
D4	Outside reactor cell	ND-0450	*	14.37	----	Yes

*Not recorded.

October 12, 2010 (Tuesday): Preparation for the second pulse was made. To avoid the communication problems that caused the first data recording to be started late, it was decided to start recording well before the event trigger. The data acquisition software was modified to record for a longer period, which was set to correspond with a file size of 192 MB, or 8.06 minutes. Operation of the modified software was verified, and simulated inputs on all detector channels were logging correctly to the memory card. A meeting was held in the afternoon with the Valduc radiation physics and dosimetry group staff and the experimenters to discuss early dosimetry and activation analysis results of the first pulse.

October 13, 2010 (Wednesday): Prior to the second pulse, the experimenters entered the reactor cell to place the new foils and repower the criticality detectors. The voltage of the internal batteries in each of the neutron detectors was measured and found to within specification. The external battery packs which power the criticality alarm LED and latch were evaluated for condition. The external dry cell batteries on all of the detectors except for the unit in the scattering box were found to be in a discharged, low-voltage condition and were replaced.

The second pulse, a size of 2.1×10^{17} fissions, was generated by the lead reflected SILENE reactor. The concrete shielding slab for collimator B had been changed to one constructed of regular concrete, having a density of 2.3 g/cc. The logging software was started well in advance of the reactor pulse in order to capture the initial events. An examination of the recorded data shows the initiation of the criticality as reflected by the count rates at 1.59 minutes into the data record. The data recorded by the logger is summarized in Table 6.

Table 6. Normalized Logged Counts for Pulse #2
t = 484 seconds

Detector No.	Location	Detector ID	Integrated Counts	Normalization Factor	Normalized Counts
D1	Collimator B	ND-0028	0	24.07	----
D2	Collimator A	ND-0242	1,780,150	11.59	153,594
D3	Scattering box	ND-0632	0	7.70	----
D4	Outside reactor cell	ND-0450	10,751	14.37	748

Note that there was no data recorded for detector channels D1 and D3. Examination of the detectors indicated that they were functional. After the pulse, a local simulation test at the data logger showed that it was correctly logging data applied to all inputs, including channels D1 and D3. The cause of the missed data is unknown at this time.

Approximately four hours after Pulse #2 when activation and radiation levels had decreased enough to allow safe access to the reactor cell, experimenters entered the cell to retrieve the foils and record the LCD readout displays on the detectors. The counts shown on the detector LCD displays were recorded as shown in Table 7. Criticality alarm indicator LEDs were illuminated on Detectors 1, 2, and 4. According to the normalized counts, thermal neutron fluence is highest at the detector of the scattering box, collimator A, collimator B, and outside reactor cell in the descending order.

Table 7. Normalized Counts Shown on LCD for Pulse #2
t = 484 seconds

Detector No.	Location	Detector ID	LCD Counts	Normalization Factor	Normalized Counts	Alarm LED lit?
D1	Collimator B	ND-0028	550,381	24.07	22,866	Yes
D2	Collimator A	ND-0242	737,656	11.59	63,656	Yes
D3	Scattering box	ND-0632	892,989	7.70	115,973	No
D4	Outside reactor cell	ND-0450	10,358	14.37	721	Yes

No indicator was reported as lit on detector 3, located in the scattering box. The detector appears to have been functional, as the LCD was operating and indicating a reasonable number. The scattering box detector did not have new dry cells installed for this test. If the cells have a low capacity, the alarm LED will not remain illuminated.

Figures 3 and 4 show accumulated counts versus record number (time) for Pulse #2 for two time scales. These data were obtained from the laptop computer data acquisition system. As shown in the short time scale in Figure 4, initial slope on D2/counter 2 looks almost like an exponential, indicating the start of the short pulse. The accumulated counts are supposed to be saturated after the pulse, but the reason for continued increase is not known at the time of this writing.

Figure 3. Accumulated Counts up to Record Number 1951.

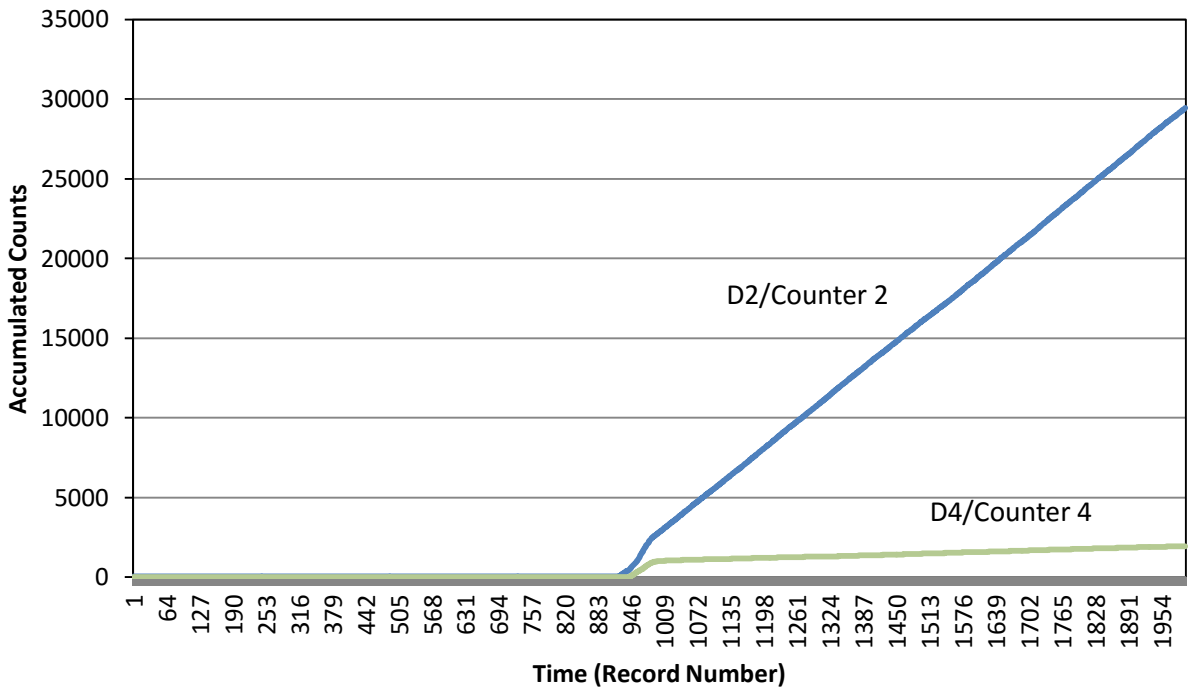

ALARM-TRAN-PB-SHIELD-001

Figure 4. Accumulated Counts up to Record Number 497.

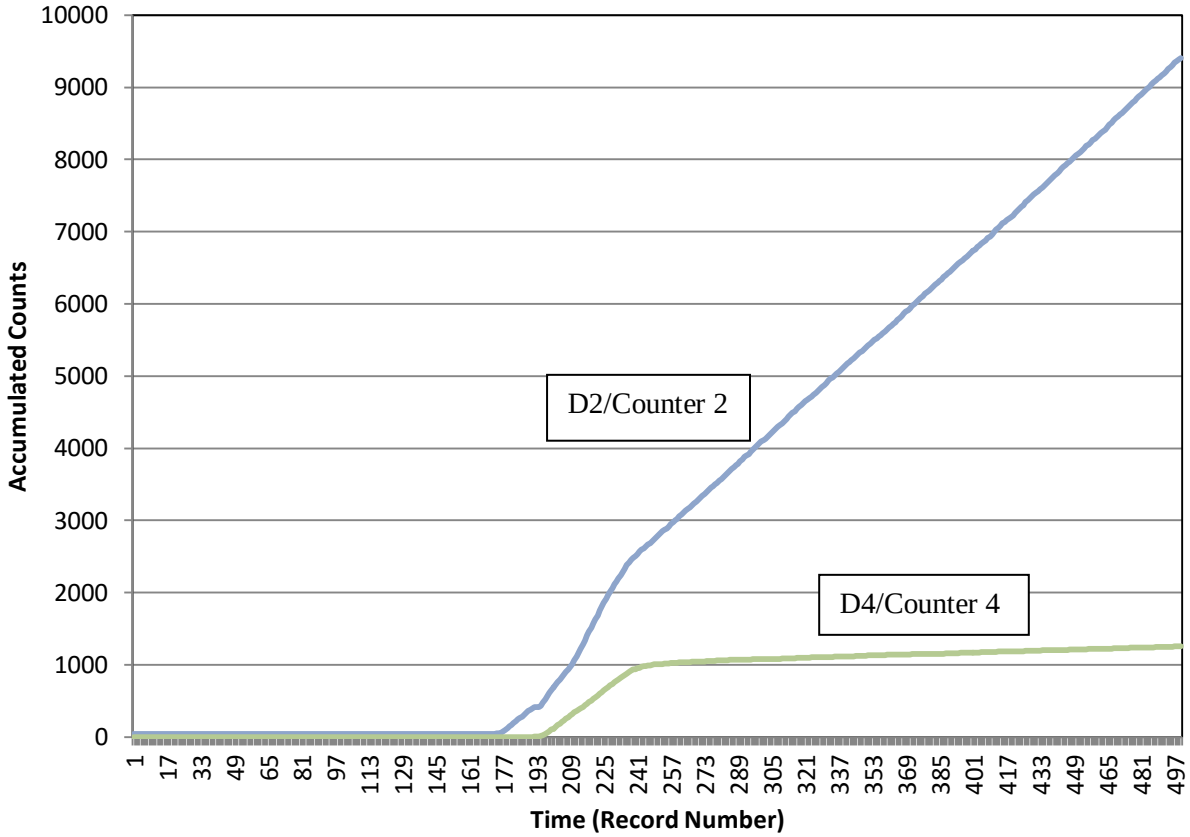

LLNL staff left Valduc on October 13, 2010, but the four detectors were left there to obtain more data for additional pulses. On January 11, 2011, Richard Hunter from Babcock International provided additional measurement data for Pulse #3. This last pulse was made by a polyethylene reflected SILENE reactor on **October 19, 2010 (Tuesday)**. Table 8 summarizes integrated and normalized counts for the four detectors. Criticality alarm indicator LEDs were illuminated on all detectors except D3 of the scattering box, and the thermal neutron fluence was highest at D2 of collimator A instead of D3 in the scattering box.

Table 8. Normalized Counts Shown in LCD for Pulse #3.

Detector No.	Location	Detector ID	Integrated Counts	Normalization Factor	Normalized Counts	Alarm LED lit?
D1	Collimator B	ND-0028	466,532	24.07	19,382	Yes
D2	Collimator A	ND-0242	806,862	11.59	69,617	Yes
D3	Scattering box	ND-0632	516,776	7.70	67,114	No
D4	Outside reactor cell	ND-0450	1658	14.37	115	Yes

5. SUMMARY

According to the experimental results, thermal neutron fluence was highest at the detector in the scattering box for Pulses #1, and #2. For Pulse #3, the thermal neutron fluence was highest at the detector of collimator A. Criticality alarm indicator LEDs were illuminated on detectors as expected. The Rocky Flats neutron detectors appeared to have functioned as intended in an actual criticality situation.

When the detectors can be released from the SILENE radioactive material control area, they will be shipped back to LLNL. When the detectors arrive at LLNL, they will be inspected and tested according to the calibration procedure they went through prior to the experiment. Data recorded in this process will be compared to the previous data to determine if there has been any significant change in electrical parameters.

6. REFERENCES

1). Annual Calibration of Model 85A and NCD-91 Neutron Criticality Detectors, 4-16000-RI-4301, Rocky Flats Plant (December 1993).
2). Calibration of DAF Criticality Accident Alarm System, LLNL-VIDEO-402771 (March 2009).

NEA/NSC/DOC(95)03/VIII
Volume VIII

LLNL-ABS-467896

ALARM-TRAN-PB-SHIELD-001

LAWRENCE
LIVERMORE
NATIONAL
LABORATORY

Cs-137 Gamma Ray Shots for Rocky Flats Neutron Detectors

G. M. Dulik and S. S. Kim

January 26, 2011

Approved for public release; distribution is unlimited.

ALARM-TRAN-PB-SHIELD-001

Disclaimer

This document was prepared as an account of work sponsored by an agency of the United States government. Neither the United States government nor Lawrence Livermore National Security, LLC, nor any of their employees makes any warranty, expressed or implied, or assumes any legal liability or responsibility for the accuracy, completeness, or usefulness of any information, apparatus, product, or process disclosed, or represents that its use would not infringe privately owned rights. Reference herein to any specific commercial product, process, or service by trade name, trademark, manufacturer, or otherwise does not necessarily constitute or imply its endorsement, recommendation, or favoring by the United States government or Lawrence Livermore National Security, LLC. The views and opinions of authors expressed herein do not necessarily state or reflect those of the United States government or Lawrence Livermore National Security, LLC, and shall not be used for advertising or product endorsement purposes.

Auspices Statement

This work performed under the auspices of the U.S. Department of Energy by Lawrence Livermore National Laboratory under Contract DE-AC52-07NA27344.

ALARM-TRAN-PB-SHIELD-001

Cs-137 Gamma Ray Shots for Rocky Flats Neutron Detectors

G. M. Dulik and S. S. Kim
Lawrence Livermore National Laboratory

Gamma ray exposure testing was performed on January 19, 2011 at a gamma ray irradiation facility in the Lawrence Livermore National Laboratory. A ^{137}Cs source was elevated to exposures indicated by a calibrated meter on a trolley. The detector (References 1 and 2) under test was then placed on the trolley and exposed for a one minute period. The test jack was inserted in its port on the front of the detector to allow the counter to accumulate.

Table 1 summarizes test results. There were no alarms at 100 mR/hr gamma ray field. Note that the detector alarms at 16 counts per sec. At 650 mR/hr and above, all the detectors alarmed, indicating that the detector is sensitive to a gamma field. Four detectors alarmed at 1 R/hr even when lithium fluoride disk was removed from the detector.

This testing showed that the neutron detector is responding in a mixed field of neutron and gamma ray. It can be a feature of the Rocky Flats neutron detector, which can also be applied to gamma ray detection in a criticality accident situation.

Table 1. Gamma Ray Sensitivity.

Detector ID	Number of Alarms (per minute)				
	100 mR/hr	650 mR/hr	1 R/hr	1 R/hr (Detector Reversed)	1R/hr (No LiF Disk)
NCD-0997	0 (0 counts)	2	5	4	4
NCD-0596	0 (30 counts)	17	47	47	44
NCD-0450	0 (12 counts)	33	93	85	83
NCD-0633	0 (19 counts)	39	101	86	90

REFERENCES

1). Annual Calibration of Model 85A and NCD-91 Neutron Criticality Detectors, 4-16000-RI-4301, Rocky Flats Plant (December 1993).
2). Calibration of DAF Criticality Accident Alarm System, LLNL-VIDEO-402771 (March 2009).

ALARM-TRAN-PB-SHIELD-001

APPENDIX H: ADDITIONAL DOCUMENTATION OF EXPERIMENTAL DETAILS

H.1 Collimator Box Stainless Steel Z2 CN 18-10 Analysis

220394 R1A 016

PS 30

OUTO KUMPU

34946

Certificate No. Zeugnis Nr. N° du certificat 357993/001 1

CERTIFICAT DE RECEPTION 3.1
EN 10204 3.1

Date Datum Date 02.05.07

Delivery address, Empfänger, Lieu de livraison
DESCALINOX SNC
PARC ACTIVITES LES CHENES
LES ECHETS
01700 MIRIBEL
FRANCE

DESCALINOX SNC
PARC ACTIVITES LES CHENES
LES ECHETS
01700 MIRIBEL
FRANCE

Requirements, Anforderungen, Exigences
EN 10028-7
ASTM A240/A240M -06
ASME 2004 SEC. II PART A SA-240 A05

Our Order No. Unser Auftrag Nr. Notre commande n° 13111

Your order, Ihre Bestellung, Votre commande 106591/00 OSFRA 24887

Product, Erzeugnisform, Produit: TOLE , ACIER INOXYDABLE

Mark of Manufacturer Zeichen des Lieferwerkes Signe de producteur: OUTO KUMPU

Process Einschmelzungsart Mode de fusion: AOD

Grade, Werkstoff, Nuance: 1.4307 TYPE 304L TYPE 304

Tolerances Toleranzen, Tolérances: EN ISO 9445 (EN10259)

Marking, Kennzeichnung, Marquage: 1.4307 2B

Marks, Versandzeichen, Marques: 106591/00 OSFRA 24887

Line Reihe Ligne	Item Position Poste	Charge-test No. Schmelze-Probe Nr. Coulée n°	Size, Abmessungen, Dimensions	Quantity Stückzahl Nombre	Weight, Gewicht, Poids	Finish Ausführung Fini
1	1	60356 1	1,0 X 1000 X 2000 MM	128	2036 KG	2B
2	5	60732 3	1,2 X 1250 X 2500 MM	102	3018 KG	2B
3	6	60372 6	1,2 X 1500 X 3000 MM	72	3088 KG	2B
4	9	60106 6	2,0 X 1000 X 2000 MM	484	15070 KG	2B

pieces total mass

Charge no. Schmelze Nr. Coulée n°	C %	Si %	Mn %	P %	S %	Cr %	Ni %	N %
60356	0,024	0,40	1,72	0,031	0,002	18,2	8,1	0,051
60732	0,023	0,39	1,62	0,032	0,002	18,2	8,1	0,048
60372	0,024	0,36	1,58	0,033	0,005	18,2	8,2	0,042
60106	0,020	0,40	1,63	0,031	0,002	18,3	8,1	0,049

Chemical composition, Chemische Zusammensetzung, Composition chimique

205332
AR.: 220394
POSTE: 32

Line Reihe Ligne	Location Ort Lieu	Rp0.2 N/mm²	Rp1.0 N/mm²	Rm N/mm²	A5 %	A50 %	%	Hardness Härte Dureté HB30
1	E	316	352	654	64	57		178
2	E	308	344	644	62	58		171
3	E	311	345	643	64	58		167
4	E	314	348	620	63	59		173

Mechanical properties, Mechanische Eigenschaften, Caractéristiques mecaniques

CERTIFIE SUIVANT LA DIRECTIVE APPARAILS PRESSION 97/23/CE PA TUEV CERT, CORPS DE CERTIFICATION POUR APPARAILS A PRESSION TUEV NORD SYSTEMS GM & CO. KG; CORPS NOTI ENREGISTREMENT NO. 0

Identity test, Verwechslungsprüfung, Contrôle d'identification: O.B.
Sizes, Abmessungen, Dimensions: O.B.
Surface, Oberfläche, Surface: O.B.
Test of intergran. corros, Prüfung auf interkrist. Korros, Test de corros. intercrist.
EN ISO 3651-2 A: CONFORME

A = Beginning / Anfang / Début
E = End / Ende / Fin

EN 10088-2/1.4307

We certify that the above mentioned products comply with the terms of the order contract.
Wir bestätigen, dass die Lieferung den Vereinbarungen der Bestellanmährung entspricht.
Nous certifions que les produits énumérés ci-dessus sont conformes aux prescriptions de la commande.

This test certificate is made by controlled ADP-system and is valid without signature.
Dieses Zeugnis wurde von einem überprüften Datenverarbeitungssystem erstellt und ist ohne Unterschrift gültig.
Ce certificat a été établi par un systeme informatique controlé et est valide sans signature.

Outokumpu Stainless Oy

Authorized inspector
Werksachverständiger RUKAJÄRVI JORM
Inspecteur autorisé

FIN-95400 Tornio, Finland

ALARM-TRAN-PB-SHIELD-001

H.2 PPB9 Analysis

1 356 PMDS

PLÂTRES POLYÉTHYLÈNES

cea

PLÂTRE POLYÉTHYLÈNE BORÉ (COMPOUND ROBATEL N°9)

1 - PRÉSENTATION

Le plâtre polyéthylène boré est un composé neutrophage réalisé par addition d'eau de gâchage et de granulés d'un matériau organique riche en hydrogène à un mélange de plâtre et d'un matériau boré (colémanite) de façon à obtenir une pâte coulable.

NOTA : Les caractéristiques du matériau sont données après la prise dans un caisson étanche ; à l'air libre, le matériau perd de l'eau libre par séchage.

2 - COMPOSITION CHIMIQUE

2.1 - Élémentaire

Elle est donnée dans le tableau suivant :

Éléments	% en masse	10^{30} atomes/m^3
Après la prise (sans séchage)		
Densité : 1.20		
H	8,52	$6,10.10^{-2}$
B	0,97	$6,47.10^{-4}$
Ca	9,82	$1,77.10^{-3}$
C	35,10	$2,11.10^{-2}$
O	37,64	$1,70.10^{-2}$
S	6,85	$1,54.10^{-3}$
Divers	1,11	
Après séchage*		
Densité : 1,03		
H	8,08	$5,01.10^{-2}$
B	1,13	$6,47.10^{-4}$
Ca	11,45	$1,77.10^{-3}$
C	40,92	$2,11.10^{-2}$
O	29,15	$1,13.10^{-2}$
S	7,98	$1,54.10^{-3}$
Divers	1,29	
Après échauffement à une température supérieure à 110°C**		
Densité : 0,96		
H	7,85	$4,49.10^{-2}$
B	1,21	$6,47.10^{-4}$
Ca	12,27	$1,77.10^{-3}$
C	43,87	$2,11.10^{-2}$
O	24,85	$8,98.10^{-3}$
S	8,56	$1,54.10^{-3}$
Divers	1,39	

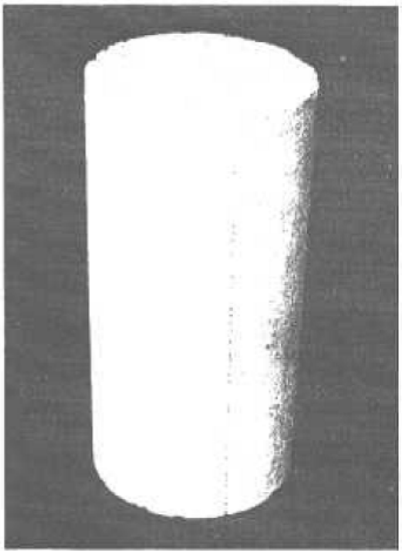

** Perte totale de l'eau libre*
*** Perte de 3/2 de H_2O à 110°C*

2.2 - Matériaux (pourcentage pondéral)

On donne ici la composition initiale (avant la prise).

- **Plâtre Polyéthylène boré**

Polyéthylène	: 41 (40 à 42)
Gypse ($2CaSO_4$, $3H_2O$)	: 36,77 (35 à 38)
Colémanite	: 8
Eau libre	: 14,23 (14 à 15)

- **Colémanite** ($2CaO$, $3B_2O_3$, $5H_2O$) théorique

En pourcentage pondéral (1) :

B_2O_3	:	39	MgO	:	4,5
CaO	:	22	Al_2O_3	:	4,5
SiO_2	:	8	SrO	:	2
H_2O	:	18	K_2O	:	0,1
			Divers	:	2

Soit une concentration minimale en bore de 12 %.

H.3 Magnetite Concrete Analysis

Laboratoire d'Etudes et de Recherches sur les Matériaux

Procès verbal d'essais.8952/1242.LC

CARACTERISATION CHIMIQUE D'UN BETON DE MAGNETITE

Laboratoire d'essai	Demandeur d'essai
LERM 23, rue de la Madeleine BP 60136 - 13631 ARLES CEDEX	**CEA SACLAY** Direction de l'énergie Nucléaire Centre de Saclay 91191 GIF SUR YVETTE CEDEX
Section Microstructure et Chimie	Madame MASSE
Dossier n° 06.09.8952 **Devis n°** DV 9369/BCM54	**Réf.** : Bon de commande n° 4000266753 / P5B63 du 19.12.2006
	Objet : Caractérisation chimique d'un béton

Siège social et laboratoires
23, rue de la Madeleine
BP 60136-13631 Arles cedex
Tél. : 04 90 18 30 30
Fax : 04 90 96 25 27
E-mail : Contact@lerm.fr

WWW.lerm.fr

Agence Ile de France
19, passage Charles Dallery
75011 PARIS
Tél. : 01 43 56 02 04
Fax : 01 43 56 05 09

Echantillon

Nature : Béton de magnétite
Prélevé le : non communiqué
Date de réception : le 19 janvier 2007
Etat à la réception : correct

Transmis par : Ets SOUTRENON

Ref. LERM	Ref. CEA SACLAY
8952-5	Béton de Magnétite

La reproduction de ce procès verbal d'essai n'est autorisée que sous sa forme intégrale. Il comporte deux pages (recto verso).

Certifié ISO 9001 par l'AFAQ

S.A. à Directoire et Conseil de surveillance au capital de 187 020 €- 344 297 775 RCS Arles - APE 742C

Page 1/2

lerm

METHODES D'ESSAIS

Conformément à la demande, les essais ont été effectués conformément aux textes de référence suivants :

- Dosage de bore par spectrométrie d'émission à plasma après fusion au carbonate de sodium selon l'instruction LERM IS/LC/E/57 ;
- dosage de 10 éléments (Si, Al, Fe, Ca, Mg, Ti, Mn, Cr, Sr, P) par spectrométrie d'émission à plasma après fusion au métaborate de lithium et reprise chlorhydrique selon l'instruction LERM IS/LC/E/08;
- dosage des alcalins par spectrométrie d'émission de flamme après fusion au métaborate de lithium selon l'instruction LERM IS/LC/E/08;
- analyse thermogravimétrique selon l'instruction LERM IS/LC/E/65 ;
- dosage des chlorures par potentiométrie selon l'instruction LERM IS/LC/E/25 ;
- dosage du carbone et de l'hydrogène sur appareil CHN Chromatographique par mesure de conductibilité thermique.

RESULTATS

Les résultats obtenus, exprimés en pourcentage massique, sont regroupés dans le tableau suivant.

Caractéristique mesurée	Valeur (% massique)
Si	2,72
Al	0,52
Fe	54,94
Ca	5,79
Mg	0,56
Ti	0,17
Mn	0,18
P	0,45
Cr	0,03
Sr	0,02
Na	0,22
K	0,28
Cl^-	< 0,01
C	0,36
B	< 0,1
H	0,32
Teneur en eau attribuable aux hydrates du liant	1,9

Observations :

Essais réalisés au LERM février 2007

Arles, le 2 mars 2007

Le responsable des essais — **C. NGWE MOWENI**

Le responsable de la section Microstructure et Chimie — **D. ROSSINI**

L'essai faisant l'objet du présent procès verbal d'essais portent sur un (des) echantillon(s) prélevé(s) dans certaines conditions. Sa représentativité est liée à celle (des) de l'echantillon(s) et ne peut être étendue à la population dont il(s) est (sont) issu(s) que si l'homogénéite de cette population peut être vérifiée. La reproduction de ce procès verbal d'essais n'est autorisée que sous sa forme intégrale.

Procès verbal d'essais.8952/1242.LC — Page 2/2

ALARM-TRAN-PB-SHIELD-001

ETS SOUTRENON
PREFABRIQUES BETON
Z.A. Les Beluzes
42720 Pouilly Sous Charlieu
Tél. 04 77 69 30 29
Fax 04 77 69 30 25

SOUTRENON
ELEMENTS PREFABRIQUES EN BETON

FORMULATION

BETON MAGNETITE

	Quantité par m^3 de béton
Gravillon magnétite 0/8 mm :	1.180 kg
Gravillon magnétite 0/20 mm :	2.360 kg
Ciment PM/ES 52,5 :	355 kg
Adjuvant Advaflow 345 :	5 litres
Eau totale :	160 kg

Densité sur éprouvette témoin : 3,90

H.4 Standard Concrete Analysis

Laboratoire d'Etudes et de Recherches sur les Matériaux

Procès verbal d'essais.8952/1239.LC

CARACTERISATION CHIMIQUE D'UN BETON

Laboratoire d'essai	Demandeur d'essai
LERM 23, rue de la Madeleine BP 60136 - 13631 ARLES CEDEX	**CEA SACLAY** Direction de l'énergie Nucléaire Centre de Saclay 91191 GIF SUR YVETTE CEDEX
Section Microstructure et Chimie	Madame MASSE
Dossier n° 06.09.8952 **Devis n°** DV 9369/BCM54	**Réf.** : Bon de commande n° 4000266753 / P5B63 du 19.12.2006
	Objet : Caractérisation chimique d'un béton

Siège social et laboratoires
23, rue de la Madeleine
BP 60136-13631 Arles cedex
Tél. : 04 90 18 30 30
Fax : 04 90 96 25 27
E-mail : Contact@lerm.fr

WWW.lerm.fr

Agence Ile de France
19, passage Charles Dallery
75011 PARIS
Tél. : 01 43 56 02 04
Fax : 01 43 56 05 09

Echantillon

Nature : Béton
Prélevé le : non communiqué
Date de réception :le 19 janvier 2007
Etat à la réception : correct

Transmis par : Ets SOUTRENON

Réf. LERM	Réf. CEA SACLAY
8952-2	Béton Traditionnel Avec adjuvant

La reproduction de ce procès verbal d'essai n'est autorisée que sous sa forme intégrale. Il comporte deux pages (recto verso).

Certifié ISO 9001 par l'AFAQ

S.A. à Directoire et Conseil de surveillance au capital de 187 020 €- 344 297 775 RCS Arles - APE 742C

lerm

METHODES D'ESSAIS

Conformément à la demande, les essais ont été effectués conformément aux textes de référence suivants :

- Dosage de bore par spectrométrie d'émission à plasma après fusion au carbonate de sodium selon l'instruction LERM IS/LC/E/57 ;
- dosage de 10 éléments (Si, Al, Fe, Ca, Mg, Ti, Mn, Cr, Sr, P) par spectrométrie d'émission à plasma après fusion au métaborate de lithium et reprise chlorhydrique selon l'instruction LERM IS/LC/E/08;
- dosage des alcalins par spectrométrie d'émission de flamme après fusion au métaborate de lithium selon l'instruction LERM IS/LC/E/08;
- analyse thermogravimétrique selon l'instruction LERM IS/LC/E/65 ;
- dosage des chlorures par potentiométrie selon l'instruction LERM IS/LC/E/25 ;
- dosage du carbone et de l'hydrogène sur appareil CHN Chromatographique par mesure de conductibilité thermique.

RESULTATS

Les résultats obtenus, exprimés en pourcentage massique, sont regroupés dans le tableau suivant.

Caractéristique mesurée	Valeur (% massique)
Si	27,02
Al	6,04
Fe	1,99
Ca	8,67
Mg	0,75
Ti	0,23
Mn	0,04
P	0,10
Cr	0,01
Sr	0,03
Na	1,57
K	3,32
Cl^-	< 0,01
C	0,62
B	< 0,1
H	0,64
Teneur en eau attribuable aux hydrates du liant	5,0

Observations :

Essais réalisés au LERM en février 2007

Arles, le 2 mars 2007

Le responsable des essais — **Le responsable de la section Microstructure et Chimie**

C. NGWE MOWENI — **D. ROSSINI**

L'essai faisant l'objet du présent procès verbal d'essais portent sur un (des) échantillon(s) prélevé(s) dans certaines conditions. Sa représentativité est liée à celle (des) de l'échantillon(s) et ne peut être étendue à la population dont il(s) est (sont) issu(s) que si l'homogénéité de cette population peut être vérifiée. La reproduction de ce procès verbal d'essais n'est autorisée que sous sa forme intégrale.

Procès verbal d'essais.8952/1239.LC — Page 2/2

ALARM-TRAN-PB-SHIELD-001

ETS SOUTRENON
PREFABRIQUES BETON
Z.A. Les Beluzes
42720 Pouilly Sous Charlieu
Tél. 04 77 69 30 29
Fax 04 77 69 30 25

SOUTRENON
ELEMENTS PREFABRIQUES EN BETON

FORMULATION

BETON TRADITIONNEL

Quantité par m^3 de béton

Sable 0/4 mm :	861 kg
Gravillon 4/10 mm :	306 kg
Gravillon 10/20 mm :	645 kg
Ciment PM/ES 52,5 :	355 kg
Adjuvant Advaflow 345 :	2,5 litres
Eau totale :	190 kg

Densité sur éprouvette témoin : 2,30

H.5 Uranyl Nitrate Enrichment Analysis

DTMN/SAD/LCA
Bt 118

ANALYSE ISOTOPIQUE DE L'URANIUM PAR SMTI

Client : Mr J. LEGENDRE - SRSC/Bt 010
Nom de l'échantillon : R103

URANIUM
Unité des résultats : Atomes %

^{234}U : 0,5891 +/- 0,0010
^{235}U : 92,6857 +/- 0,0200
^{236}U : 0,2519 +/- 0,0010
^{238}U : 6,4733 +/- 0,0050

H. Chollet / le 17/06/1999
Vu et transmis

Pourcentage en molaire :

^{235}U : 92,6185 %

ALARM-TRAN-PB-SHIELD-001

H.6 Uranyl Nitrate Concentration, Density, and Molarity Analysis

VA / DRMN / SRNC / LM2SI **1-687** mardi 18 janv 2011

ANALYSE URANIUM

Description de l'échantillon

Numéro échantillon	Motif Analyse	Date Prélèvement	Date Analyse
1-687	vérification	06/09/2010	08/09/2010

Gravimétrie (Extrait sec)

Constantes *Masses Molaires* M_{U3O8} = *833,705 g / mole* $3M_U$ = *705,705 g / mole*

Creuset n°	Masse Creuset Vide (g)	Masse Creuset + U_3O_8 (g)	Masse U_3O_8 (g)	Masse U (g)	Masse Flacon C.G. plein (g)	Masse Flacon C.G. - P.E. (g)	Prise d'Essai (g)	Concentration massique en U_{total} (g / kg)	Volume (mL)	Concentration volumique en U_{total} (g / L)	
n°11	29,1973	29,4682	0,2709	0,2293	34,9862	31,2227	3,7635	60,9295	52,70	70,45	
n°12	29,0133	29,2442	0,2309	0,1954	31,2227	28,0097	3,2130	60,8309	52,61	70,34	
n°16	31,7850	32,0344	0,2494	0,2111	28,0097	24,5376	3,4721	60,8016	52,59	70,30	

Concentration Vol. Moyenne	[Utotal]moy en g / L	70,36 g/L	Incertitude méthode M. NEUILLY	S[Utotal]moy en g / L	± 0,05 g/L

Densimétrie à 20℃

Mesure 1 ρ_1 (g / cm^3)	Mesure 2 ρ_2 (g / cm^3)	Mesure 3 ρ_3 (g / cm^3)	Mesure 4 ρ_4 (g / cm^3)	Densité Moyenne ρ_{moy} en g / cm^3	Incertitude méthode M. NEUILLY $S\ \rho_{moy}$ en g / cm^3
1,15615	1,15626	1,15628	1,15627	1,15624 g/cm^3	± 0,00003 g/cm^3

Acidité

Bécher n°	Masse Flacon C.G. plein (g)	Masse Flacon C.G. - P.E. (g)	Prise d'Essai (g)	Volume (mL)	Volume NaOH (mL)	Molarité en NO_3^- (moles / L)	Molarité en H^+ (moles / L)
n°1	24,5355	23,8087	0,7268	0,6286	1,59	2,53	1,93
n°2	23,8087	22,7931	1,0156	0,8784	2,18	2,48	1,88

Molarité Moyenne en NO_3^-	[NO3-]moy en mol / L	2,51 moles/L	Incertitude méthode M. NEUILLY	S[NO3-]moy en mol / L	± 0,03 moles/L
Molarité Moyenne en H^+	[H+]moy en mol / L	1,91 moles/L	Incertitude méthode M. NEUILLY	S[H+]moy en mol / L	± 0,03 moles/L

Validité de l'analyse

Test Empirique :	1,157	Test :
ρmoy	1,156	OK

H.7 Calibration and Operation Characteristics of SILENE

Caractéristique		Configuration Sans écran	Configuration Ecran Acier	Configuration Ecran Plomb	Configuration Ecran CH_2
Du cœur	Concentration de la solution d'acidité 2N, en U total Température d'Ebul. Hauteur Critique Réactivité du mm de solution Temps de vie des neutrons prompts Valeur de, βeff Coefficient de température	71 ± 1g L^{-1} 104 °C 37,77 ± 0.56 cm 50 pcm mm^{-1} 36 µs 794 pcm -51 pcm $°C^{-1}$	71 ± 1g L^{-1} 104 °C 32,5 ± 0,5 cm 72 pcm mm^{-1} 35 µs 792 pcm -40 pcm $°C^{-1}$	71 ± 1g 1^{-1} 104 °C 31,44 ± 0.27 cm 81 pcm mm^{-1} 37 µs 783 pcm -42 pcm $°C^{-1}$	71 ± 1g L^{-1} 104 °C 34,56 ± 0.3 cm 60 pcm mm^{-1} 35 µs 788 pcm -44pcm $°C^{-1}$
Des barres de contrôle	Antiréactivité barre B4C Antiréactivité barre Cd à vis	4560 pcm 3220 pcm	4080 pcm 2880 pcm	4040 pcm 2820 pcm	4550 pcm 3230 pcm
Des modes de fonctionnement	<u>Salve</u> *(sans source externe)* Vitesse d'introduction de réactivité Cd rapide Réactivité potentielle ΔKp Energie intégrée sous le 1er pic Energie intégrée si évolution Puissance maximum Temps de doublement Onde de pression <u>Libre évolution</u> *(avec source externe)* Vitesse d'introduction de réactivité b4C Cd à vis Réactivité potentielle ΔKp Energie intégrée	~ 2,00 ms^{-1} ≤ 2370 pcm ≤ $1,65.10^{17}$ fis < 3.10^{17} fis ≤ $2,9.10^{19}$ $fis.s^{-1}$ ≥ $1,6.10^{-3}$ s ≤ 8 bars ~ 1 $cm.s^{-1}$ ~ 1 $cm.s^{-1}$ ≤ 4200 pcm < 5.10^{17} fis	~ 2,00 ms^{-1} ≤ 2570 pcm ≤ $1,65.10^{17}$ fis < $3,1.10^{17}$ fis ≤ $3,5.10^{19}$ $fis.s^{-1}$ ≥ $1,5.10^{-3}$ s ≤ 8 bars ~ 1 $cm.s^{-1}$ ~ 1 $cm.s^{-1}$ ≤ 3120 pcm < $4,1.10^{17}$ fis	~ 2,00 ms^{-1} ≤ 2780 pcm ≤ $1,65.10^{17}$ fis < $3,6.10^{17}$ fis ≤ $3,55.10^{19}$ $fis.s^{-1}$ ≥ $1,3.10^{-3}$ s ≤ 8 bars ~ 1 $cm.s^{-1}$ ~ 1 $cm.s^{-1}$ ≤ 3300 pcm < 4.10^{17} fis	~ 2,00 ms^{-1} ≤ 2480 pcm ≤ $1,9.10^{17}$ fis < $3,8.10^{17}$ fis ≤ $3,6.10^{19}$ $fis.s^{-1}$ ≥ $1,4.10^{-3}$ s ≤ 8 bars ~ 1 $cm.s^{-1}$ ~ 1 $cm.s^{-1}$ ≤ 3500 pcm < 5.10^{17} fis
	<u>Palier</u> : *(avec source externe)* Vitesse d'introduction de réactivité B4C Cd à vis Réactivité potentielle ΔKp Puissance Energie intégrée	~ 1 mm s^{-1} ~ 1 mm s^{-1} ≤ 4200 pcm ≤ 10 Kw < 5.10^{17} fis	~ 1 mm s^{-1} ~ 1 mm s^{-1} ≤ 3120 pcm ≤ 10 Kw ≤ $4,1.10^{17}$ fis	~ 1 mm s^{-1} ~ 1 mm s^{-1} ≤ 3300 pcm ≤ 10 Kw < 4.10^{17} fis	~ 1 mm s^{-1} ~ 1 mm s^{-1} ≤ 3380 pcm ≤ 10 Kw ≤ 5.10^{17} fis
Thermique	Relation échauffement fission	$1,35.10^{11}$ $fis.cal^{-1}$	$1,42.10^{11}$ $fis.cal^{-1}$	$1,43.10^{11}$ $fis.cal^{-1}$	$1,69.10^{11}$ $fis.cal^{-1}$
Sécurité	Energie intégrée (CAF) Puissance pendant montée solution	5.10^{17} fis 10 watts	410^{17} fis 13 watts	4.10^{17} fis 13 watts	5.10^{17} fis 60 watts

ALARM-TRAN-PB-SHIELD-001

APPENDIX I: UNCERTAINTY ANALYSIS DETAILS

The tables in this appendix provide the details of the sensitivity / uncertainty analysis. The tables include the parameters being evaluated (including units), each parameter's uncertainty (σ_i), the absolute sensitivity of the detector response to that parameter (S_i^d), and the detector response uncertainty due to each parameter's uncertainty (σ_i^d). The total experimental uncertainty for each detector (σ_{tot}^d) is the sum in quadrature of the uncertainty due to the individual parameters, so all the parameters are assumed to be uncorrelated.

The units of the neutron measurements are Bq/g and for the TLD doses are Gy, which are also the units of the detector response uncertainties (σ_i^d and σ_{tot}^d). The units of the absolute sensitivities (S_i^d) in the following tables are Bq/g or Gy, depending on the type of measurement, per the units of the parameter being evaluated (σ_i). For example, the absolute sensitivity of the TLD dose to the solution height in SILENE has units of Gy/cm.

Discussion of the derivation of the individual parameter uncertainties is in Sect. 2.0. The equations given in Sect. 2.0 to calculate the data in the following tables are repeated here for the convenience of the reader. It is very important to note that the sensitivity values given in the following tables are absolute, not relative. These absolute sensitives are simply the derivative of the detector response with respect to the given parameter.

$$S_i^d = \frac{\Delta d}{\Delta x_i} \qquad \sigma_i^d = S_i^d * \sigma_i \qquad \sigma_{tot}^d = \sqrt{\sum_i \left(\sigma_i^d\right)^2}$$

One must pay close attention to the value of the measured response (Table 1-26 and Table 1-27) and the individual parameter uncertainty in order to make a judgement about the magnitude of each absolute sensitivity. For example, if an absolute sensitivity for a parameter is 1.0e6 and the measured value is 1.0e8, then this parameter likely will not make a large contribution to the total experimental uncertainty. However, that is dependent on the individual parameter uncertainty. For another example, assume the absolute sensitivity to a parameter is 1.0e8 and the measured value is 1.0e6. If this individual parameter has an uncertainty of 1.0e-4, this parameter likely will not make a large contribution to the total experimental uncertainty even though the sensitivity is larger than the measured value.

The uncertainty of the absolute sensitivity values in the following tables are relative uncertainties between 0 and 1. For many of the parameters analyzed, the reported absolute sensitivity relative uncertainty is >0.50. In other words, the absolute sensitivity relative uncertainty is greater than 50%. This indicates a parameter that was perturbed, but the Monte Carlo results of the original case and the perturbations are not statistically different with all Monte Carlo uncertainties less than 1 percent. While it is possible to reduce the Monte Carlo uncertainties of these simulations, this has not been pursued because the resulting absolute sensitivity and contribution to the total experimental uncertainty would likely be negligible.

Below are two examples that illustrate how the absolute sensitivities in the following tables were calculated. In most instances the nominal value of the parameter in the benchmark model being evaluated was perturbed plus and minus some percentage of the nominal value. Then the simulated response was calculated with the perturbed parameter values. Next, a line was fit to the simulated response data points as a function of the parameter being evaluated via a linear least squares algorithm. The slope of this line and its uncertainty were taken as the absolute sensitivity and the uncertainty of the sensitivity. If the results of the simulations with the perturbed values are statistically the same as the simulation with the nominal value, i.e., the difference is

statistically indistinguishable from zero, then the uncertainty contribution of that parameter to the total experimental uncertainty is assumed to be negligible.

The first example evaluates the absolute sensitivity of the cobalt activity to the density of the stainless steel used to construct the SILENE critical assembly. One can see in Table I-1 that the simulated response for each perturbation is statistically different from the nominal case. In Fig. I-1 one can see that the absolute sensitivity for this example is -1.0044. Note, this example is just an illustration and does not apply exactly to this benchmark.

Table I-1. Results of Steel Density Perturbation Simulations

Steel Density (g/cm^3)	Response (Bq/g)	Relative Uncertainty	Response Delta	Response Delta Uncertainty
7.505	74.8805	0.0012		
7.9	74.4776	0.0012	0.4029	0.1267
8.295	74.087	0.0012	0.3906	0.1261

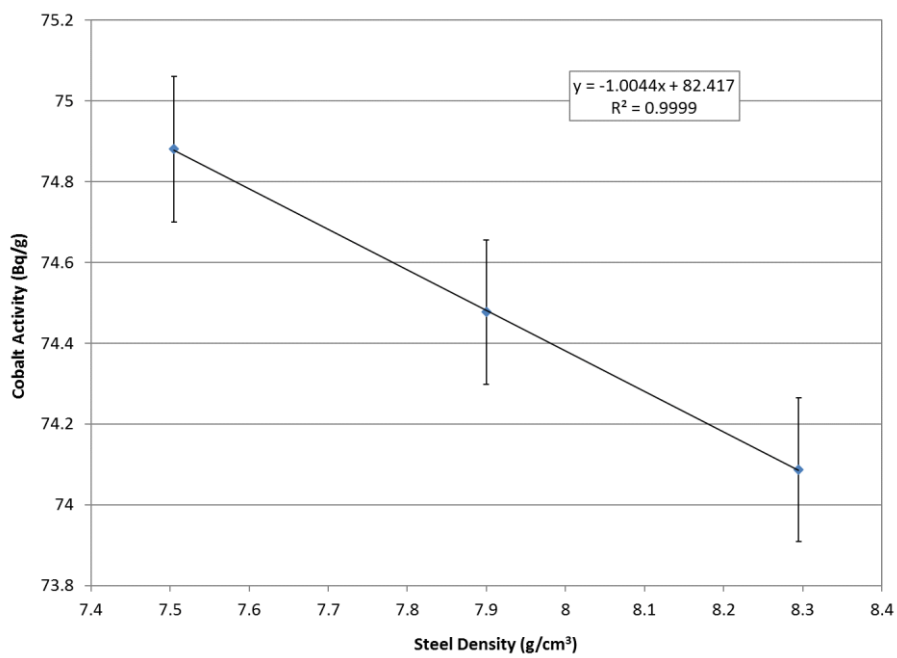

Fig. I-1. Cobalt Activity vs. SILENE Reactor Steel Density (2-sigma error bars).

The second example evaluates the absolute sensitivity of the cobalt activity to the chromium weight fraction (wf) of the stainless steel used to construct the SILENE critical assembly. One can see in Table I-2 that the simulated response for each perturbation is *not* statistically different from the nominal case. This is also illustrated by comparing the differences in the calculated responses (response delta, which is the difference between the nominal response and the perturbed response) and the related uncertainties. The response delta uncertainties are actually larger than the response deltas. In Fig. I-2 one can see that the absolute sensitivity for this example is -2.355, but this sensitivity is considered negligible because the perturbations did not produce statistically different results. Note, this example is just an illustration and does not apply exactly to this benchmark.

ALARM-TRAN-PB-SHIELD-001

Table I-2. Results of Steel Cr Weight Fraction Perturbation Simulations

Steel Density (g/cm^3)	Response (Bq/g)	Relative Uncertainty	Response Delta	Response Delta Uncertainty
0.17	74.4684	0.0012		
0.18	74.4776	0.0012	-0.0092	0.1264
0.19	74.4213	0.0012	0.0563	0.1263

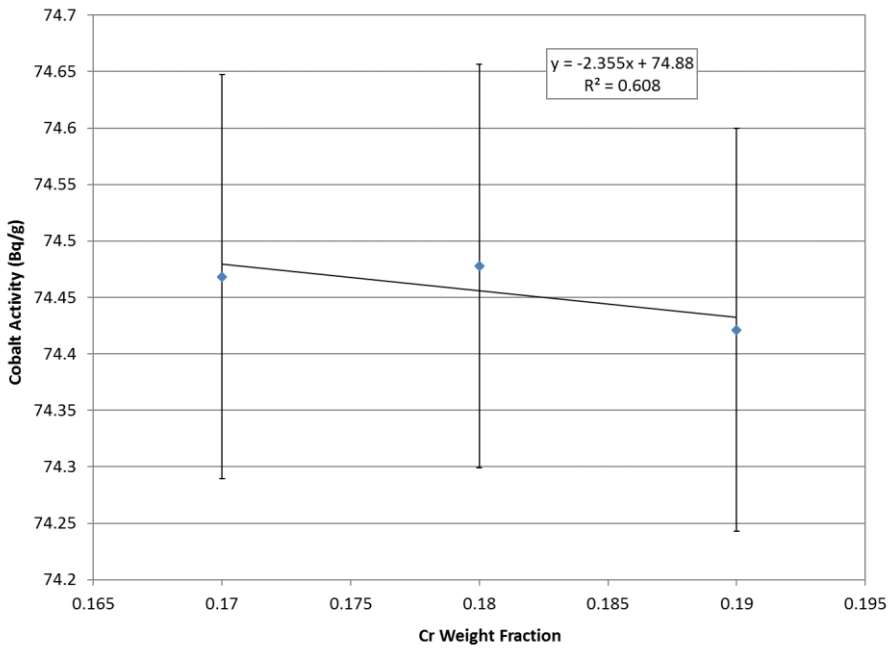

Fig. I-2. Cobalt Activity vs. Cr Weight Fraction of SILENE Reactor Steel (2-sigma error bars).

ALARM-TRAN-PB-SHIELD-001

I.1 Case 1 Collimator A Uncertainties

Table I-3. Case 1 collimator A $^{59}Co(n,\gamma)^{60}Co$ experimental uncertainties

Uncertainty source	Uncertainty value (σ_i)	Sensitivity (S_i^d)		σ_i^d
		Value	Unc	
Measurement uncertainty	2.135%			1.300E+00
Number of fissions	6.000%			3.654E+00
SILENE room concrete density (g/cm^3)	2.000E-01	4.974E-01	>0.50	negligible
SILENE room concrete H content (wf)	1.050E-04	2.758E+02	>0.50	negligible
SILENE room concrete B content (wf)	5.450E-07	-3.727E+05	0.3055	-2.031E-01
SILENE assembly wall thickness (cm)	2.887E-02	-1.850E+01	0.0427	-5.340E-01
SILENE assembly wall density (g/cm^3)	4.500E-01	-1.506E+00	0.1062	-6.777E-01
SILENE assembly wall Cr content (wf)	5.774E-03	-2.356E+00	>0.50	negligible
SILENE assembly wall Ni content (wf)	5.774E-03	-9.131E+00	>0.50	negligible
Critical height (cm)	5.000E-04	-1.031E+00	0.0095	-5.154E-04
Solution concentration (g/L)	5.000E-02	-8.483E-01	0.2483	-4.241E-02
Solution density (g/cm^3)	5.456E-03	-4.295E+01	0.1307	-2.343E-01
Solution uranium enrichment (wf)	1.500E-05	-1.774E-01	0.0769	-2.660E-06
Solution temperature (deg C)	1.260E+01	-1.525E-02	>0.50	negligible
Collimator A inner stainless steel thickness (cm)	2.887E-02	6.576E+00	0.2397	1.898E-01
Collimator A inner stainless steel density (g/cm^3)	3.900E-01	-1.062E-01	>0.50	negligible
Collimator A inner stainless steel Cr content (wf)	5.774E-03	1.541E+00	>0.50	negligible
Collimator A inner stainless steel Ni content (wf)	5.774E-03	2.585E+00	>0.50	negligible
Collimator A copper thickness (cm)	2.887E-02	-1.204E+01	0.0546	-3.474E-01
Collimator A copper density (g/cm^3)	4.600E-01	-6.431E-01	0.2203	-2.958E-01
Collimator A lead thickness (cm)	2.887E-02	1.548E+00	0.2041	4.469E-02
Collimator A lead density (g/cm^3)	1.720E-01	2.579E-01	0.4317	4.436E-02
Collimator A PPB9 density (g/cm^3)	6.282E-02	9.940E+00	0.0520	6.244E-01
Collimator A PPB9 H content (wf)	1.744E-03	8.547E+01	0.1985	1.491E-01
Collimator A PPB9 B content (wf)	6.158E-04	-9.949E+02	0.1134	-6.127E-01
Collimator A X position in room (cm)	1.000E+00	-5.066E-01	0.0249	-5.066E-01
Collimator A Y position in room (cm)	1.000E+00	8.625E-01	>0.50	negligible
Collimator A Z position in room (cm)	1.000E+00	-1.104E-01	0.1260	-1.104E-01
Collimator A foil holder base thickness (cm)	2.887E-02	-3.199E-01	>0.50	negligible
Collimator A foil holder base density (g/cm^3)	3.425E-01	1.641E-02	>0.50	negligible
Collimator A foil holder base Mg content (wf)	2.887E-03	-2.823E+00	>0.50	negligible
Collimator A foil holder back plate thickness (cm)	2.887E-02	2.075E+00	>0.50	negligible
Collimator A foil holder back plate density (g/cm^3)	3.425E-01	2.794E-02	>0.50	negligible
Collimator A foil holder back plate Mg content (wf)	2.887E-03	-1.500E+00	>0.50	negligible
Collimator A foil holder cover thickness (cm)	2.887E-02	-3.595E+00	>0.50	negligible
Collimator A foil holder cover density (g/cm^3)	3.425E-01	-6.892E-02	>0.50	negligible
Collimator A foil holder cover Mg content (wf)	2.887E-03	-2.331E+00	>0.50	negligible
Collimator A Co foil thickness (cm)	1.155E-02	-9.763E+01	0.0324	-1.127E+00
Collimator A Co foil radius (cm)	1.443E-02	-4.264E+00	>0.50	negligible
Collimator A Co foil mass (g)	1.161E-02	-2.324E+00	0.0589	-2.699E-02
Lead shield thickness (cm)	2.887E-02	-1.573E+00	0.0209	-4.542E-02
Lead shield density (g/cm^3)	4.500E-02	-1.352E+00	0.0872	-6.086E-02
Lead shield Ni content (wf)	7.550E-07	-6.730E+03	>0.50	negligible
Lead shield Fe content (wf)	2.850E-07	-7.092E+03	>0.50	negligible
Lead shield Cr content (wf)	1.625E-08	4.340E+04	>0.50	negligible
Lead shield Bi content (wf)	2.050E-04	4.890E+00	>0.50	negligible
Lead shield Al content (wf)	8.000E-08	-1.525E+04	>0.50	negligible
Lead shield Ag content (wf)	1.500E-05	-2.181E+02	>0.50	negligible
Total experimental uncertainty absolute (σ_{tot}^d)				4.297E+00
Total experimental uncertainty relative				0.0706

ALARM-TRAN-PB-SHIELD-001

Table I-4. Case 1 collimator A $^{197}Au(n,\gamma)^{198}Au$ experimental uncertainties

Uncertainty source	Uncertainty value (σ_i)	Sensitivity (S_i^d)		σ_i^d
		Value	Unc	
Measurement uncertainty	1.526%			1.050E+03
Number of fissions	6.000%			4.128E+03
SILENE room concrete density (g/cm^3)	2.000E-01	2.052E+02	>0.50	negligible
SILENE room concrete H content (wf)	1.050E-04	1.722E+05	>0.50	negligible
SILENE room concrete B content (wf)	5.450E-07	-1.961E+08	>0.50	negligible
SILENE assembly wall thickness (cm)	2.887E-02	-1.907E+04	0.0599	-5.505E+02
SILENE assembly wall density (g/cm^3)	4.500E-01	-1.817E+03	0.1272	-8.175E+02
SILENE assembly wall Cr content (wf)	5.774E-03	-5.078E+03	>0.50	negligible
SILENE assembly wall Ni content (wf)	5.774E-03	-5.848E+03	>0.50	negligible
Critical height (cm)	5.000E-04	-1.255E+03	0.0113	-6.273E-01
Solution concentration (g/L)	5.000E-02	-5.559E+02	>0.50	negligible
Solution density (g/cm^3)	5.456E-03	-3.989E+04	0.2030	-2.176E+02
Solution uranium enrichment (wf)	1.500E-05	-1.373E+02	0.1439	-2.060E-03
Solution temperature (deg C)	1.260E+01	3.433E+01	>0.50	negligible
Collimator A inner stainless steel thickness (cm)	2.887E-02	1.001E+04	0.2277	2.889E+02
Collimator A inner stainless steel density (g/cm^3)	3.900E-01	-3.502E+01	>0.50	negligible
Collimator A inner stainless steel Cr content (wf)	5.774E-03	-6.266E+03	>0.50	negligible
Collimator A inner stainless steel Ni content (wf)	5.774E-03	1.523E+04	>0.50	negligible
Collimator A copper thickness (cm)	2.887E-02	-1.015E+04	0.0902	-2.930E+02
Collimator A copper density (g/cm^3)	4.600E-01	-5.042E+02	0.4201	-2.319E+02
Collimator A lead thickness (cm)	2.887E-02	1.139E+03	0.4013	3.289E+01
Collimator A lead density (g/cm^3)	1.720E-01	1.364E+02	>0.50	negligible
Collimator A PPB9 density (g/cm^3)	6.282E-02	7.211E+03	0.1035	4.529E+02
Collimator A PPB9 H content (wf)	1.744E-03	6.477E+04	0.3792	1.130E+02
Collimator A PPB9 B content (wf)	6.158E-04	-7.948E+05	0.2049	-4.894E+02
Collimator A X position in room (cm)	1.000E+00	-5.913E+02	0.0303	-5.913E+02
Collimator A Y position in room (cm)	1.000E+00	7.295E+02	>0.50	negligible
Collimator A Z position in room (cm)	1.000E+00	-1.259E+02	0.1938	-1.259E+02
Collimator A foil holder base thickness (cm)	2.887E-02	-1.635E+03	>0.50	negligible
Collimator A foil holder base density (g/cm^3)	3.425E-01	-2.888E+02	>0.50	negligible
Collimator A foil holder base Mg content (wf)	2.887E-03	3.399E+02	>0.50	negligible
Collimator A foil holder back plate thickness (cm)	2.887E-02	-8.397E+02	>0.50	negligible
Collimator A foil holder back plate density (g/cm^3)	3.425E-01	-7.708E+01	>0.50	negligible
Collimator A foil holder back plate Mg content (wf)	2.887E-03	2.429E+03	>0.50	negligible
Collimator A foil holder cover thickness (cm)	2.887E-02	7.201E+01	>0.50	negligible
Collimator A foil holder cover density (g/cm^3)	3.425E-01	1.947E+02	>0.50	negligible
Collimator A foil holder cover Mg content (wf)	2.887E-03	3.528E+03	>0.50	negligible
Collimator A Au foil thickness (cm)	1.443E-03	-9.166E+05	0.0414	-1.323E+03
Collimator A Au foil radius (cm)	5.774E-03	4.071E+03	>0.50	negligible
Collimator A Au foil mass (g)	3.092E-03	-1.196E+03	0.0803	-3.699E+00
Lead shield thickness (cm)	2.887E-02	-1.666E+03	0.0284	-4.808E+01
Lead shield density (g/cm^3)	4.500E-02	-1.472E+03	0.1113	-6.622E+01
Lead shield Ni content (wf)	7.550E-07	2.449E+05	>0.50	negligible
Lead shield Fe content (wf)	2.850E-07	1.357E+07	>0.50	negligible
Lead shield Cr content (wf)	1.625E-08	-1.359E+08	>0.50	negligible
Lead shield Bi content (wf)	2.050E-04	-1.004E+04	>0.50	negligible
Lead shield Al content (wf)	8.000E-08	-2.775E+07	>0.50	negligible
Lead shield Ag content (wf)	1.500E-05	-4.033E+05	>0.50	negligible
Total experimental uncertainty absolute (σ_{tot}^d)				4.687E+03
Total experimental uncertainty relative				0.0681

ALARM-TRAN-PB-SHIELD-001

Table I-5. Case 1 collimator A $^{115}In(n,\gamma)^{116}In$ experimental uncertainties

Uncertainty source	Uncertainty value (σ_i)	Sensitivity (S_i^d)		σ_i^d
		Value	Unc	
Measurement uncertainty	2.075%			1.650E+05
Number of fissions	6.000%			4.770E+05
SILENE room concrete density (g/cm^3)	2.000E-01	-3.344E+04	>0.50	negligible
SILENE room concrete H content (wf)	1.050E-04	3.626E+07	>0.50	negligible
SILENE room concrete B content (wf)	5.450E-07	-1.476E+10	>0.50	negligible
SILENE assembly wall thickness (cm)	2.887E-02	-2.285E+06	0.0496	-6.597E+04
SILENE assembly wall density (g/cm^3)	4.500E-01	-2.511E+05	0.0914	-1.130E+05
SILENE assembly wall Cr content (wf)	5.774E-03	-1.001E+05	>0.50	negligible
SILENE assembly wall Ni content (wf)	5.774E-03	-4.454E+05	>0.50	negligible
Critical height (cm)	5.000E-04	-1.389E+05	0.0101	-6.946E+01
Solution concentration (g/L)	5.000E-02	-5.957E+04	>0.50	negligible
Solution density (g/cm^3)	5.456E-03	-4.888E+06	0.1715	-2.666E+04
Solution uranium enrichment (wf)	1.500E-05	-1.593E+04	0.1229	-2.390E-01
Solution temperature (deg C)	1.260E+01	4.886E+03	>0.50	negligible
Collimator A inner stainless steel thickness (cm)	2.887E-02	9.401E+05	0.2508	2.714E+04
Collimator A inner stainless steel density (g/cm^3)	3.900E-01	-2.683E+04	>0.50	negligible
Collimator A inner stainless steel Cr content (wf)	5.774E-03	6.507E+05	>0.50	negligible
Collimator A inner stainless steel Ni content (wf)	5.774E-03	1.421E+06	>0.50	negligible
Collimator A copper thickness (cm)	2.887E-02	-1.518E+06	0.0599	-4.383E+04
Collimator A copper density (g/cm^3)	4.600E-01	-8.720E+04	0.2332	-4.011E+04
Collimator A lead thickness (cm)	2.887E-02	2.080E+05	0.2350	6.005E+03
Collimator A lead density (g/cm^3)	1.720E-01	1.300E+04	>0.50	negligible
Collimator A PPB9 density (g/cm^3)	6.282E-02	1.060E+06	0.0733	6.658E+04
Collimator A PPB9 H content (wf)	1.744E-03	6.010E+06	0.4049	1.048E+04
Collimator A PPB9 B content (wf)	6.158E-04	-1.242E+08	0.1304	-7.650E+04
Collimator A X position in room (cm)	1.000E+00	-6.624E+04	0.0276	-6.624E+04
Collimator A Y position in room (cm)	1.000E+00	9.666E+04	>0.50	negligible
Collimator A Z position in room (cm)	1.000E+00	-1.271E+04	0.1741	-1.271E+04
Collimator A foil holder base thickness (cm)	2.887E-02	-7.518E+04	>0.50	negligible
Collimator A foil holder base density (g/cm^3)	3.425E-01	-2.812E+04	>0.50	negligible
Collimator A foil holder base Mg content (wf)	2.887E-03	7.046E+05	>0.50	negligible
Collimator A foil holder back plate thickness (cm)	2.887E-02	5.052E+05	>0.50	negligible
Collimator A foil holder back plate density (g/cm^3)	3.425E-01	1.516E+04	>0.50	negligible
Collimator A foil holder back plate Mg content (wf)	2.887E-03	-2.700E+05	>0.50	negligible
Collimator A foil holder cover thickness (cm)	2.887E-02	1.872E+05	>0.50	negligible
Collimator A foil holder cover density (g/cm^3)	3.425E-01	-2.784E+04	>0.50	negligible
Collimator A foil holder cover Mg content (wf)	2.887E-03	-7.998E+04	>0.50	negligible
Collimator A In foil thickness (cm)	5.774E-03	-4.176E+07	0.0228	-2.411E+05
Collimator A In foil radius (cm)	5.774E-03	-6.376E+05	>0.50	negligible
Collimator A In foil mass (g)	4.902E-03	-5.697E+05	0.0409	-2.793E+03
Lead shield thickness (cm)	2.887E-02	-2.001E+05	0.0236	-5.777E+03
Lead shield density (g/cm^3)	4.500E-02	-2.027E+05	0.0800	-9.122E+03
Lead shield Ni content (wf)	7.550E-07	-4.396E+08	>0.50	negligible
Lead shield Fe content (wf)	2.850E-07	-1.185E+09	>0.50	negligible
Lead shield Cr content (wf)	1.625E-08	-4.107E+09	>0.50	negligible
Lead shield Bi content (wf)	2.050E-04	7.324E+05	>0.50	negligible
Lead shield Al content (wf)	8.000E-08	-2.121E+09	>0.50	negligible
Lead shield Ag content (wf)	1.500E-05	-1.278E+07	>0.50	negligible
Total experimental uncertainty absolute (σ_{tot}^d)				5.917E+05
Total experimental uncertainty relative				0.0744

ALARM-TRAN-PB-SHIELD-001

Table I-6. Case 1 collimator A ^{115}In(n,n'γ)^{115m}In experimental uncertainties

Uncertainty source	Uncertainty value (σ_i)	Sensitivity (S_i^d)		σ_i^d
		Value	Unc	
Measurement uncertainty	1.721%			1.050E+02
Number of fissions	6.000%			3.660E+02
SILENE room concrete density (g/cm^3)	2.000E-01	2.735E+01	>0.50	negligible
SILENE room concrete H content (wf)	1.050E-04	-3.436E+03	>0.50	negligible
SILENE room concrete B content (wf)	5.450E-07	-3.022E+06	>0.50	negligible
SILENE assembly wall thickness (cm)	2.887E-02	-7.015E+02	0.1164	-2.025E+01
SILENE assembly wall density (g/cm^3)	4.500E-01	-5.489E+01	0.3011	-2.470E+01
SILENE assembly wall Cr content (wf)	5.774E-03	1.469E+02	>0.50	negligible
SILENE assembly wall Ni content (wf)	5.774E-03	-5.651E+01	>0.50	negligible
Critical height (cm)	5.000E-04	-7.884E+01	0.0121	-3.942E-02
Solution concentration (g/L)	5.000E-02	-1.630E+01	>0.50	negligible
Solution density (g/cm^3)	5.456E-03	-4.047E+03	0.1435	-2.208E+01
Solution uranium enrichment (wf)	1.500E-05	-1.718E-01	>0.50	negligible
Solution temperature (deg C)	1.260E+01	2.943E+00	>0.50	negligible
Collimator A inner stainless steel thickness (cm)	2.887E-02	1.254E+02	>0.50	negligible
Collimator A inner stainless steel density (g/cm^3)	3.900E-01	-8.377E+00	>0.50	negligible
Collimator A inner stainless steel Cr content (wf)	5.774E-03	-3.753E+01	>0.50	negligible
Collimator A inner stainless steel Ni content (wf)	5.774E-03	6.598E+02	>0.50	negligible
Collimator A copper thickness (cm)	2.887E-02	-6.717E+01	>0.50	negligible
Collimator A copper density (g/cm^3)	4.600E-01	1.011E+01	>0.50	negligible
Collimator A lead thickness (cm)	2.887E-02	3.187E+02	0.1025	9.200E+00
Collimator A lead density (g/cm^3)	1.720E-01	3.354E+01	0.3431	5.768E+00
Collimator A PPB9 density (g/cm^3)	6.282E-02	-2.284E+02	0.2306	-1.435E+01
Collimator A PPB9 H content (wf)	1.744E-03	-4.077E+03	0.4306	-7.110E+00
Collimator A PPB9 B content (wf)	6.158E-04	-2.659E+02	>0.50	negligible
Collimator A X position in room (cm)	1.000E+00	-4.563E+01	0.0229	-4.563E+01
Collimator A Y position in room (cm)	1.000E+00	2.282E+01	>0.50	negligible
Collimator A Z position in room (cm)	1.000E+00	-4.417E+00	0.3124	-4.417E+00
Collimator A foil holder base thickness (cm)	2.887E-02	5.322E+01	>0.50	negligible
Collimator A foil holder base density (g/cm^3)	3.425E-01	4.665E+01	>0.50	negligible
Collimator A foil holder base Mg content (wf)	2.887E-03	-2.781E+02	>0.50	negligible
Collimator A foil holder back plate thickness (cm)	2.887E-02	4.101E+01	>0.50	negligible
Collimator A foil holder back plate density (g/cm^3)	3.425E-01	5.363E+00	>0.50	negligible
Collimator A foil holder back plate Mg content (wf)	2.887E-03	4.000E+00	>0.50	negligible
Collimator A foil holder cover thickness (cm)	2.887E-02	2.527E+02	>0.50	negligible
Collimator A foil holder cover density (g/cm^3)	3.425E-01	1.985E+01	>0.50	negligible
Collimator A foil holder cover Mg content (wf)	2.887E-03	-1.380E+02	>0.50	negligible
Collimator A In foil thickness (cm)	5.774E-03	1.090E+02	>0.50	negligible
Collimator A In foil radius (cm)	5.774E-03	-2.951E+01	>0.50	negligible
Collimator A In foil mass (g)	4.902E-03	-2.166E+00	>0.50	negligible
Lead shield thickness (cm)	2.887E-02	-3.202E+02	0.0102	-9.243E+00
Lead shield density (g/cm^3)	4.500E-02	-2.895E+02	0.0405	-1.303E+01
Lead shield Ni content (wf)	7.550E-07	-2.630E+05	>0.50	negligible
Lead shield Fe content (wf)	2.850E-07	1.985E+05	>0.50	negligible
Lead shield Cr content (wf)	1.625E-08	-1.723E+06	>0.50	negligible
Lead shield Bi content (wf)	2.050E-04	3.710E+02	>0.50	negligible
Lead shield Al content (wf)	8.000E-08	8.037E+05	>0.50	negligible
Lead shield Ag content (wf)	1.500E-05	-6.972E+03	>0.50	negligible
Total experimental uncertainty absolute (σ_{tot}^d)				3.863E+02
Total experimental uncertainty relative				0.0633

ALARM-TRAN-PB-SHIELD-001

Table I-7. Case 1 collimator A $^{56}Fe(n,p)^{56}Mn$ + $^{55}Mn(n,\gamma)^{56}Mn$ experimental uncertainties

Uncertainty source	Uncertainty value (σ_i)	Sensitivity (S_i^d)		σ_i^d
		Value	Unc	
Measurement uncertainty	2.475%			5.000E+01
Number of fissions	6.000%			1.212E+02
SILENE room concrete density (g/cm^3)	2.000E-01	-4.050E+00	>0.50	negligible
SILENE room concrete H content (wf)	1.050E-04	2.111E+04	0.3456	2.216E+00
SILENE room concrete B content (wf)	5.450E-07	-1.065E+07	0.4421	-5.805E+00
SILENE assembly wall thickness (cm)	2.887E-02	-6.489E+02	0.0504	-1.873E+01
SILENE assembly wall density (g/cm^3)	4.500E-01	-4.289E+01	0.1545	-1.930E+01
SILENE assembly wall Cr content (wf)	5.774E-03	-1.424E+02	>0.50	negligible
SILENE assembly wall Ni content (wf)	5.774E-03	-1.254E+02	>0.50	negligible
Critical height (cm)	5.000E-04	-3.214E+01	0.0121	-1.607E-02
Solution concentration (g/L)	5.000E-02	-2.608E+01	0.3340	-1.304E+00
Solution density (g/cm^3)	5.456E-03	-1.468E+03	0.1583	-8.011E+00
Solution uranium enrichment (wf)	1.500E-05	-5.117E+00	0.1105	-7.675E-05
Solution temperature (deg C)	1.260E+01	-2.024E+00	>0.50	negligible
Collimator A inner stainless steel thickness (cm)	2.887E-02	1.503E+02	0.4353	4.338E+00
Collimator A inner stainless steel density (g/cm^3)	3.900E-01	-2.329E+00	>0.50	negligible
Collimator A inner stainless steel Cr content (wf)	5.774E-03	4.603E+01	>0.50	negligible
Collimator A inner stainless steel Ni content (wf)	5.774E-03	-8.796E+01	>0.50	negligible
Collimator A copper thickness (cm)	2.887E-02	-4.389E+02	0.0597	-1.267E+01
Collimator A copper density (g/cm^3)	4.600E-01	-2.806E+01	0.2090	-1.291E+01
Collimator A lead thickness (cm)	2.887E-02	4.437E+01	0.2946	1.281E+00
Collimator A lead density (g/cm^3)	1.720E-01	-3.301E+00	>0.50	negligible
Collimator A PPB9 density (g/cm^3)	6.282E-02	3.214E+02	0.0666	2.019E+01
Collimator A PPB9 H content (wf)	1.744E-03	2.209E+03	0.3177	3.854E+00
Collimator A PPB9 B content (wf)	6.158E-04	-3.104E+04	0.1505	-1.911E+01
Collimator A X position in room (cm)	1.000E+00	-1.507E+01	0.0310	-1.507E+01
Collimator A Y position in room (cm)	1.000E+00	2.681E+01	>0.50	negligible
Collimator A Z position in room (cm)	1.000E+00	-3.056E+00	0.1986	-3.056E+00
Collimator A foil holder base thickness (cm)	2.887E-02	-5.031E+01	>0.50	negligible
Collimator A foil holder base density (g/cm^3)	3.425E-01	2.271E+00	>0.50	negligible
Collimator A foil holder base Mg content (wf)	2.887E-03	1.719E+02	>0.50	negligible
Collimator A foil holder back plate thickness (cm)	2.887E-02	1.069E+02	>0.50	negligible
Collimator A foil holder back plate density (g/cm^3)	3.425E-01	-4.818E+00	>0.50	negligible
Collimator A foil holder back plate Mg content (wf)	2.887E-03	9.054E+00	>0.50	negligible
Collimator A foil holder cover thickness (cm)	2.887E-02	3.482E+01	>0.50	negligible
Collimator A foil holder cover density (g/cm^3)	3.425E-01	2.552E+00	>0.50	negligible
Collimator A foil holder cover Mg content (wf)	2.887E-03	1.886E+02	>0.50	negligible
Collimator A Fe foil thickness (cm)	1.732E-02	3.153E+00	>0.50	negligible
Collimator A Fe foil radius (cm)	1.443E-02	1.092E+02	>0.50	negligible
Collimator A Fe foil mass (g)	1.458E-02	3.153E+00	>0.50	negligible
Collimator A Fe foil Mn content (wf)	5.000E-05	-1.673E+01	>0.50	negligible
Lead shield thickness (cm)	2.887E-02	-5.058E+01	0.0267	-1.460E+00
Lead shield density (g/cm^3)	4.500E-02	-4.055E+01	0.1152	-1.825E+00
Lead shield Ni content (wf)	7.550E-07	9.831E+04	>0.50	negligible
Lead shield Fe content (wf)	2.850E-07	-4.704E+04	>0.50	negligible
Lead shield Cr content (wf)	1.625E-08	-9.979E+05	>0.50	negligible
Lead shield Bi content (wf)	2.050E-04	6.435E+01	>0.50	negligible
Lead shield Al content (wf)	8.000E-08	1.477E+06	>0.50	negligible
Lead shield Ag content (wf)	1.500E-05	-5.660E+03	>0.50	negligible
Total experimental uncertainty absolute (σ_{tot}^d)				1.393E+02
Total experimental uncertainty relative				0.0689

ALARM-TRAN-PB-SHIELD-001

Table I-8. Case 1 collimator A $^{24}Mg(n,p)^{24}Na$ experimental uncertainties

Uncertainty source	Uncertainty value (σ_i)	Sensitivity (S_i^d)		σ_i^d
		Value	Unc	
Measurement uncertainty	2.016%			5.000E-01
Number of fissions	6.000%			1.488E+00
SILENE room concrete density (g/cm^3)	2.000E-01	2.225E-01	>0.50	negligible
SILENE room concrete H content (wf)	1.050E-04	-9.006E+01	>0.50	negligible
SILENE room concrete B content (wf)	5.450E-07	-1.848E+04	>0.50	negligible
SILENE assembly wall thickness (cm)	2.887E-02	-4.767E+00	0.3695	-1.376E-01
SILENE assembly wall density (g/cm^3)	4.500E-01	-4.539E-01	>0.50	negligible
SILENE assembly wall Cr content (wf)	5.774E-03	-1.679E+00	>0.50	negligible
SILENE assembly wall Ni content (wf)	5.774E-03	-2.292E+00	>0.50	negligible
Critical height (cm)	5.000E-04	-1.621E-01	0.1306	-8.103E-05
Solution concentration (g/L)	5.000E-02	-1.259E-01	>0.50	negligible
Solution density (g/cm^3)	5.456E-03	-3.411E+01	0.3666	-1.861E-01
Solution uranium enrichment (wf)	1.500E-05	-5.102E-03	>0.50	negligible
Solution temperature (deg C)	1.260E+01	5.366E-03	>0.50	negligible
Collimator A inner stainless steel thickness (cm)	2.887E-02	-2.289E+00	>0.50	negligible
Collimator A inner stainless steel density (g/cm^3)	3.900E-01	-1.479E-01	>0.50	negligible
Collimator A inner stainless steel Cr content (wf)	5.774E-03	2.202E+00	>0.50	negligible
Collimator A inner stainless steel Ni content (wf)	5.774E-03	3.091E+00	>0.50	negligible
Collimator A copper thickness (cm)	2.887E-02	-1.014E+00	>0.50	negligible
Collimator A copper density (g/cm^3)	4.600E-01	1.777E-01	>0.50	negligible
Collimator A lead thickness (cm)	2.887E-02	6.644E-01	>0.50	negligible
Collimator A lead density (g/cm^3)	1.720E-01	2.177E-01	>0.50	negligible
Collimator A PPB9 density (g/cm^3)	6.282E-02	-2.144E-01	>0.50	negligible
Collimator A PPB9 H content (wf)	1.744E-03	-1.181E+01	>0.50	negligible
Collimator A PPB9 B content (wf)	6.158E-04	-1.023E+02	>0.50	negligible
Collimator A X position in room (cm)	1.000E+00	-2.331E-01	0.0342	-2.331E-01
Collimator A Y position in room (cm)	1.000E+00	-2.199E-01	>0.50	negligible
Collimator A Z position in room (cm)	1.000E+00	-9.159E-03	>0.50	negligible
Collimator A foil holder base thickness (cm)	2.887E-02	2.450E-01	>0.50	negligible
Collimator A foil holder base density (g/cm^3)	3.425E-01	2.206E-01	>0.50	negligible
Collimator A foil holder base Mg content (wf)	2.887E-03	2.321E-13	>0.50	negligible
Collimator A foil holder back plate thickness (cm)	2.887E-02	2.850E-01	>0.50	negligible
Collimator A foil holder back plate density (g/cm^3)	3.425E-01	2.533E-02	>0.50	negligible
Collimator A foil holder back plate Mg content (wf)	2.887E-03	-1.301E-01	>0.50	negligible
Collimator A foil holder cover thickness (cm)	2.887E-02	-2.259E+00	>0.50	negligible
Collimator A foil holder cover density (g/cm^3)	3.425E-01	-4.437E-02	>0.50	negligible
Collimator A foil holder cover Mg content (wf)	2.887E-03	-1.661E+00	>0.50	negligible
Collimator A Mg foil thickness (cm)	1.155E-02	-4.326E-01	>0.50	negligible
Collimator A Mg foil radius (cm)	1.443E-02	-1.593E+00	>0.50	negligible
Collimator A Mg foil mass (g)	2.180E-03	-8.884E-02	>0.50	negligible
Lead shield thickness (cm)	2.887E-02	-2.983E+00	0.0240	-8.611E-02
Lead shield density (g/cm^3)	4.500E-02	-2.663E+00	0.0946	-1.199E-01
Lead shield Ni content (wf)	7.550E-07	9.891E+02	>0.50	negligible
Lead shield Fe content (wf)	2.850E-07	-3.163E+02	>0.50	negligible
Lead shield Cr content (wf)	1.625E-08	-1.863E+04	>0.50	negligible
Lead shield Bi content (wf)	2.050E-04	1.368E+00	>0.50	negligible
Lead shield Al content (wf)	8.000E-08	5.318E+02	>0.50	negligible
Lead shield Ag content (wf)	1.500E-05	-8.301E+01	>0.50	negligible
Total experimental uncertainty absolute (σ_{tot}^d)				1.604E+00
Total experimental uncertainty relative				0.0647

ALARM-TRAN-PB-SHIELD-001

Table I-9. Case 1 collimator A ^{58}Ni(n,p)^{58}Co experimental uncertainties

Uncertainty source	Uncertainty value (σ_i)	Sensitivity (S_i^d)		σ_i^d
		Value	Unc	
Measurement uncertainty	1.603%			1.100E-01
Number of fissions	6.000%			4.116E-01
SILENE room concrete density (g/cm^3)	2.000E-01	5.071E-02	>0.50	negligible
SILENE room concrete H content (wf)	1.050E-04	-1.477E+01	>0.50	negligible
SILENE room concrete B content (wf)	5.450E-07	-4.812E+03	>0.50	negligible
SILENE assembly wall thickness (cm)	2.887E-02	-1.233E+00	0.0981	-3.559E-02
SILENE assembly wall density (g/cm^3)	4.500E-01	-9.313E-02	0.2630	-4.191E-02
SILENE assembly wall Cr content (wf)	5.774E-03	-2.944E-01	>0.50	negligible
SILENE assembly wall Ni content (wf)	5.774E-03	3.282E-01	>0.50	negligible
Critical height (cm)	5.000E-04	-7.984E-02	0.0187	-3.992E-05
Solution concentration (g/L)	5.000E-02	-1.433E-02	>0.50	negligible
Solution density (g/cm^3)	5.456E-03	-6.139E+00	0.1403	-3.349E-02
Solution uranium enrichment (wf)	1.500E-05	-6.259E-05	>0.50	negligible
Solution temperature (deg C)	1.260E+01	-2.352E-04	>0.50	negligible
Collimator A inner stainless steel thickness (cm)	2.887E-02	1.407E-01	>0.50	negligible
Collimator A inner stainless steel density (g/cm^3)	3.900E-01	1.585E-02	>0.50	negligible
Collimator A inner stainless steel Cr content (wf)	5.774E-03	-2.612E-01	>0.50	negligible
Collimator A inner stainless steel Ni content (wf)	5.774E-03	-2.656E-02	>0.50	negligible
Collimator A copper thickness (cm)	2.887E-02	-1.809E-01	>0.50	negligible
Collimator A copper density (g/cm^3)	4.600E-01	-6.399E-03	>0.50	negligible
Collimator A lead thickness (cm)	2.887E-02	1.856E-01	0.2606	5.358E-03
Collimator A lead density (g/cm^3)	1.720E-01	2.835E-02	>0.50	negligible
Collimator A PPB9 density (g/cm^3)	6.282E-02	-2.971E-01	0.2632	-1.866E-02
Collimator A PPB9 H content (wf)	1.744E-03	-2.652E+00	>0.50	negligible
Collimator A PPB9 B content (wf)	6.158E-04	7.901E-01	>0.50	negligible
Collimator A X position in room (cm)	1.000E+00	-6.222E-02	0.0226	-6.222E-02
Collimator A Y position in room (cm)	1.000E+00	-2.803E-02	>0.50	negligible
Collimator A Z position in room (cm)	1.000E+00	-3.837E-03	0.4706	-3.837E-03
Collimator A foil holder base thickness (cm)	2.887E-02	3.080E-02	>0.50	negligible
Collimator A foil holder base density (g/cm^3)	3.425E-01	2.491E-02	>0.50	negligible
Collimator A foil holder base Mg content (wf)	2.887E-03	-5.999E-02	>0.50	negligible
Collimator A foil holder back plate thickness (cm)	2.887E-02	-9.350E-02	>0.50	negligible
Collimator A foil holder back plate density (g/cm^3)	3.425E-01	2.309E-03	>0.50	negligible
Collimator A foil holder back plate Mg content (wf)	2.887E-03	2.199E-02	>0.50	negligible
Collimator A foil holder cover thickness (cm)	2.887E-02	2.596E-01	>0.50	negligible
Collimator A foil holder cover density (g/cm^3)	3.425E-01	1.888E-02	>0.50	negligible
Collimator A foil holder cover Mg content (wf)	2.887E-03	1.440E-01	>0.50	negligible
Collimator A Ni foil thickness (cm)	1.155E-02	-2.619E-01	>0.50	negligible
Collimator A Ni foil radius (cm)	1.443E-02	1.575E-01	>0.50	negligible
Collimator A Ni foil mass (g)	1.159E-02	-6.197E-04	>0.50	negligible
Lead shield thickness (cm)	2.887E-02	-6.218E-01	0.0081	-1.795E-02
Lead shield density (g/cm^3)	4.500E-02	-5.646E-01	0.0314	-2.541E-02
Lead shield Ni content (wf)	7.550E-07	2.052E+01	>0.50	negligible
Lead shield Fe content (wf)	2.850E-07	2.998E+02	>0.50	negligible
Lead shield Cr content (wf)	1.625E-08	3.845E+03	>0.50	negligible
Lead shield Bi content (wf)	2.050E-04	1.232E-01	>0.50	negligible
Lead shield Al content (wf)	8.000E-08	-8.248E+02	>0.50	negligible
Lead shield Ag content (wf)	1.500E-05	1.716E+00	>0.50	negligible
Total experimental uncertainty absolute (σ_{tot}^d)				4.358E-01
Total experimental uncertainty relative				0.0635

ALARM-TRAN-PB-SHIELD-001

Table I-10. Case 1 collimator A Al_2O_3 TLD experimental uncertainties

Uncertainty source	Uncertainty value (σ_i)	Sensitivity (S_i^d)		σ_i^d
		Value	Unc	
Measurement uncertainty	5.000%			4.100E-02
Number of fissions	6.000%			4.920E-02
SILENE room concrete density (g/cm^3)	2.000E-01	1.968E-02	>0.50	negligible
SILENE room concrete H content (wf)	1.050E-04	4.753E+00	>0.50	negligible
SILENE room concrete B content (wf)	5.450E-07	-2.644E+03	>0.50	negligible
SILENE assembly wall thickness (cm)	2.887E-02	-1.176E-01	0.2709	-3.394E-03
SILENE assembly wall density (g/cm^3)	4.500E-01	-1.547E-02	0.4198	-6.961E-03
SILENE assembly wall Cr content (wf)	5.774E-03	1.854E-01	>0.50	negligible
SILENE assembly wall Ni content (wf)	5.774E-03	-1.960E-01	>0.50	negligible
Critical height (cm)	5.000E-04	-8.754E-03	0.0408	-4.377E-06
Solution concentration (g/L)	5.000E-02	6.087E-03	>0.50	negligible
Solution density (g/cm^3)	5.456E-03	-3.876E-01	>0.50	negligible
Solution uranium enrichment (wf)	1.500E-05	-1.117E-03	0.4710	-1.675E-08
Solution temperature (deg C)	1.260E+01	-1.203E-03	>0.50	negligible
Collimator A inner stainless steel thickness (cm)	2.887E-02	-1.275E-02	>0.50	negligible
Collimator A inner stainless steel density (g/cm^3)	3.900E-01	-2.127E-03	>0.50	negligible
Collimator A inner stainless steel Cr content (wf)	5.774E-03	2.680E-01	>0.50	negligible
Collimator A inner stainless steel Ni content (wf)	5.774E-03	-1.221E-01	>0.50	negligible
Collimator A copper thickness (cm)	2.887E-02	3.670E-01	0.0851	1.060E-02
Collimator A copper density (g/cm^3)	4.600E-01	2.085E-02	0.2517	9.591E-03
Collimator A lead thickness (cm)	2.887E-02	-7.275E-02	0.1647	-2.100E-03
Collimator A lead density (g/cm^3)	1.720E-01	-3.388E-03	>0.50	negligible
Collimator A PPB9 density (g/cm^3)	6.282E-02	6.781E-02	0.3242	4.259E-03
Collimator A PPB9 H content (wf)	1.744E-03	3.504E-02	>0.50	negligible
Collimator A PPB9 B content (wf)	6.158E-04	-8.582E+00	>0.50	negligible
Collimator A X position in room (cm)	1.000E+00	-4.460E-03	0.0846	-4.460E-03
Collimator A Y position in room (cm)	1.000E+00	-2.331E-02	>0.50	negligible
Collimator A Z position in room (cm)	1.000E+00	-1.236E-03	>0.50	negligible
Collimator A foil holder base thickness (cm)	2.887E-02	-1.369E-02	>0.50	negligible
Collimator A foil holder base density (g/cm^3)	3.425E-01	-3.006E-03	>0.50	negligible
Collimator A foil holder base Mg content (wf)	2.887E-03	-2.913E-01	>0.50	negligible
Collimator A foil holder back plate thickness (cm)	2.887E-02	6.250E-02	>0.50	negligible
Collimator A foil holder back plate density (g/cm^3)	3.425E-01	2.124E-03	>0.50	negligible
Collimator A foil holder back plate Mg content (wf)	2.887E-03	1.377E-01	>0.50	negligible
Collimator A foil holder cover thickness (cm)	2.887E-02	-1.878E-02	>0.50	negligible
Collimator A foil holder cover density (g/cm^3)	3.425E-01	-1.825E-03	>0.50	negligible
Collimator A foil holder cover Mg content (wf)	2.887E-03	-5.342E-02	>0.50	negligible
Lead shield thickness (cm)	2.887E-02	-3.103E-02	0.0500	-8.958E-04
Lead shield density (g/cm^3)	4.500E-02	-3.068E-02	0.1471	-1.381E-03
Lead shield Ni content (wf)	7.550E-07	5.268E+01	>0.50	negligible
Lead shield Fe content (wf)	2.850E-07	5.742E+00	>0.50	negligible
Lead shield Cr content (wf)	1.625E-08	3.813E+03	>0.50	negligible
Lead shield Bi content (wf)	2.050E-04	1.750E-01	>0.50	negligible
Lead shield Al content (wf)	8.000E-08	-5.848E+02	>0.50	negligible
Lead shield Ag content (wf)	1.500E-05	5.178E-01	>0.50	negligible
Total experimental uncertainty absolute (σ_{tot}^d)				6.640E-02
Total experimental uncertainty relative				0.0810

ALARM-TRAN-PB-SHIELD-001

I.2 Case 2 Collimator B Uncertainties

Table I-11. Case 2 collimator B $^{59}Co(n,\gamma)^{60}Co$ experimental uncertainties

Uncertainty source	Uncertainty value (σ_i)	Sensitivity (S_i^d)		σ_i^d
		Value	Unc	
Measurement uncertainty	2.167%			7.000E-01
Number of fissions	6.000%			1.938E+00
SILENE room concrete density (g/cm^3)	2.000E-01	-1.740E-01	>0.50	negligible
SILENE room concrete H content (wf)	1.050E-04	-2.299E+02	0.3625	-2.414E-02
SILENE room concrete B content (wf)	5.450E-07	1.453E+04	>0.50	negligible
SILENE assembly wall thickness (cm)	2.887E-02	-3.593E+00	0.1039	-1.037E-01
SILENE assembly wall density (g/cm^3)	4.500E-01	-3.528E-01	0.2145	-1.588E-01
SILENE assembly wall Cr content (wf)	5.774E-03	5.764E-01	>0.50	negligible
SILENE assembly wall Ni content (wf)	5.774E-03	2.791E+00	>0.50	negligible
Critical height (cm)	5.000E-04	-6.948E-01	0.0065	-3.474E-04
Solution concentration (g/L)	5.000E-02	5.492E-02	>0.50	negligible
Solution density (g/cm^3)	5.451E-03	-2.341E+01	0.1133	-1.276E-01
Solution uranium enrichment (wf)	1.500E-05	-3.373E-03	>0.50	negligible
Solution temperature (deg C)	1.260E+01	3.953E-03	>0.50	negligible
Collimator B inner stainless steel thickness (cm)	2.887E-02	5.665E+00	0.1316	1.635E-01
Collimator B inner stainless steel density (g/cm^3)	3.900E-01	-1.113E-01	>0.50	negligible
Collimator B inner stainless steel Cr content (wf)	5.774E-03	-5.237E+00	>0.50	negligible
Collimator B inner stainless steel Ni content (wf)	5.774E-03	4.042E+00	>0.50	negligible
Collimator B copper thickness (cm)	2.887E-02	-8.014E+00	0.0373	-2.314E-01
Collimator B copper density (g/cm^3)	4.600E-01	-3.999E-01	0.1675	-1.840E-01
Collimator B lead thickness (cm)	2.887E-02	2.269E+00	0.0656	6.550E-02
Collimator B lead density (g/cm^3)	1.720E-01	1.458E-01	0.3606	2.508E-02
Collimator B PPB9 density (g/cm^3)	6.282E-02	3.772E+00	0.0646	2.369E-01
Collimator B PPB9 H content (wf)	1.744E-03	2.660E+01	0.3012	4.639E-02
Collimator B PPB9 B content (wf)	6.158E-04	-5.709E+02	0.0934	-3.516E-01
Collimator B X position in room (cm)	1.000E+00	-2.064E-01	0.0354	-2.064E-01
Collimator B Y position in room (cm)	1.000E+00	-2.204E-01	0.0337	-2.204E-01
Collimator B Z position in room (cm)	1.000E+00	-5.461E-02	0.1508	-5.461E-02
Collimator B foil holder base thickness (cm)	2.887E-02	3.271E-01	>0.50	negligible
Collimator B foil holder base density (g/cm^3)	3.425E-01	1.015E-01	>0.50	negligible
Collimator B foil holder base Mg content (wf)	2.887E-03	1.171E+00	>0.50	negligible
Collimator B foil holder back plate thickness (cm)	2.887E-02	2.754E-01	>0.50	negligible
Collimator B foil holder back plate density (g/cm^3)	3.425E-01	1.100E-01	>0.50	negligible
Collimator B foil holder back plate Mg content (wf)	2.887E-03	3.804E-01	>0.50	negligible
Collimator B foil holder cover thickness (cm)	2.887E-02	-1.004E+00	>0.50	negligible
Collimator B foil holder cover density (g/cm^3)	3.425E-01	1.230E-02	>0.50	negligible
Collimator B foil holder cover Mg content (wf)	2.887E-03	1.302E-01	>0.50	negligible
Collimator B Co foil thickness (cm)	1.155E-02	-5.414E+01	0.0276	-6.251E-01
Collimator B Co foil radius (cm)	1.443E-02	-2.713E+00	>0.50	negligible
Collimator B Co foil mass (g)	1.159E-02	-1.274E+00	0.0509	-1.476E-02
Standard concrete thickness (cm)	2.887E-02	2.474E-01	>0.50	negligible
Standard concrete density (g/cm^3)	1.150E-01	-9.968E+00	0.0260	-1.146E+00
Standard concrete Al content (wf)	5.000E-05	1.838E+01	>0.50	negligible
Standard concrete Ca content (wf)	5.000E-05	5.552E-01	>0.50	negligible
Standard concrete Cl content (wf)	5.000E-05	-6.207E+02	>0.50	negligible
Standard concrete H content (wf)	5.000E-05	3.416E+02	0.2725	1.708E-02
Standard concrete Fe content (wf)	5.000E-05	2.621E+01	>0.50	negligible
Standard concrete Mn content (wf)	5.000E-05	-5.430E+02	>0.50	negligible
Standard concrete Si content (wf)	5.000E-05	1.737E+00	>0.50	negligible
Lead shield thickness (cm)	2.887E-02	-5.078E-01	0.0294	-1.466E-02
Lead shield density (g/cm^3)	4.500E-02	-5.375E-01	0.0991	-2.419E-02
Lead shield Ni content (wf)	7.550E-07	1.639E+03	>0.50	negligible
Lead shield Fe content (wf)	2.850E-07	-6.885E+03	>0.50	negligible
Lead shield Cr content (wf)	1.625E-08	-1.926E+04	>0.50	negligible
Lead shield Bi content (wf)	2.050E-04	3.374E+00	>0.50	negligible
Lead shield Al content (wf)	8.000E-08	-2.067E+03	>0.50	negligible
Lead shield Ag content (wf)	1.500E-05	2.120E+01	>0.50	negligible
Total experimental uncertainty absolute (σ_{tot}^d)				2.530E+00
Total experimental uncertainty relative				0.0783

ALARM-TRAN-PB-SHIELD-001

Table I-12. Case 2 collimator B $^{197}Au(n,\gamma)^{198}Au$ experimental uncertainties

Uncertainty source	Uncertainty value (σ_i)	Sensitivity (S_i^d)		σ_i^d
		Value	Unc	
Measurement uncertainty	1.548%			4.800E+02
Number of fissions	6.000%			1.861E+03
SILENE room concrete density (g/cm^3)	2.000E-01	-3.333E+02	>0.50	negligible
SILENE room concrete H content (wf)	1.050E-04	-2.246E+05	0.4498	-2.358E+01
SILENE room concrete B content (wf)	5.450E-07	2.507E+07	>0.50	negligible
SILENE assembly wall thickness (cm)	2.887E-02	-4.338E+03	0.1086	-1.252E+02
SILENE assembly wall density (g/cm^3)	4.500E-01	-2.547E+02	0.3601	-1.146E+02
SILENE assembly wall Cr content (wf)	5.774E-03	1.698E+03	>0.50	negligible
SILENE assembly wall Ni content (wf)	5.774E-03	-1.788E+03	>0.50	negligible
Critical height (cm)	5.000E-04	-7.042E+02	0.0078	-3.521E-01
Solution concentration (g/L)	5.000E-02	4.711E+01	>0.50	negligible
Solution density (g/cm^3)	5.451E-03	-2.524E+04	0.1275	-1.376E+02
Solution uranium enrichment (wf)	1.500E-05	-9.200E+00	>0.50	negligible
Solution temperature (deg C)	1.260E+01	8.014E+00	>0.50	negligible
Collimator B inner stainless steel thickness (cm)	2.887E-02	5.270E+03	0.1718	1.521E+02
Collimator B inner stainless steel density (g/cm^3)	3.900E-01	-7.329E+00	>0.50	negligible
Collimator B inner stainless steel Cr content (wf)	5.774E-03	-2.543E+03	>0.50	negligible
Collimator B inner stainless steel Ni content (wf)	5.774E-03	2.841E+03	>0.50	negligible
Collimator B copper thickness (cm)	2.887E-02	-6.220E+03	0.0583	-1.795E+02
Collimator B copper density (g/cm^3)	4.600E-01	-1.654E+02	>0.50	negligible
Collimator B lead thickness (cm)	2.887E-02	2.581E+03	0.0702	7.450E+01
Collimator B lead density (g/cm^3)	1.720E-01	2.265E+02	0.2935	3.895E+01
Collimator B PPB9 density (g/cm^3)	6.282E-02	2.027E+03	0.1453	1.273E+02
Collimator B PPB9 H content (wf)	1.744E-03	1.170E+04	>0.50	negligible
Collimator B PPB9 B content (wf)	6.158E-04	-5.266E+05	0.1230	-3.243E+02
Collimator B X position in room (cm)	1.000E+00	-2.254E+02	0.0408	-2.254E+02
Collimator B Y position in room (cm)	1.000E+00	-2.242E+02	0.0374	-2.242E+02
Collimator B Z position in room (cm)	1.000E+00	-6.859E+01	0.1281	-6.859E+01
Collimator B foil holder base thickness (cm)	2.887E-02	3.504E+02	>0.50	negligible
Collimator B foil holder base density (g/cm^3)	3.425E-01	-7.072E+00	>0.50	negligible
Collimator B foil holder base Mg content (wf)	2.887E-03	1.639E+03	>0.50	negligible
Collimator B foil holder back plate thickness (cm)	2.887E-02	-1.299E+03	>0.50	negligible
Collimator B foil holder back plate density (g/cm^3)	3.425E-01	-1.913E+02	>0.50	negligible
Collimator B foil holder back plate Mg content (wf)	2.887E-03	3.988E+03	>0.50	negligible
Collimator B foil holder cover thickness (cm)	2.887E-02	-1.063E+03	>0.50	negligible
Collimator B foil holder cover density (g/cm^3)	3.425E-01	8.635E+01	>0.50	negligible
Collimator B foil holder cover Mg content (wf)	2.887E-03	8.388E+02	>0.50	negligible
Collimator B Au foil thickness (cm)	1.443E-03	-3.643E+05	0.0398	-5.257E+02
Collimator B Au foil radius (cm)	5.774E-03	-3.797E+02	>0.50	negligible
Collimator B Au foil mass (g)	3.068E-03	-4.947E+02	0.0751	-1.518E+00
Standard concrete thickness (cm)	2.887E-02	1.096E+02	>0.50	negligible
Standard concrete density (g/cm^3)	1.150E-01	-1.325E+04	0.0238	-1.524E+03
Standard concrete Al content (wf)	5.000E-05	4.479E+04	0.2474	2.239E+00
Standard concrete Ca content (wf)	5.000E-05	9.945E+03	>0.50	negligible
Standard concrete Cl content (wf)	5.000E-05	-1.294E+07	>0.50	negligible
Standard concrete H content (wf)	5.000E-05	-6.105E+05	0.2177	-3.053E+01
Standard concrete Fe content (wf)	5.000E-05	-1.051E+04	>0.50	negligible
Standard concrete Mn content (wf)	5.000E-05	-3.319E+06	>0.50	negligible
Standard concrete Si content (wf)	5.000E-05	3.348E+03	>0.50	negligible
Lead shield thickness (cm)	2.887E-02	-5.727E+02	0.0317	-1.653E+01
Lead shield density (g/cm^3)	4.500E-02	-5.312E+02	0.1218	-2.390E+01
Lead shield Ni content (wf)	7.550E-07	3.330E+06	>0.50	negligible
Lead shield Fe content (wf)	2.850E-07	-9.011E+06	>0.50	negligible
Lead shield Cr content (wf)	1.625E-08	-3.302E+07	>0.50	negligible
Lead shield Bi content (wf)	2.050E-04	5.712E+03	>0.50	negligible
Lead shield Al content (wf)	8.000E-08	1.137E+07	>0.50	negligible
Lead shield Ag content (wf)	1.500E-05	-1.350E+04	>0.50	negligible
Total experimental uncertainty absolute (σ_{tot}^d)				2.575E+03
Total experimental uncertainty relative				0.0830

ALARM-TRAN-PB-SHIELD-001

Table I-13. Case 2 collimator B $^{115}In(n,\gamma)^{116}In$ experimental uncertainties

Uncertainty source	Uncertainty value (σ_i)	Sensitivity (S_i^d)		σ_i^d
		Value	Unc	
Measurement uncertainty	1.953%			7.500E+04
Number of fissions	6.000%			2.304E+05
SILENE room concrete density (g/cm^3)	2.000E-01	-1.039E+04	>0.50	negligible
SILENE room concrete H content (wf)	1.050E-04	-9.553E+06	>0.50	negligible
SILENE room concrete B content (wf)	5.450E-07	-8.808E+09	>0.50	negligible
SILENE assembly wall thickness (cm)	2.887E-02	-4.478E+05	0.1307	-1.293E+04
SILENE assembly wall density (g/cm^3)	4.500E-01	-5.330E+04	0.2227	-2.399E+04
SILENE assembly wall Cr content (wf)	5.774E-03	7.547E+04	>0.50	negligible
SILENE assembly wall Ni content (wf)	5.774E-03	-5.370E+05	>0.50	negligible
Critical height (cm)	5.000E-04	-8.498E+04	0.0083	-4.249E+01
Solution concentration (g/L)	5.000E-02	-3.931E+03	>0.50	negligible
Solution density (g/cm^3)	5.451E-03	-2.978E+06	0.1400	-1.623E+04
Solution uranium enrichment (wf)	1.500E-05	-6.481E+02	>0.50	negligible
Solution temperature (deg C)	1.260E+01	6.257E+02	>0.50	negligible
Collimator B inner stainless steel thickness (cm)	2.887E-02	6.485E+05	0.1807	1.872E+04
Collimator B inner stainless steel density (g/cm^3)	3.900E-01	5.280E+02	>0.50	negligible
Collimator B inner stainless steel Cr content (wf)	5.774E-03	-5.309E+05	>0.50	negligible
Collimator B inner stainless steel Ni content (wf)	5.774E-03	7.911E+04	>0.50	negligible
Collimator B copper thickness (cm)	2.887E-02	-7.922E+05	0.0592	-2.287E+04
Collimator B copper density (g/cm^3)	4.600E-01	-3.336E+04	0.3266	-1.534E+04
Collimator B lead thickness (cm)	2.887E-02	3.231E+05	0.0776	9.326E+03
Collimator B lead density (g/cm^3)	1.720E-01	8.468E+03	>0.50	negligible
Collimator B PPB9 density (g/cm^3)	6.282E-02	3.704E+05	0.1030	2.327E+04
Collimator B PPB9 H content (wf)	1.744E-03	2.941E+06	0.4276	5.129E+03
Collimator B PPB9 B content (wf)	6.158E-04	-6.132E+07	0.1363	-3.777E+04
Collimator B X position in room (cm)	1.000E+00	-2.833E+04	0.0384	-2.833E+04
Collimator B Y position in room (cm)	1.000E+00	-2.640E+04	0.0382	-2.640E+04
Collimator B Z position in room (cm)	1.000E+00	-8.810E+03	0.1361	-8.810E+03
Collimator B foil holder base thickness (cm)	2.887E-02	-5.250E+04	>0.50	negligible
Collimator B foil holder base density (g/cm^3)	3.425E-01	3.014E+03	>0.50	negligible
Collimator B foil holder base Mg content (wf)	2.887E-03	-3.906E+05	>0.50	negligible
Collimator B foil holder back plate thickness (cm)	2.887E-02	2.550E+05	>0.50	negligible
Collimator B foil holder back plate density (g/cm^3)	3.425E-01	-1.734E+04	>0.50	negligible
Collimator B foil holder back plate Mg content (wf)	2.887E-03	-3.637E+05	>0.50	negligible
Collimator B foil holder cover thickness (cm)	2.887E-02	-1.423E+05	>0.50	negligible
Collimator B foil holder cover density (g/cm^3)	3.425E-01	-1.864E+02	>0.50	negligible
Collimator B foil holder cover Mg content (wf)	2.887E-03	7.081E+05	>0.50	negligible
Collimator B In foil thickness (cm)	5.774E-03	-2.012E+07	0.0234	-1.162E+05
Collimator B In foil radius (cm)	5.774E-03	7.895E+04	>0.50	negligible
Collimator B In foil mass (g)	4.984E-03	-2.703E+05	0.0438	-1.347E+03
Standard concrete thickness (cm)	2.887E-02	3.226E+04	>0.50	negligible
Standard concrete density (g/cm^3)	1.150E-01	-1.411E+06	0.0289	-1.623E+05
Standard concrete Al content (wf)	5.000E-05	3.179E+06	0.4544	1.589E+02
Standard concrete Ca content (wf)	5.000E-05	1.187E+05	>0.50	negligible
Standard concrete Cl content (wf)	5.000E-05	-9.268E+08	>0.50	negligible
Standard concrete H content (wf)	5.000E-05	-2.617E+07	>0.50	negligible
Standard concrete Fe content (wf)	5.000E-05	-1.208E+07	0.4044	-6.040E+02
Standard concrete Mn content (wf)	5.000E-05	-8.539E+07	>0.50	negligible
Standard concrete Si content (wf)	5.000E-05	2.816E+05	>0.50	negligible
Lead shield thickness (cm)	2.887E-02	-6.379E+04	0.0367	-1.842E+03
Lead shield density (g/cm^3)	4.500E-02	-6.223E+04	0.1347	-2.801E+03
Lead shield Ni content (wf)	7.550E-07	-1.946E+08	>0.50	negligible
Lead shield Fe content (wf)	2.850E-07	-4.326E+08	>0.50	negligible
Lead shield Cr content (wf)	1.625E-08	-2.584E+09	>0.50	negligible
Lead shield Bi content (wf)	2.050E-04	-5.422E+05	>0.50	negligible
Lead shield Al content (wf)	8.000E-08	-1.837E+09	>0.50	negligible
Lead shield Ag content (wf)	1.500E-05	2.314E+06	>0.50	negligible
Total experimental uncertainty absolute (σ_{tot}^d)				3.230E+05
Total experimental uncertainty relative				0.0841

ALARM-TRAN-PB-SHIELD-001

Table I-14. Case 2 collimator B ^{115}In(n,n'γ)^{115m}In experimental uncertainties

Uncertainty source	Uncertainty value (σ_i)	Sensitivity (S_i^d)		σ_i^d
		Value	Unc	
Measurement uncertainty	1.968%			1.850E+01
Number of fissions	6.000%			5.640E+01
SILENE room concrete density (g/cm^3)	2.000E-01	-1.058E+01	>0.50	negligible
SILENE room concrete H content (wf)	1.050E-04	-1.445E+03	>0.50	negligible
SILENE room concrete B content (wf)	5.450E-07	4.779E+05	>0.50	negligible
SILENE assembly wall thickness (cm)	2.887E-02	-1.310E+02	0.1238	-3.780E+00
SILENE assembly wall density (g/cm^3)	4.500E-01	-1.071E+01	0.3063	-4.820E+00
SILENE assembly wall Cr content (wf)	5.774E-03	8.105E+00	>0.50	negligible
SILENE assembly wall Ni content (wf)	5.774E-03	-6.295E+00	>0.50	negligible
Critical height (cm)	5.000E-04	-1.205E+01	0.0158	-6.026E-03
Solution concentration (g/L)	5.000E-02	3.164E+00	>0.50	negligible
Solution density (g/cm^3)	5.451E-03	-6.960E+02	0.1656	-3.794E+00
Solution uranium enrichment (wf)	1.500E-05	4.343E-02	>0.50	negligible
Solution temperature (deg C)	1.260E+01	-2.122E-01	>0.50	negligible
Collimator B inner stainless steel thickness (cm)	2.887E-02	5.660E+01	>0.50	negligible
Collimator B inner stainless steel density (g/cm^3)	3.900E-01	1.248E+00	>0.50	negligible
Collimator B inner stainless steel Cr content (wf)	5.774E-03	-9.321E+01	>0.50	negligible
Collimator B inner stainless steel Ni content (wf)	5.774E-03	8.928E+01	>0.50	negligible
Collimator B copper thickness (cm)	2.887E-02	-3.584E+01	0.3609	-1.035E+00
Collimator B copper density (g/cm^3)	4.600E-01	-1.671E+00	>0.50	negligible
Collimator B lead thickness (cm)	2.887E-02	6.009E+01	0.1075	1.735E+00
Collimator B lead density (g/cm^3)	1.720E-01	2.640E+00	>0.50	negligible
Collimator B PPB9 density (g/cm^3)	6.282E-02	-1.051E+02	0.0989	-6.602E+00
Collimator B PPB9 H content (wf)	1.744E-03	-7.428E+02	0.4674	-1.296E+00
Collimator B PPB9 B content (wf)	6.158E-04	-9.781E+02	>0.50	negligible
Collimator B X position in room (cm)	1.000E+00	-5.403E+00	0.0358	-5.403E+00
Collimator B Y position in room (cm)	1.000E+00	-5.182E+00	0.0337	-5.182E+00
Collimator B Z position in room (cm)	1.000E+00	-1.344E+00	0.1881	-1.344E+00
Collimator B foil holder base thickness (cm)	2.887E-02	1.040E+01	>0.50	negligible
Collimator B foil holder base density (g/cm^3)	3.425E-01	1.146E+01	>0.50	negligible
Collimator B foil holder base Mg content (wf)	2.887E-03	1.400E+01	>0.50	negligible
Collimator B foil holder back plate thickness (cm)	2.887E-02	5.224E+01	>0.50	negligible
Collimator B foil holder back plate density (g/cm^3)	3.425E-01	-8.089E-01	>0.50	negligible
Collimator B foil holder back plate Mg content (wf)	2.887E-03	2.041E+01	>0.50	negligible
Collimator B foil holder cover thickness (cm)	2.887E-02	4.064E+01	>0.50	negligible
Collimator B foil holder cover density (g/cm^3)	3.425E-01	6.140E+00	>0.50	negligible
Collimator B foil holder cover Mg content (wf)	2.887E-03	-6.145E+01	>0.50	negligible
Collimator B In foil thickness (cm)	5.774E-03	3.813E+01	>0.50	negligible
Collimator B In foil radius (cm)	5.774E-03	4.091E+01	>0.50	negligible
Collimator B In foil mass (g)	4.984E-03	2.093E-01	>0.50	negligible
Standard concrete thickness (cm)	2.887E-02	-5.990E+00	>0.50	negligible
Standard concrete density (g/cm^3)	1.150E-01	-6.999E+02	0.0161	-8.049E+01
Standard concrete Al content (wf)	5.000E-05	8.316E+02	0.4210	4.158E-02
Standard concrete Ca content (wf)	5.000E-05	7.743E+02	0.3864	3.871E-02
Standard concrete Cl content (wf)	5.000E-05	-1.566E+05	>0.50	negligible
Standard concrete H content (wf)	5.000E-05	-5.735E+04	0.0706	-2.867E+00
Standard concrete Fe content (wf)	5.000E-05	-2.965E+02	>0.50	negligible
Standard concrete Mn content (wf)	5.000E-05	1.258E+04	>0.50	negligible
Standard concrete Si content (wf)	5.000E-05	1.970E+02	0.4868	9.851E-03
Lead shield thickness (cm)	2.887E-02	-6.967E+01	0.0093	-2.011E+00
Lead shield density (g/cm^3)	4.500E-02	-6.925E+01	0.0334	-3.116E+00
Lead shield Ni content (wf)	7.550E-07	-3.949E+04	>0.50	negligible
Lead shield Fe content (wf)	2.850E-07	1.861E+05	>0.50	negligible
Lead shield Cr content (wf)	1.625E-08	3.603E+05	>0.50	negligible
Lead shield Bi content (wf)	2.050E-04	1.457E+02	>0.50	negligible
Lead shield Al content (wf)	8.000E-08	-3.434E+04	>0.50	negligible
Lead shield Ag content (wf)	1.500E-05	-1.351E+03	>0.50	negligible
Total experimental uncertainty absolute (σ_{tot}^d)				1.009E+02
Total experimental uncertainty relative				0.1074

ALARM-TRAN-PB-SHIELD-001

Table I- 15. Case 2 collimator B $^{56}Fe(n,p)^{56}Mn$ + $^{55}Mn(n,\gamma)^{56}Mn$ experimental uncertainties

Uncertainty source	Uncertainty value (σ_i)	Sensitivity (S_i^d)		σ_i^d
		Value	Unc	
Measurement uncertainty	1.442%			1.500E+01
Number of fissions	6.000%			6.240E+01
SILENE room concrete density (g/cm^3)	2.000E-01	1.220E+01	>0.50	negligible
SILENE room concrete H content (wf)	1.050E-04	-1.208E+04	0.2585	-1.269E+00
SILENE room concrete B content (wf)	5.450E-07	-1.861E+06	>0.50	negligible
SILENE assembly wall thickness (cm)	2.887E-02	-1.337E+02	0.1045	-3.859E+00
SILENE assembly wall density (g/cm^3)	4.500E-01	-1.206E+01	0.2347	-5.428E+00
SILENE assembly wall Cr content (wf)	5.774E-03	-1.640E+02	>0.50	negligible
SILENE assembly wall Ni content (wf)	5.774E-03	-4.325E+00	>0.50	negligible
Critical height (cm)	5.000E-04	-2.122E+01	0.0077	-1.061E-02
Solution concentration (g/L)	5.000E-02	-4.298E+00	>0.50	negligible
Solution density (g/cm^3)	5.451E-03	-7.627E+02	0.1251	-4.157E+00
Solution uranium enrichment (wf)	1.500E-05	-3.143E-01	>0.50	negligible
Solution temperature (deg C)	1.260E+01	1.962E-01	>0.50	negligible
Collimator B inner stainless steel thickness (cm)	2.887E-02	1.632E+02	0.1714	4.710E+00
Collimator B inner stainless steel density (g/cm^3)	3.900E-01	9.636E-01	>0.50	negligible
Collimator B inner stainless steel Cr content (wf)	5.774E-03	-1.851E+02	>0.50	negligible
Collimator B inner stainless steel Ni content (wf)	5.774E-03	-2.644E+02	>0.50	negligible
Collimator B copper thickness (cm)	2.887E-02	-2.604E+02	0.0431	-7.518E+00
Collimator B copper density (g/cm^3)	4.600E-01	-6.263E+00	0.3846	-2.881E+00
Collimator B lead thickness (cm)	2.887E-02	7.998E+01	0.0698	2.309E+00
Collimator B lead density (g/cm^3)	1.720E-01	4.895E+00	0.4022	8.420E-01
Collimator B PPB9 density (g/cm^3)	6.282E-02	1.482E+02	0.0587	9.311E+00
Collimator B PPB9 H content (wf)	1.744E-03	7.511E+02	0.3995	1.310E+00
Collimator B PPB9 B content (wf)	6.158E-04	-1.809E+04	0.1061	-1.114E+01
Collimator B X position in room (cm)	1.000E+00	-6.663E+00	0.0373	-6.663E+00
Collimator B Y position in room (cm)	1.000E+00	-6.616E+00	0.0342	-6.616E+00
Collimator B Z position in room (cm)	1.000E+00	-2.205E+00	0.1377	-2.205E+00
Collimator B foil holder base thickness (cm)	2.887E-02	2.440E+00	>0.50	negligible
Collimator B foil holder base density (g/cm^3)	3.425E-01	3.012E+00	>0.50	negligible
Collimator B foil holder base Mg content (wf)	2.887E-03	7.010E+01	>0.50	negligible
Collimator B foil holder back plate thickness (cm)	2.887E-02	7.905E+01	>0.50	negligible
Collimator B foil holder back plate density (g/cm^3)	3.425E-01	-2.737E+00	>0.50	negligible
Collimator B foil holder back plate Mg content (wf)	2.887E-03	6.319E+01	>0.50	negligible
Collimator B foil holder cover thickness (cm)	2.887E-02	-9.907E+00	>0.50	negligible
Collimator B foil holder cover density (g/cm^3)	3.425E-01	-2.444E+00	>0.50	negligible
Collimator B foil holder cover Mg content (wf)	2.887E-03	1.780E+02	>0.50	negligible
Collimator B Fe foil thickness (cm)	1.732E-02	-7.102E+01	>0.50	negligible
Collimator B Fe foil radius (cm)	1.443E-02	-3.748E+01	>0.50	negligible
Collimator B Fe foil mass (g)	1.460E-02	5.573E-01	>0.50	negligible
Collimator B Fe foil Mn content (wf)	5.000E-05	-3.210E+01	>0.50	negligible
Standard concrete thickness (cm)	2.887E-02	-7.938E+00	>0.50	negligible
Standard concrete density (g/cm^3)	1.150E-01	-3.191E+02	0.0292	-3.670E+01
Standard concrete Al content (wf)	5.000E-05	5.835E+02	>0.50	negligible
Standard concrete Ca content (wf)	5.000E-05	-3.007E+02	>0.50	negligible
Standard concrete Cl content (wf)	5.000E-05	1.469E+05	>0.50	negligible
Standard concrete H content (wf)	5.000E-05	1.341E+04	0.2602	6.703E-01
Standard concrete Fe content (wf)	5.000E-05	-1.059E+03	>0.50	negligible
Standard concrete Mn content (wf)	5.000E-05	-2.002E+04	>0.50	negligible
Standard concrete Si content (wf)	5.000E-05	-3.071E+01	>0.50	negligible
Lead shield thickness (cm)	2.887E-02	-1.726E+01	0.0311	-4.982E-01
Lead shield density (g/cm^3)	4.500E-02	-1.777E+01	0.1079	-7.998E-01
Lead shield Ni content (wf)	7.550E-07	4.867E+04	>0.50	negligible
Lead shield Fe content (wf)	2.850E-07	-2.328E+05	>0.50	negligible
Lead shield Cr content (wf)	1.625E-08	1.541E+05	>0.50	negligible
Lead shield Bi content (wf)	2.050E-04	1.375E+02	>0.50	negligible
Lead shield Al content (wf)	8.000E-08	-7.582E+05	>0.50	negligible
Lead shield Ag content (wf)	1.500E-05	3.774E+01	>0.50	negligible
Total experimental uncertainty absolute (σ_{tot}^d)				7.700E+01
Total experimental uncertainty relative				0.0740

ALARM-TRAN-PB-SHIELD-001

Table I-16. Case 2 collimator B $^{24}Mg(n,p)^{24}Na$ experimental uncertainties

Uncertainty source	Uncertainty value (σ_i)	Sensitivity (S_i^d)		σ_i^d
		Value	Unc	
Measurement uncertainty	5.616%			3.100E-01
Number of fissions	6.000%			3.312E-01
SILENE room concrete density (g/cm^3)	2.000E-01	-1.274E-01	>0.50	negligible
SILENE room concrete H content (wf)	1.050E-04	-7.784E+00	>0.50	negligible
SILENE room concrete B content (wf)	5.450E-07	1.089E+04	>0.50	negligible
SILENE assembly wall thickness (cm)	2.887E-02	-1.000E+00	0.4431	-2.887E-02
SILENE assembly wall density (g/cm^3)	4.500E-01	-6.553E-02	>0.50	negligible
SILENE assembly wall Cr content (wf)	5.774E-03	1.113E+00	>0.50	negligible
SILENE assembly wall Ni content (wf)	5.774E-03	-8.245E-01	>0.50	negligible
Critical height (cm)	5.000E-04	-3.810E-02	0.1426	-1.905E-05
Solution concentration (g/L)	5.000E-02	-3.387E-02	>0.50	negligible
Solution density (g/cm^3)	5.451E-03	1.778E-01	>0.50	negligible
Solution uranium enrichment (wf)	1.500E-05	2.064E-03	>0.50	negligible
Solution temperature (deg C)	1.260E+01	-2.052E-03	>0.50	negligible
Collimator B inner stainless steel thickness (cm)	2.887E-02	4.539E-01	>0.50	negligible
Collimator B inner stainless steel density (g/cm^3)	3.900E-01	-5.924E-02	>0.50	negligible
Collimator B inner stainless steel Cr content (wf)	5.774E-03	-1.526E+00	>0.50	negligible
Collimator B inner stainless steel Ni content (wf)	5.774E-03	5.566E-01	>0.50	negligible
Collimator B copper thickness (cm)	2.887E-02	-1.151E-01	>0.50	negligible
Collimator B copper density (g/cm^3)	4.600E-01	9.355E-02	>0.50	negligible
Collimator B lead thickness (cm)	2.887E-02	-2.006E-01	>0.50	negligible
Collimator B lead density (g/cm^3)	1.720E-01	1.320E-02	>0.50	negligible
Collimator B PPB9 density (g/cm^3)	6.282E-02	-5.181E-01	>0.50	negligible
Collimator B PPB9 H content (wf)	1.744E-03	-1.166E+01	>0.50	negligible
Collimator B PPB9 B content (wf)	6.158E-04	2.373E+01	>0.50	negligible
Collimator B X position in room (cm)	1.000E+00	-3.417E-02	0.0767	-3.417E-02
Collimator B Y position in room (cm)	1.000E+00	-3.334E-02	0.0773	-3.334E-02
Collimator B Z position in room (cm)	1.000E+00	-1.338E-02	0.3690	-1.338E-02
Collimator B foil holder base thickness (cm)	2.887E-02	1.668E-01	>0.50	negligible
Collimator B foil holder base density (g/cm^3)	3.425E-01	-1.052E-01	>0.50	negligible
Collimator B foil holder base Mg content (wf)	2.887E-03	-7.010E-01	>0.50	negligible
Collimator B foil holder back plate thickness (cm)	2.887E-02	3.566E-01	>0.50	negligible
Collimator B foil holder back plate density (g/cm^3)	3.425E-01	6.026E-02	>0.50	negligible
Collimator B foil holder back plate Mg content (wf)	2.887E-03	-1.190E-01	>0.50	negligible
Collimator B foil holder cover thickness (cm)	2.887E-02	-1.182E+00	>0.50	negligible
Collimator B foil holder cover density (g/cm^3)	3.425E-01	-7.219E-02	>0.50	negligible
Collimator B foil holder cover Mg content (wf)	2.887E-03	3.097E-02	>0.50	negligible
Collimator B Mg foil thickness (cm)	1.155E-02	-2.367E-01	>0.50	negligible
Collimator B Mg foil radius (cm)	1.443E-02	1.772E-01	>0.50	negligible
Collimator B Mg foil mass (g)	2.176E-03	-5.496E-02	>0.50	negligible
Standard concrete thickness (cm)	2.887E-02	1.531E-01	>0.50	negligible
Standard concrete density (g/cm^3)	1.150E-01	-4.065E+00	0.0759	-4.675E-01
Standard concrete Al content (wf)	5.000E-05	2.857E+00	>0.50	negligible
Standard concrete Ca content (wf)	5.000E-05	1.305E+01	>0.50	negligible
Standard concrete Cl content (wf)	5.000E-05	-1.709E+03	>0.50	negligible
Standard concrete H content (wf)	5.000E-05	-5.475E+01	>0.50	negligible
Standard concrete Fe content (wf)	5.000E-05	-1.647E+01	>0.50	negligible
Standard concrete Mn content (wf)	5.000E-05	-4.447E+02	>0.50	negligible
Standard concrete Si content (wf)	5.000E-05	2.445E+00	>0.50	negligible
Lead shield thickness (cm)	2.887E-02	-6.755E-01	0.0269	-1.950E-02
Lead shield density (g/cm^3)	4.500E-02	-5.763E-01	0.1122	-2.593E-02
Lead shield Ni content (wf)	7.550E-07	-2.638E+02	>0.50	negligible
Lead shield Fe content (wf)	2.850E-07	-3.596E+02	>0.50	negligible
Lead shield Cr content (wf)	1.625E-08	-3.693E+04	>0.50	negligible
Lead shield Bi content (wf)	2.050E-04	1.563E+00	>0.50	negligible
Lead shield Al content (wf)	8.000E-08	5.754E+03	>0.50	negligible
Lead shield Ag content (wf)	1.500E-05	-1.336E+01	>0.50	negligible
Total experimental uncertainty absolute (σ_{tot}^d)				6.547E-01
Total experimental uncertainty relative				0.1186

ALARM-TRAN-PB-SHIELD-001

Table I-17. Case 2 collimator B ^{58}Ni(n,p)^{58}Co experimental uncertainties

Uncertainty source	Uncertainty value (σ_i)	Sensitivity (S_i^d)		σ_i^d
		Value	Unc	
Measurement uncertainty	1.613%			2.050E-02
Number of fissions	6.000%			7.626E-02
SILENE room concrete density (g/cm^3)	2.000E-01	-8.322E-03	>0.50	negligible
SILENE room concrete H content (wf)	1.050E-04	-3.813E+00	>0.50	negligible
SILENE room concrete B content (wf)	5.450E-07	-3.694E+02	>0.50	negligible
SILENE assembly wall thickness (cm)	2.887E-02	-2.637E-01	0.0863	-7.612E-03
SILENE assembly wall density (g/cm^3)	4.500E-01	-1.718E-02	0.2684	-7.730E-03
SILENE assembly wall Cr content (wf)	5.774E-03	-5.150E-02	>0.50	negligible
SILENE assembly wall Ni content (wf)	5.774E-03	5.692E-02	>0.50	negligible
Critical height (cm)	5.000E-04	-1.422E-02	0.0194	-7.111E-06
Solution concentration (g/L)	5.000E-02	1.915E-03	>0.50	negligible
Solution density (g/cm^3)	5.451E-03	-1.219E+00	0.1330	-6.643E-03
Solution uranium enrichment (wf)	1.500E-05	-2.460E-04	>0.50	negligible
Solution temperature (deg C)	1.260E+01	-1.397E-04	>0.50	negligible
Collimator B inner stainless steel thickness (cm)	2.887E-02	2.902E-02	>0.50	negligible
Collimator B inner stainless steel density (g/cm^3)	3.900E-01	3.515E-03	>0.50	negligible
Collimator B inner stainless steel Cr content (wf)	5.774E-03	2.846E-02	>0.50	negligible
Collimator B inner stainless steel Ni content (wf)	5.774E-03	-1.321E-01	>0.50	negligible
Collimator B copper thickness (cm)	2.887E-02	-1.100E-03	>0.50	negligible
Collimator B copper density (g/cm^3)	4.600E-01	3.189E-03	>0.50	negligible
Collimator B lead thickness (cm)	2.887E-02	4.468E-02	0.2036	1.290E-03
Collimator B lead density (g/cm^3)	1.720E-01	3.331E-03	>0.50	negligible
Collimator B PPB9 density (g/cm^3)	6.282E-02	-1.286E-01	0.1139	-8.076E-03
Collimator B PPB9 H content (wf)	1.744E-03	-2.031E+00	0.2407	-3.542E-03
Collimator B PPB9 B content (wf)	6.158E-04	-4.550E-01	>0.50	negligible
Collimator B X position in room (cm)	1.000E+00	-8.377E-03	0.0269	-8.377E-03
Collimator B Y position in room (cm)	1.000E+00	-8.237E-03	0.0348	-8.237E-03
Collimator B Z position in room (cm)	1.000E+00	-1.224E-03	0.2734	-1.224E-03
Collimator B foil holder base thickness (cm)	2.887E-02	8.625E-03	>0.50	negligible
Collimator B foil holder base density (g/cm^3)	3.425E-01	6.581E-03	>0.50	negligible
Collimator B foil holder base Mg content (wf)	2.887E-03	-4.993E-03	>0.50	negligible
Collimator B foil holder back plate thickness (cm)	2.887E-02	1.158E-01	>0.50	negligible
Collimator B foil holder back plate density (g/cm^3)	3.425E-01	8.930E-04	>0.50	negligible
Collimator B foil holder back plate Mg content (wf)	2.887E-03	6.794E-02	>0.50	negligible
Collimator B foil holder cover thickness (cm)	2.887E-02	-5.562E-02	>0.50	negligible
Collimator B foil holder cover density (g/cm^3)	3.425E-01	-2.642E-03	>0.50	negligible
Collimator B foil holder cover Mg content (wf)	2.887E-03	6.094E-02	>0.50	negligible
Collimator B Ni foil thickness (cm)	1.155E-02	-3.745E-02	>0.50	negligible
Collimator B Ni foil radius (cm)	1.443E-02	6.299E-02	>0.50	negligible
Collimator B Ni foil mass (g)	1.157E-02	1.295E-03	>0.50	negligible
Standard concrete thickness (cm)	2.887E-02	-9.680E-04	>0.50	negligible
Standard concrete density (g/cm^3)	1.150E-01	-1.010E+00	0.0158	-1.162E-01
Standard concrete Al content (wf)	5.000E-05	9.027E-01	>0.50	negligible
Standard concrete Ca content (wf)	5.000E-05	-9.912E-02	>0.50	negligible
Standard concrete Cl content (wf)	5.000E-05	2.998E+01	>0.50	negligible
Standard concrete H content (wf)	5.000E-05	-6.818E+01	0.0835	-3.409E-03
Standard concrete Fe content (wf)	5.000E-05	3.217E-01	>0.50	negligible
Standard concrete Mn content (wf)	5.000E-05	4.668E+01	>0.50	negligible
Standard concrete Si content (wf)	5.000E-05	1.109E-01	>0.50	negligible
Lead shield thickness (cm)	2.887E-02	-1.283E-01	0.0072	-3.704E-03
Lead shield density (g/cm^3)	4.500E-02	-1.168E-01	0.0279	-5.257E-03
Lead shield Ni content (wf)	7.550E-07	-1.084E+02	>0.50	negligible
Lead shield Fe content (wf)	2.850E-07	2.382E+02	>0.50	negligible
Lead shield Cr content (wf)	1.625E-08	1.231E+03	>0.50	negligible
Lead shield Bi content (wf)	2.050E-04	-4.386E-02	>0.50	negligible
Lead shield Al content (wf)	8.000E-08	-1.591E+02	>0.50	negligible
Lead shield Ag content (wf)	1.500E-05	-1.348E+00	>0.50	negligible
Total experimental uncertainty absolute (σ_{tot}^d)				1.420E-01
Total experimental uncertainty relative				0.1117

ALARM-TRAN-PB-SHIELD-001

Table I-18. Case 2 collimator B Al_2O_3 TLD experimental uncertainties

Uncertainty source	Uncertainty value (σ_i)	Sensitivity (S_i^d)		σ_i^d
		Value	Unc	
Measurement uncertainty	10.000%			5.500E-02
Number of fissions	6.000%			3.300E-02
SILENE room concrete density (g/cm^3)	2.000E-01	2.526E-03	>0.50	negligible
SILENE room concrete H content (wf)	1.050E-04	-3.802E+00	>0.50	negligible
SILENE room concrete B content (wf)	5.450E-07	-7.920E+02	>0.50	negligible
SILENE assembly wall thickness (cm)	2.887E-02	-6.148E-02	0.3141	-1.775E-03
SILENE assembly wall density (g/cm^3)	4.500E-01	-8.948E-03	0.3981	-4.027E-03
SILENE assembly wall Cr content (wf)	5.774E-03	-1.281E-01	>0.50	negligible
SILENE assembly wall Ni content (wf)	5.774E-03	-1.260E-02	>0.50	negligible
Critical height (cm)	5.000E-04	-7.441E-03	0.0307	-3.720E-06
Solution concentration (g/L)	5.000E-02	-4.700E-03	>0.50	negligible
Solution density (g/cm^3)	5.451E-03	-2.248E-01	>0.50	negligible
Solution uranium enrichment (wf)	1.500E-05	-1.326E-04	>0.50	negligible
Solution temperature (deg C)	1.260E+01	-2.355E-04	>0.50	negligible
Collimator B inner stainless steel thickness (cm)	2.887E-02	-2.319E-02	>0.50	negligible
Collimator B inner stainless steel density (g/cm^3)	3.900E-01	-6.667E-03	>0.50	negligible
Collimator B inner stainless steel Cr content (wf)	5.774E-03	-2.587E-02	>0.50	negligible
Collimator B inner stainless steel Ni content (wf)	5.774E-03	5.318E-01	>0.50	negligible
Collimator B copper thickness (cm)	2.887E-02	1.693E-01	0.1024	4.886E-03
Collimator B copper density (g/cm^3)	4.600E-01	1.452E-02	0.3860	6.678E-03
Collimator B lead thickness (cm)	2.887E-02	-3.087E-02	0.2577	-8.910E-04
Collimator B lead density (g/cm^3)	1.720E-01	-5.362E-03	>0.50	negligible
Collimator B PPB9 density (g/cm^3)	6.282E-02	1.562E-02	>0.50	negligible
Collimator B PPB9 H content (wf)	1.744E-03	1.245E+00	0.4397	2.171E-03
Collimator B PPB9 B content (wf)	6.158E-04	-6.190E+00	0.4946	-3.812E-03
Collimator B X position in room (cm)	1.000E+00	-2.147E-03	0.1348	-2.147E-03
Collimator B Y position in room (cm)	1.000E+00	-1.870E-03	0.1409	-1.870E-03
Collimator B Z position in room (cm)	1.000E+00	-3.678E-04	>0.50	negligible
Collimator B foil holder base thickness (cm)	2.887E-02	1.263E-02	>0.50	negligible
Collimator B foil holder base density (g/cm^3)	3.425E-01	2.267E-02	>0.50	negligible
Collimator B foil holder base Mg content (wf)	2.887E-03	-2.774E-01	>0.50	negligible
Collimator B foil holder back plate thickness (cm)	2.887E-02	-3.000E-02	>0.50	negligible
Collimator B foil holder back plate density (g/cm^3)	3.425E-01	-1.266E-03	>0.50	negligible
Collimator B foil holder back plate Mg content (wf)	2.887E-03	1.517E-01	>0.50	negligible
Collimator B foil holder cover thickness (cm)	2.887E-02	-1.861E-01	>0.50	negligible
Collimator B foil holder cover density (g/cm^3)	3.425E-01	-3.114E-03	>0.50	negligible
Collimator B foil holder cover Mg content (wf)	2.887E-03	-2.018E-01	>0.50	negligible
Standard concrete thickness (cm)	2.887E-02	1.503E-02	>0.50	negligible
Standard concrete density (g/cm^3)	1.150E-01	-4.781E-02	0.3635	-5.498E-03
Standard concrete Al content (wf)	5.000E-05	-4.722E+00	0.1474	-2.361E-04
Standard concrete Ca content (wf)	5.000E-05	2.067E-01	>0.50	negligible
Standard concrete Cl content (wf)	5.000E-05	1.008E+02	>0.50	negligible
Standard concrete H content (wf)	5.000E-05	1.791E+01	0.2883	8.953E-04
Standard concrete Fe content (wf)	5.000E-05	1.072E+00	>0.50	negligible
Standard concrete Mn content (wf)	5.000E-05	3.616E+01	>0.50	negligible
Standard concrete Si content (wf)	5.000E-05	-2.445E-02	>0.50	negligible
Lead shield thickness (cm)	2.887E-02	-1.192E-02	0.0657	-3.441E-04
Lead shield density (g/cm^3)	4.500E-02	-1.162E-02	0.2327	-5.229E-04
Lead shield Ni content (wf)	7.550E-07	-2.251E+02	>0.50	negligible
Lead shield Fe content (wf)	2.850E-07	3.432E+02	>0.50	negligible
Lead shield Cr content (wf)	1.625E-08	3.251E+03	>0.50	negligible
Lead shield Bi content (wf)	2.050E-04	-2.349E-01	>0.50	negligible
Lead shield Al content (wf)	8.000E-08	1.107E+03	>0.50	negligible
Lead shield Ag content (wf)	1.500E-05	-6.137E+00	>0.50	negligible
Total experimental uncertainty absolute (σ_{tot}^d)				6.528E-02
Total experimental uncertainty relative				0.1187

I.3 Case 3 Free Field Location Uncertainties

Table I-19. Case 3 free field $^{59}Co(n,\gamma)^{60}Co$ experimental uncertainties

Uncertainty source	Uncertainty value (σ_i)	Sensitivity (S_i^d)		σ_i^d
		Value	Unc	
Measurement uncertainty	2.233%			1.400E+00
Number of fissions	6.000%			3.762E+00
SILENE room concrete density (g/cm^3)	2.000E-01	-3.848E-01	>0.50	negligible
SILENE room concrete H content (wf)	1.050E-04	1.560E+03	0.1654	1.638E-01
SILENE room concrete B content (wf)	5.450E-07	-1.018E+06	0.1641	-5.546E-01
SILENE assembly wall thickness (cm)	2.887E-02	-1.915E+01	0.0605	-5.528E-01
SILENE assembly wall density (g/cm^3)	4.500E-01	-1.752E+00	0.1338	-7.884E-01
SILENE assembly wall Cr content (wf)	5.774E-03	-9.770E-01	>0.50	negligible
SILENE assembly wall Ni content (wf)	5.774E-03	-3.585E+00	>0.50	negligible
Critical height (cm)	5.000E-04	-1.289E+00	0.0112	-6.446E-04
Solution concentration (g/L)	5.000E-02	-9.288E-01	0.3322	-4.644E-02
Solution density (g/cm^3)	5.451E-03	-4.406E+01	0.1865	-2.402E-01
Solution uranium enrichment (wf)	1.500E-05	-1.500E-01	0.1330	-2.250E-06
Solution temperature (deg C)	1.260E+01	1.742E-02	>0.50	negligible
Free field X position in room (cm)	1.000E+00	1.346E-01	0.1174	1.346E-01
Free field Y position in room (cm)	1.000E+00	2.348E-01	0.0550	2.348E-01
Free field Z position in room (cm)	1.000E+00	-5.967E-02	0.3537	-5.967E-02
Free field foil holder base thickness (cm)	2.887E-02	1.240E+00	>0.50	negligible
Free field foil holder base density (g/cm^3)	3.425E-01	3.197E-01	>0.50	negligible
Free field foil holder base Mg content (wf)	2.887E-03	9.598E-01	>0.50	negligible
Free field foil holder back plate thickness (cm)	2.887E-02	7.100E-01	>0.50	negligible
Free field foil holder back plate density (g/cm^3)	3.425E-01	4.097E-02	>0.50	negligible
Free field foil holder back plate Mg content (wf)	2.887E-03	-3.800E-01	>0.50	negligible
Free field foil holder cover thickness (cm)	2.887E-02	-3.230E+00	>0.50	negligible
Free field foil holder cover density (g/cm^3)	3.425E-01	-3.061E-01	>0.50	negligible
Free field foil holder cover Mg content (wf)	2.887E-03	-5.000E-02	>0.50	negligible
Free field Co foil thickness (cm)	1.155E-02	-1.177E+02	0.0394	-1.359E+00
Free field Co foil radius (cm)	1.443E-02	-5.270E+00	>0.50	negligible
Free field Co foil mass (g)	1.160E-02	-2.899E+00	0.0692	-3.364E-02
Lead shield thickness (cm)	2.887E-02	-1.556E+00	0.0306	-4.493E-02
Lead shield density (g/cm^3)	4.500E-02	-1.354E+00	0.1222	-6.092E-02
Lead shield Ni content (wf)	7.550E-07	2.431E+03	>0.50	negligible
Lead shield Fe content (wf)	2.850E-07	1.037E+04	>0.50	negligible
Lead shield Cr content (wf)	1.625E-08	5.614E+04	>0.50	negligible
Lead shield Bi content (wf)	2.050E-04	-4.820E+00	>0.50	negligible
Lead shield Al content (wf)	8.000E-08	8.189E+03	>0.50	negligible
Lead shield Ag content (wf)	1.500E-05	-7.754E+01	>0.50	negligible
Total experimental uncertainty absolute (σ_{tot}^d)				4.401E+00
Total experimental uncertainty relative				0.0702

ALARM-TRAN-PB-SHIELD-001

Table I-20. Case 3 free field $^{197}Au(n,\gamma)^{198}Au$ experimental uncertainties

Uncertainty source	Uncertainty value (σ_i)	Sensitivity (S_i^d)		σ_i^d
		Value	Unc	
Measurement uncertainty	1.555%			1.000E+03
Number of fissions	6.000%			3.858E+03
SILENE room concrete density (g/cm^3)	2.000E-01	-1.613E+02	>0.50	negligible
SILENE room concrete H content (wf)	1.050E-04	8.534E+05	0.4628	8.961E+01
SILENE room concrete B content (wf)	5.450E-07	-6.916E+08	0.3696	-3.769E+02
SILENE assembly wall thickness (cm)	2.887E-02	-1.635E+04	0.1084	-4.719E+02
SILENE assembly wall density (g/cm^3)	4.500E-01	-1.442E+03	0.2495	-6.487E+02
SILENE assembly wall Cr content (wf)	5.774E-03	7.604E+03	>0.50	negligible
SILENE assembly wall Ni content (wf)	5.774E-03	-8.709E+03	>0.50	negligible
Critical height (cm)	5.000E-04	-1.326E+03	0.0144	-6.630E-01
Solution concentration (g/L)	5.000E-02	-3.495E+02	>0.50	negligible
Solution density (g/cm^3)	5.451E-03	-4.842E+04	0.2605	-2.639E+02
Solution uranium enrichment (wf)	1.500E-05	-1.052E+02	0.2966	-1.578E-03
Solution temperature (deg C)	1.260E+01	6.610E+01	>0.50	negligible
Free field X position in room (cm)	1.000E+00	1.514E+02	0.1475	1.514E+02
Free field Y position in room (cm)	1.000E+00	2.395E+02	0.0761	2.395E+02
Free field Z position in room (cm)	1.000E+00	-7.055E+01	>0.50	negligible
Free field foil holder base thickness (cm)	2.887E-02	2.504E+03	>0.50	negligible
Free field foil holder base density (g/cm^3)	3.425E-01	3.025E+02	>0.50	negligible
Free field foil holder base Mg content (wf)	2.887E-03	4.562E+03	>0.50	negligible
Free field foil holder back plate thickness (cm)	2.887E-02	2.500E+01	>0.50	negligible
Free field foil holder back plate density (g/cm^3)	3.425E-01	1.482E+02	>0.50	negligible
Free field foil holder back plate Mg content (wf)	2.887E-03	-1.490E+03	>0.50	negligible
Free field foil holder cover thickness (cm)	2.887E-02	-1.757E+03	>0.50	negligible
Free field foil holder cover density (g/cm^3)	3.425E-01	-2.008E+02	>0.50	negligible
Free field foil holder cover Mg content (wf)	2.887E-03	-2.810E+03	>0.50	negligible
Free field Au foil thickness (cm)	1.443E-03	-7.317E+05	0.0807	-1.056E+03
Free field Au foil radius (cm)	5.774E-03	-2.146E+03	>0.50	negligible
Free field Au foil mass (g)	3.116E-03	-9.315E+02	0.1565	-2.902E+00
Lead shield thickness (cm)	2.887E-02	-1.374E+03	0.0515	-3.967E+01
Lead shield density (g/cm^3)	4.500E-02	-1.519E+03	0.1670	-6.834E+01
Lead shield Ni content (wf)	7.550E-07	7.265E+06	>0.50	negligible
Lead shield Fe content (wf)	2.850E-07	3.516E+04	>0.50	negligible
Lead shield Cr content (wf)	1.625E-08	-8.443E+07	>0.50	negligible
Lead shield Bi content (wf)	2.050E-04	7.928E+03	>0.50	negligible
Lead shield Al content (wf)	8.000E-08	-5.040E+07	>0.50	negligible
Lead shield Ag content (wf)	1.500E-05	-2.517E+05	>0.50	negligible
Total experimental uncertainty absolute (σ_{tot}^d)				4.237E+03
Total experimental uncertainty relative				0.0659

ALARM-TRAN-PB-SHIELD-001

Table I-21. Case 3 free field $^{115}In(n,\gamma)^{116}In$ experimental uncertainties

Uncertainty source	Uncertainty value (σ_i)	Sensitivity (S_i^d)		σ_i^d
		Value	Unc	
Measurement uncertainty	1.911%			1.500E+05
Number of fissions	6.000%			4.710E+05
SILENE room concrete density (g/cm^3)	2.000E-01	-9.819E+03	>0.50	negligible
SILENE room concrete H content (wf)	1.050E-04	1.357E+08	0.2909	1.425E+04
SILENE room concrete B content (wf)	5.450E-07	-8.068E+10	0.3085	-4.397E+04
SILENE assembly wall thickness (cm)	2.887E-02	-2.069E+06	0.0811	-5.973E+04
SILENE assembly wall density (g/cm^3)	4.500E-01	-1.791E+05	0.2149	-8.059E+04
SILENE assembly wall Cr content (wf)	5.774E-03	-2.316E+05	>0.50	negligible
SILENE assembly wall Ni content (wf)	5.774E-03	-5.394E+05	>0.50	negligible
Critical height (cm)	5.000E-04	-1.525E+05	0.0129	-7.627E+01
Solution concentration (g/L)	5.000E-02	-1.015E+05	0.4418	-5.077E+03
Solution density (g/cm^3)	5.451E-03	-5.730E+06	0.2083	-3.123E+04
Solution uranium enrichment (wf)	1.500E-05	-1.527E+04	0.1951	-2.291E-01
Solution temperature (deg C)	1.260E+01	1.075E+04	>0.50	negligible
Free field X position in room (cm)	1.000E+00	1.508E+04	0.1525	1.508E+04
Free field Y position in room (cm)	1.000E+00	3.044E+04	0.0625	3.044E+04
Free field Z position in room (cm)	1.000E+00	-1.078E+04	0.2764	-1.078E+04
Free field foil holder base thickness (cm)	2.887E-02	4.079E+04	>0.50	negligible
Free field foil holder base density (g/cm^3)	3.425E-01	1.565E+04	>0.50	negligible
Free field foil holder base Mg content (wf)	2.887E-03	1.319E+05	>0.50	negligible
Free field foil holder back plate thickness (cm)	2.887E-02	3.104E+05	>0.50	negligible
Free field foil holder back plate density (g/cm^3)	3.425E-01	1.128E+04	>0.50	negligible
Free field foil holder back plate Mg content (wf)	2.887E-03	9.099E+04	>0.50	negligible
Free field foil holder cover thickness (cm)	2.887E-02	-2.528E+05	>0.50	negligible
Free field foil holder cover density (g/cm^3)	3.425E-01	-4.296E+04	>0.50	negligible
Free field foil holder cover Mg content (wf)	2.887E-03	-9.997E+03	>0.50	negligible
Free field In foil thickness (cm)	5.774E-03	-3.958E+07	0.0358	-2.286E+05
Free field In foil radius (cm)	1.443E-02	-1.844E+05	>0.50	negligible
Free field In foil mass (g)	4.646E-03	-5.782E+05	0.0629	-2.686E+03
Lead shield thickness (cm)	2.887E-02	-1.840E+05	0.0366	-5.311E+03
Lead shield density (g/cm^3)	4.500E-02	-1.902E+05	0.1234	-8.559E+03
Lead shield Ni content (wf)	7.550E-07	2.051E+08	>0.50	negligible
Lead shield Fe content (wf)	2.850E-07	-3.751E+08	>0.50	negligible
Lead shield Cr content (wf)	1.625E-08	1.575E+10	>0.50	negligible
Lead shield Bi content (wf)	2.050E-04	-1.294E+06	>0.50	negligible
Lead shield Al content (wf)	8.000E-08	1.872E+09	>0.50	negligible
Lead shield Ag content (wf)	1.500E-05	-5.315E+06	>0.50	negligible
Total experimental uncertainty absolute (σ_{tot}^d)				5.578E+05
Total experimental uncertainty relative				0.0711

ALARM-TRAN-PB-SHIELD-001

Table I-22. Case 3 free field ^{115}In(n,n'γ)^{115m}In experimental uncertainties

Uncertainty source	Uncertainty value (σ_i)	Sensitivity (S_i^d)		σ_i^d
		Value	Unc	
Measurement uncertainty	1.727%			9.000E+01
Number of fissions	6.000%			3.126E+02
SILENE room concrete density (g/cm^3)	2.000E-01	5.904E+01	>0.50	negligible
SILENE room concrete H content (wf)	1.050E-04	-3.133E+04	>0.50	negligible
SILENE room concrete B content (wf)	5.450E-07	1.624E+06	>0.50	negligible
SILENE assembly wall thickness (cm)	2.887E-02	-6.225E+02	0.1192	-1.797E+01
SILENE assembly wall density (g/cm^3)	4.500E-01	-5.487E+01	0.2740	-2.469E+01
SILENE assembly wall Cr content (wf)	5.774E-03	1.201E+02	>0.50	negligible
SILENE assembly wall Ni content (wf)	5.774E-03	-1.871E+02	>0.50	negligible
Critical height (cm)	5.000E-04	-7.060E+01	0.0123	-3.530E-02
Solution concentration (g/L)	5.000E-02	-4.990E+00	>0.50	negligible
Solution density (g/cm^3)	5.451E-03	-2.681E+03	0.1970	-1.461E+01
Solution uranium enrichment (wf)	1.500E-05	2.834E-01	>0.50	negligible
Solution temperature (deg C)	1.260E+01	-7.093E+00	>0.50	negligible
Free field X position in room (cm)	1.000E+00	1.317E+01	0.0778	1.317E+01
Free field Y position in room (cm)	1.000E+00	2.849E+01	0.0318	2.849E+01
Free field Z position in room (cm)	1.000E+00	-5.520E+00	0.2645	-5.520E+00
Free field foil holder base thickness (cm)	2.887E-02	2.919E+02	0.2546	8.425E+00
Free field foil holder base density (g/cm^3)	3.425E-01	7.537E+01	>0.50	negligible
Free field foil holder base Mg content (wf)	2.887E-03	1.530E+02	>0.50	negligible
Free field foil holder back plate thickness (cm)	2.887E-02	1.325E+02	>0.50	negligible
Free field foil holder back plate density (g/cm^3)	3.425E-01	5.661E+00	>0.50	negligible
Free field foil holder back plate Mg content (wf)	2.887E-03	-2.000E+00	>0.50	negligible
Free field foil holder cover thickness (cm)	2.887E-02	2.607E+02	>0.50	negligible
Free field foil holder cover density (g/cm^3)	3.425E-01	1.680E+01	>0.50	negligible
Free field foil holder cover Mg content (wf)	2.887E-03	-1.500E+01	>0.50	negligible
Free field In foil thickness (cm)	5.774E-03	1.639E+02	>0.50	negligible
Free field In foil radius (cm)	1.443E-02	-5.551E+01	>0.50	negligible
Free field In foil mass (g)	4.646E-03	2.232E+00	>0.50	negligible
Lead shield thickness (cm)	2.887E-02	-2.714E+02	0.0109	-7.834E+00
Lead shield density (g/cm^3)	4.500E-02	-2.529E+02	0.0406	-1.138E+01
Lead shield Ni content (wf)	7.550E-07	1.365E+05	>0.50	negligible
Lead shield Fe content (wf)	2.850E-07	5.614E+04	>0.50	negligible
Lead shield Cr content (wf)	1.625E-08	2.754E+06	>0.50	negligible
Lead shield Bi content (wf)	2.050E-04	-3.780E+01	>0.50	negligible
Lead shield Al content (wf)	8.000E-08	1.350E+06	>0.50	negligible
Lead shield Ag content (wf)	1.500E-05	4.502E+03	>0.50	negligible
Total experimental uncertainty absolute (σ_{tot}^d)				3.290E+02
Total experimental uncertainty relative				0.0631

ALARM-TRAN-PB-SHIELD-001

Table I-23. Case 3 free field $^{56}Fe(n,p)^{56}Mn$ + $^{55}Mn(n,\gamma)^{56}Mn$ experimental uncertainties

Uncertainty source	Uncertainty value (σ_i)	Sensitivity (S_i^d)		σ_i^d
		Value	Unc	
Measurement uncertainty	1.272%			2.650E+01
Number of fissions	6.000%			1.250E+02
SILENE room concrete density (g/cm^3)	2.000E-01	3.769E+01	>0.50	negligible
SILENE room concrete H content (wf)	1.050E-04	4.860E+04	0.2493	5.103E+00
SILENE room concrete B content (wf)	5.450E-07	-4.252E+07	0.1963	-2.317E+01
SILENE assembly wall thickness (cm)	2.887E-02	-6.708E+02	0.0842	-1.936E+01
SILENE assembly wall density (g/cm^3)	4.500E-01	-5.129E+01	0.2235	-2.308E+01
SILENE assembly wall Cr content (wf)	5.774E-03	1.081E+02	>0.50	negligible
SILENE assembly wall Ni content (wf)	5.774E-03	-4.064E+02	>0.50	negligible
Critical height (cm)	5.000E-04	-4.308E+01	0.0159	-2.154E-02
Solution concentration (g/L)	5.000E-02	-2.488E+01	>0.50	negligible
Solution density (g/cm^3)	5.451E-03	-1.747E+03	0.2261	-9.523E+00
Solution uranium enrichment (wf)	1.500E-05	-4.732E+00	0.2069	-7.098E-05
Solution temperature (deg C)	1.260E+01	-1.047E+00	>0.50	negligible
Free field X position in room (cm)	1.000E+00	4.003E+00	0.1968	4.003E+00
Free field Y position in room (cm)	1.000E+00	7.348E+00	0.0819	7.348E+00
Free field Z position in room (cm)	1.000E+00	-3.431E+00	0.2701	-3.431E+00
Free field foil holder base thickness (cm)	2.887E-02	6.238E+01	>0.50	negligible
Free field foil holder base density (g/cm^3)	3.425E-01	2.046E+01	>0.50	negligible
Free field foil holder base Mg content (wf)	2.887E-03	2.265E+02	>0.50	negligible
Free field foil holder back plate thickness (cm)	2.887E-02	-4.757E+01	>0.50	negligible
Free field foil holder back plate density (g/cm^3)	3.425E-01	2.284E+00	>0.50	negligible
Free field foil holder back plate Mg content (wf)	2.887E-03	-8.798E+01	>0.50	negligible
Free field foil holder cover thickness (cm)	2.887E-02	-4.912E+01	>0.50	negligible
Free field foil holder cover density (g/cm^3)	3.425E-01	1.225E+00	>0.50	negligible
Free field foil holder cover Mg content (wf)	2.887E-03	5.790E+01	>0.50	negligible
Free field Fe foil thickness (cm)	1.732E-02	-9.902E+00	>0.50	negligible
Free field Fe foil radius (cm)	1.443E-02	-9.836E+01	>0.50	negligible
Free field Fe foil mass (g)	1.457E-02	-9.902E+00	>0.50	negligible
Free field Fe foil Mn content (wf)	5.000E-05	9.005E+00	>0.50	negligible
Lead shield thickness (cm)	2.887E-02	-5.626E+01	0.0395	-1.624E+00
Lead shield density (g/cm^3)	4.500E-02	-4.921E+01	0.1607	-2.214E+00
Lead shield Ni content (wf)	7.550E-07	-4.555E+05	>0.50	negligible
Lead shield Fe content (wf)	2.850E-07	7.536E+05	>0.50	negligible
Lead shield Cr content (wf)	1.625E-08	-3.350E+06	>0.50	negligible
Lead shield Bi content (wf)	2.050E-04	4.612E+01	>0.50	negligible
Lead shield Al content (wf)	8.000E-08	-4.228E+04	>0.50	negligible
Lead shield Ag content (wf)	1.500E-05	-6.241E+03	>0.50	negligible
Total experimental uncertainty absolute (σ_{tot}^d)				1.341E+02
Total experimental uncertainty relative				0.0644

ALARM-TRAN-PB-SHIELD-001

Table I-24. Case 3 free field $^{24}Mg(n,p)^{24}Na$ experimental uncertainties

Uncertainty source	Uncertainty value (σ_i)	Sensitivity (S_i^d)		σ_i^d
		Value	Unc	
Measurement uncertainty	3.598%			9.500E-01
Number of fissions	6.000%			1.584E+00
SILENE room concrete density (g/cm^3)	2.000E-01	9.641E-02	>0.50	negligible
SILENE room concrete H content (wf)	1.050E-04	6.599E+01	>0.50	negligible
SILENE room concrete B content (wf)	5.450E-07	1.587E+04	>0.50	negligible
SILENE assembly wall thickness (cm)	2.887E-02	-4.277E+00	0.3863	-1.235E-01
SILENE assembly wall density (g/cm^3)	4.500E-01	-2.151E-01	>0.50	negligible
SILENE assembly wall Cr content (wf)	5.774E-03	1.051E+00	>0.50	negligible
SILENE assembly wall Ni content (wf)	5.774E-03	-4.052E-01	>0.50	negligible
Critical height (cm)	5.000E-04	-1.581E-01	0.1234	-7.907E-05
Solution concentration (g/L)	5.000E-02	4.071E-02	>0.50	negligible
Solution density (g/cm^3)	5.451E-03	-1.179E+01	>0.50	negligible
Solution uranium enrichment (wf)	1.500E-05	3.933E-03	>0.50	negligible
Solution temperature (deg C)	1.260E+01	1.905E-02	>0.50	negligible
Free field X position in room (cm)	1.000E+00	9.728E-02	0.1387	9.728E-02
Free field Y position in room (cm)	1.000E+00	1.837E-01	0.0374	1.837E-01
Free field Z position in room (cm)	1.000E+00	-2.477E-02	>0.50	negligible
Free field foil holder base thickness (cm)	2.887E-02	9.398E-02	>0.50	negligible
Free field foil holder base density (g/cm^3)	3.425E-01	1.532E-01	>0.50	negligible
Free field foil holder base Mg content (wf)	2.887E-03	-2.201E-01	>0.50	negligible
Free field foil holder back plate thickness (cm)	2.887E-02	-1.850E-01	>0.50	negligible
Free field foil holder back plate density (g/cm^3)	3.425E-01	-1.750E-02	>0.50	negligible
Free field foil holder back plate Mg content (wf)	2.887E-03	-6.001E-02	>0.50	negligible
Free field foil holder cover thickness (cm)	2.887E-02	-7.705E-01	>0.50	negligible
Free field foil holder cover density (g/cm^3)	3.425E-01	-9.760E-02	>0.50	negligible
Free field foil holder cover Mg content (wf)	2.887E-03	-7.000E-02	>0.50	negligible
Free field Mg foil thickness (cm)	1.155E-02	-5.325E-01	>0.50	negligible
Free field Mg foil radius (cm)	1.443E-02	-2.434E-01	>0.50	negligible
Free field Mg foil mass (g)	2.186E-03	-9.607E-02	>0.50	negligible
Lead shield thickness (cm)	2.887E-02	-2.808E+00	0.0239	-8.107E-02
Lead shield density (g/cm^3)	4.500E-02	-2.567E+00	0.0924	-1.155E-01
Lead shield Ni content (wf)	7.550E-07	-1.503E+03	>0.50	negligible
Lead shield Fe content (wf)	2.850E-07	3.738E+03	>0.50	negligible
Lead shield Cr content (wf)	1.625E-08	1.324E+04	>0.50	negligible
Lead shield Bi content (wf)	2.050E-04	-1.269E+00	>0.50	negligible
Lead shield Al content (wf)	8.000E-08	1.938E+03	>0.50	negligible
Lead shield Ag content (wf)	1.500E-05	-9.330E+00	>0.50	negligible
Total experimental uncertainty absolute (σ_{tot}^d)				1.868E+00
Total experimental uncertainty relative				0.0708

ALARM-TRAN-PB-SHIELD-001

Table I-25. Case 3 free field ^{58}Ni(n,p)^{58}Co experimental uncertainties

Uncertainty source	Uncertainty value (σ_i)	Sensitivity (S_i^d)		σ_i^d
		Value	Unc	
Measurement uncertainty	1.577%			1.000E-01
Number of fissions	6.000%			3.804E-01
SILENE room concrete density (g/cm^3)	2.000E-01	-1.165E-02	>0.50	negligible
SILENE room concrete H content (wf)	1.050E-04	-1.636E+01	>0.50	negligible
SILENE room concrete B content (wf)	5.450E-07	-2.857E+03	>0.50	negligible
SILENE assembly wall thickness (cm)	2.887E-02	-1.039E+00	0.0999	-2.999E-02
SILENE assembly wall density (g/cm^3)	4.500E-01	-9.618E-02	0.2185	-4.328E-02
SILENE assembly wall Cr content (wf)	5.774E-03	-1.505E-01	>0.50	negligible
SILENE assembly wall Ni content (wf)	5.774E-03	-1.350E-02	>0.50	negligible
Critical height (cm)	5.000E-04	-7.291E-02	0.0172	-3.646E-05
Solution concentration (g/L)	5.000E-02	-7.869E-03	>0.50	negligible
Solution density (g/cm^3)	5.451E-03	-4.580E+00	0.1611	-2.496E-02
Solution uranium enrichment (wf)	1.500E-05	2.342E-04	>0.50	negligible
Solution temperature (deg C)	1.260E+01	-2.037E-03	>0.50	negligible
Free field X position in room (cm)	1.000E+00	2.258E-02	0.0478	2.258E-02
Free field Y position in room (cm)	1.000E+00	4.284E-02	0.0210	4.284E-02
Free field Z position in room (cm)	1.000E+00	-6.075E-03	0.2453	-6.075E-03
Free field foil holder base thickness (cm)	2.887E-02	1.484E-01	>0.50	negligible
Free field foil holder base density (g/cm^3)	3.425E-01	5.605E-02	>0.50	negligible
Free field foil holder base Mg content (wf)	2.887E-03	6.799E-02	>0.50	negligible
Free field foil holder back plate thickness (cm)	2.887E-02	1.525E-01	>0.50	negligible
Free field foil holder back plate density (g/cm^3)	3.425E-01	6.145E-03	>0.50	negligible
Free field foil holder back plate Mg content (wf)	2.887E-03	2.400E-02	>0.50	negligible
Free field foil holder cover thickness (cm)	2.887E-02	-4.232E-02	>0.50	negligible
Free field foil holder cover density (g/cm^3)	3.425E-01	1.266E-03	>0.50	negligible
Free field foil holder cover Mg content (wf)	2.887E-03	2.400E-02	>0.50	negligible
Free field Ni foil thickness (cm)	5.774E-03	-5.449E-02	>0.50	negligible
Free field Ni foil radius (cm)	1.443E-02	-2.826E-03	>0.50	negligible
Free field Ni foil mass (g)	5.658E-03	-4.789E-04	>0.50	negligible
Lead shield thickness (cm)	2.887E-02	-5.712E-01	0.0076	-1.649E-02
Lead shield density (g/cm^3)	4.500E-02	-5.398E-01	0.0283	-2.429E-02
Lead shield Ni content (wf)	7.550E-07	-1.735E+02	>0.50	negligible
Lead shield Fe content (wf)	2.850E-07	5.387E+02	>0.50	negligible
Lead shield Cr content (wf)	1.625E-08	-1.031E+03	>0.50	negligible
Lead shield Bi content (wf)	2.050E-04	-3.549E-01	>0.50	negligible
Lead shield Al content (wf)	8.000E-08	-4.689E+02	>0.50	negligible
Lead shield Ag content (wf)	1.500E-05	-4.851E+00	>0.50	negligible
Total experimental uncertainty absolute (σ_{tot}^d)				4.017E-01
Total experimental uncertainty relative				0.0634

ALARM-TRAN-PB-SHIELD-001

Table I-26. Case 3 free field Al_2O_3 TLD experimental uncertainties

Uncertainty source	Uncertainty value (σ_i)	Sensitivity (S_i^d)		σ_i^d
		Value	Unc	
Measurement uncertainty	5.000%			2.810E-02
Number of fissions	6.000%			3.372E-02
SILENE room concrete density (g/cm^3)	2.000E-01	8.271E-04	>0.50	negligible
SILENE room concrete H content (wf)	1.050E-04	6.167E+00	>0.50	negligible
SILENE room concrete B content (wf)	5.450E-07	-4.537E+03	0.3862	-2.473E-03
SILENE assembly wall thickness (cm)	2.887E-02	-3.840E-02	>0.50	negligible
SILENE assembly wall density (g/cm^3)	4.500E-01	-6.371E-03	0.4202	-2.867E-03
SILENE assembly wall Cr content (wf)	5.774E-03	1.900E-02	>0.50	negligible
SILENE assembly wall Ni content (wf)	5.774E-03	-1.451E-03	>0.50	negligible
Critical height (cm)	5.000E-04	-7.184E-03	0.0484	-3.592E-06
Solution concentration (g/L)	5.000E-02	-1.422E-03	>0.50	negligible
Solution density (g/cm^3)	5.451E-03	-2.313E-01	0.4088	-1.261E-03
Solution uranium enrichment (wf)	1.500E-05	-2.576E-04	>0.50	negligible
Solution temperature (deg C)	1.260E+01	-7.762E-04	>0.50	negligible
Free field X position in room (cm)	1.000E+00	6.359E-04	0.2093	6.359E-04
Free field Y position in room (cm)	1.000E+00	1.000E-03	0.1004	1.000E-03
Free field Z position in room (cm)	1.000E+00	-1.881E-04	>0.50	negligible
Free field foil holder base thickness (cm)	2.887E-02	1.517E-02	>0.50	negligible
Free field foil holder base density (g/cm^3)	3.425E-01	3.431E-03	>0.50	negligible
Free field foil holder base Mg content (wf)	2.887E-03	2.201E-02	>0.50	negligible
Free field foil holder back plate thickness (cm)	2.887E-02	4.001E-03	>0.50	negligible
Free field foil holder back plate density (g/cm^3)	3.425E-01	-1.453E-04	>0.50	negligible
Free field foil holder back plate Mg content (wf)	2.887E-03	2.700E-03	>0.50	negligible
Free field foil holder cover thickness (cm)	2.887E-02	8.495E-03	>0.50	negligible
Free field foil holder cover density (g/cm^3)	3.425E-01	5.994E-04	>0.50	negligible
Free field foil holder cover Mg content (wf)	2.887E-03	1.600E-03	>0.50	negligible
Lead shield thickness (cm)	2.887E-02	-1.938E-02	0.0435	-5.594E-04
Lead shield density (g/cm^3)	4.500E-02	-1.761E-02	0.1212	-7.923E-04
Lead shield Ni content (wf)	7.550E-07	3.671E+01	>0.50	negligible
Lead shield Fe content (wf)	2.850E-07	4.132E+01	>0.50	negligible
Lead shield Cr content (wf)	1.625E-08	3.177E+02	>0.50	negligible
Lead shield Bi content (wf)	2.050E-04	1.162E-01	>0.50	negligible
Lead shield Al content (wf)	8.000E-08	-1.464E+02	>0.50	negligible
Lead shield Ag content (wf)	1.500E-05	3.993E-01	>0.50	negligible
Total experimental uncertainty absolute (σ_{tot}^d)				4.410E-02
Total experimental uncertainty relative				0.0785

I.4 Case 4 Scattering Box Position 1 Uncertainties

Table I-27. Case 4 scattering box 1 $^{59}Co(n,\gamma)^{60}Co$ experimental uncertainties

Uncertainty source	Uncertainty value (σ_i)	Sensitivity (S_i^d)		σ_i^d
		Value	Unc	
Measurement uncertainty	2.254%			5.500E-01
Number of fissions	6.000%			1.464E+00
Scattering box plastic bags	2.000%			4.880E-01
SILENE room concrete density (g/cm^3)	2.000E-01	2.233E-01	>0.50	negligible
SILENE room concrete H content (wf)	1.050E-04	-8.907E+01	>0.50	negligible
SILENE room concrete B content (wf)	5.450E-07	-3.503E+05	0.1500	-1.909E-01
SILENE assembly wall thickness (cm)	2.887E-02	-4.263E+00	0.0853	-1.231E-01
SILENE assembly wall density (g/cm^3)	4.500E-01	-3.325E-01	0.2217	-1.496E-01
SILENE assembly wall Cr content (wf)	5.774E-03	-7.203E-01	>0.50	negligible
SILENE assembly wall Ni content (wf)	5.774E-03	-2.852E-01	>0.50	negligible
Critical height (cm)	5.000E-04	-6.642E-01	0.0064	-3.321E-04
Solution concentration (g/L)	5.000E-02	-5.381E-02	>0.50	negligible
Solution density (g/cm^3)	5.451E-03	-1.980E+01	0.1309	-1.079E-01
Solution uranium enrichment (wf)	1.500E-05	-1.607E-02	0.3920	-2.411E-07
Solution temperature (deg C)	1.260E+01	3.051E-02	>0.50	negligible
Scattering box 1 X position in room (cm)	1.000E+00	-2.122E-02	0.2329	-2.122E-02
Scattering box 1 Y position in room (cm)	1.000E+00	-3.254E-02	0.1141	-3.254E-02
Scattering box 1 Z position in room (cm)	1.000E+00	-5.389E-03	>0.50	negligible
Scattering box 1 Al mounting plate thickness (cm)	2.887E-02	-1.371E+00	>0.50	negligible
Scattering box 1 Al mounting plate density (g/cm^3)	3.500E-01	-6.738E-02	>0.50	negligible
Scattering box 1 Co foil thickness (cm)	1.155E-02	-5.276E+01	0.0277	-6.092E-01
Scattering box 1 Co foil radius (cm)	1.443E-02	-2.682E+00	>0.50	negligible
Scattering box 1 Co foil mass (g)	1.161E-02	-1.391E+00	0.0454	-1.615E-02
Scattering box S235JR density (g/cm^3)	4.250E-01	-8.891E-02	>0.50	negligible
Scattering box S235JR Mn content (wf)	3.300E-03	-6.431E-01	>0.50	negligible
Scattering box S235JR C content (wf)	4.007E-04	-3.528E+00	>0.50	negligible
Scattering box S235JR Cu content (wf)	1.296E-03	4.065E+01	>0.50	negligible
Standard concrete thickness (cm)	2.887E-02	-8.600E-03	>0.50	negligible
Standard concrete density (g/cm^3)	1.150E-01	-6.266E-01	0.4049	-7.206E-02
Standard concrete H content (wf)	5.000E-05	1.932E+02	0.4715	9.658E-03
Standard concrete Si content (wf)	5.000E-05	-5.737E+00	0.3920	-2.868E-04
Standard concrete Al content (wf)	5.000E-05	3.214E+00	>0.50	negligible
Standard concrete Fe content (wf)	5.000E-05	-3.771E+01	>0.50	negligible
Standard concrete Cl content (wf)	5.000E-05	-3.482E+03	>0.50	negligible
Standard concrete Ca content (wf)	5.000E-05	-4.864E+00	>0.50	negligible
Standard concrete Mn content (wf)	5.000E-05	3.698E+02	>0.50	negligible
Magnetite concrete thickness (cm)	2.887E-02	3.620E-02	>0.50	negligible
Magnetite concrete density (g/cm^3)	1.950E-01	-1.544E+00	0.0931	-3.012E-01
Magnetite concrete H content (wf)	5.000E-05	4.713E+02	0.3866	2.356E-02
Magnetite concrete Si content (wf)	5.000E-05	1.066E+00	>0.50	negligible
Magnetite concrete Al content (wf)	5.000E-05	-1.615E+01	>0.50	negligible
Magnetite concrete Fe content (wf)	5.000E-05	-1.428E+01	0.0744	-7.138E-04
Magnetite concrete Cl content (wf)	5.000E-05	-2.221E+03	>0.50	negligible
Magnetite concrete Ca content (wf)	5.000E-05	3.348E+00	>0.50	negligible
Magnetite concrete Mn content (wf)	5.000E-05	1.367E+02	>0.50	negligible
Lead shield thickness (cm)	2.887E-02	-3.661E-01	0.0399	-1.057E-02
Lead shield density (g/cm^3)	4.500E-02	-3.871E-01	0.1346	-1.742E-02
Lead shield Ni content (wf)	7.550E-07	2.351E+03	>0.50	negligible
Lead shield Fe content (wf)	2.850E-07	4.950E+03	>0.50	negligible
Lead shield Cr content (wf)	1.625E-08	-2.311E+04	>0.50	negligible
Lead shield Bi content (wf)	2.050E-04	-5.613E-01	>0.50	negligible
Lead shield Al content (wf)	8.000E-08	-9.235E+03	>0.50	negligible
Lead shield Ag content (wf)	1.500E-05	-2.804E+01	>0.50	negligible
Total experimental uncertainty absolute (σ_{tot}^d)				1.800E+00
Total experimental uncertainty relative				0.0738

ALARM-TRAN-PB-SHIELD-001

Table I-28. Case 4 scattering box 1 $^{197}Au(n,\gamma)^{198}Au$ experimental uncertainties

Uncertainty source	Uncertainty value (σ_i)	Sensitivity (S_i^d)		σ_i^d
		Value	Unc	
Measurement uncertainty	1.555%			3.750E+02
Number of fissions	6.000%			1.447E+03
Scattering box plastic bags	2.000%			4.824E+02
SILENE room concrete density (g/cm^3)	2.000E-01	1.419E+01	>0.50	negligible
SILENE room concrete H content (wf)	1.050E-04	-3.054E+05	0.3081	-3.206E+01
SILENE room concrete B content (wf)	5.450E-07	-3.507E+08	0.1796	-1.911E+02
SILENE assembly wall thickness (cm)	2.887E-02	-4.125E+03	0.1055	-1.191E+02
SILENE assembly wall density (g/cm^3)	4.500E-01	-3.566E+02	0.2552	-1.605E+02
SILENE assembly wall Cr content (wf)	5.774E-03	8.915E+02	>0.50	negligible
SILENE assembly wall Ni content (wf)	5.774E-03	2.306E-02	>0.50	negligible
Critical height (cm)	5.000E-04	-6.739E+02	0.0076	-3.370E-01
Solution concentration (g/L)	5.000E-02	-1.008E+02	>0.50	negligible
Solution density (g/cm^3)	5.451E-03	-1.489E+04	0.2012	-8.115E+01
Solution uranium enrichment (wf)	1.500E-05	-1.331E+01	>0.50	negligible
Solution temperature (deg C)	1.260E+01	7.073E+00	>0.50	negligible
Scattering box 1 X position in room (cm)	1.000E+00	-2.742E+01	0.2130	-2.742E+01
Scattering box 1 Y position in room (cm)	1.000E+00	-3.774E+01	0.1169	-3.774E+01
Scattering box 1 Z position in room (cm)	1.000E+00	-1.363E+01	>0.50	negligible
Scattering box 1 Al mounting plate thickness (cm)	2.887E-02	-1.736E+03	>0.50	negligible
Scattering box 1 Al mounting plate density (g/cm^3)	3.500E-01	-3.443E+01	>0.50	negligible
Scattering box 1 Au foil thickness (cm)	1.443E-03	-2.940E+05	0.0477	-4.243E+02
Scattering box 1 Au foil radius (cm)	1.443E-02	-1.125E+03	>0.50	negligible
Scattering box 1 Au foil mass (g)	3.192E-03	-3.768E+02	0.0883	-1.203E+00
Scattering box S235JR density (g/cm^3)	4.250E-01	-1.862E+02	0.4784	-7.914E+01
Scattering box S235JR Mn content (wf)	3.300E-03	1.564E+04	>0.50	negligible
Scattering box S235JR C content (wf)	4.007E-04	7.949E+04	>0.50	negligible
Scattering box S235JR Cu content (wf)	1.296E-03	7.808E+04	>0.50	negligible
Standard concrete thickness (cm)	2.887E-02	-8.900E+00	>0.50	negligible
Standard concrete density (g/cm^3)	1.150E-01	-4.825E+02	>0.50	negligible
Standard concrete H content (wf)	5.000E-05	2.573E+05	0.4245	1.287E+01
Standard concrete Si content (wf)	5.000E-05	-2.144E+03	>0.50	negligible
Standard concrete Al content (wf)	5.000E-05	-4.514E+03	>0.50	negligible
Standard concrete Fe content (wf)	5.000E-05	-2.998E+04	>0.50	negligible
Standard concrete Cl content (wf)	5.000E-05	-6.742E+06	>0.50	negligible
Standard concrete Ca content (wf)	5.000E-05	-8.814E+03	>0.50	negligible
Standard concrete Mn content (wf)	5.000E-05	-3.777E+05	>0.50	negligible
Magnetite concrete thickness (cm)	2.887E-02	8.030E+01	>0.50	negligible
Magnetite concrete density (g/cm^3)	1.950E-01	-2.212E+03	0.0810	-4.314E+02
Magnetite concrete H content (wf)	5.000E-05	-2.403E+05	>0.50	negligible
Magnetite concrete Si content (wf)	5.000E-05	1.716E+02	>0.50	negligible
Magnetite concrete Al content (wf)	5.000E-05	-1.064E+05	>0.50	negligible
Magnetite concrete Fe content (wf)	5.000E-05	-9.233E+03	0.1510	-4.617E-01
Magnetite concrete Cl content (wf)	5.000E-05	-5.077E+06	>0.50	negligible
Magnetite concrete Ca content (wf)	5.000E-05	3.910E+03	>0.50	negligible
Magnetite concrete Mn content (wf)	5.000E-05	-1.624E+05	>0.50	negligible
Lead shield thickness (cm)	2.887E-02	-3.568E+02	0.0472	-1.030E+01
Lead shield density (g/cm^3)	4.500E-02	-3.170E+02	0.1901	-1.427E+01
Lead shield Ni content (wf)	7.550E-07	7.784E+05	>0.50	negligible
Lead shield Fe content (wf)	2.850E-07	7.530E+06	>0.50	negligible
Lead shield Cr content (wf)	1.625E-08	7.243E+07	>0.50	negligible
Lead shield Bi content (wf)	2.050E-04	-3.223E+03	>0.50	negligible
Lead shield Al content (wf)	8.000E-08	-8.245E+06	>0.50	negligible
Lead shield Ag content (wf)	1.500E-05	8.278E+03	>0.50	negligible
Total experimental uncertainty absolute (σ_{tot}^d)				1.711E+03
Total experimental uncertainty relative				0.0709

ALARM-TRAN-PB-SHIELD-001

Table I-29. Case 4 scattering box 1 $^{115}In(n,\gamma)^{116}In$ experimental uncertainties

Uncertainty source	Uncertainty value (σ_i)	Sensitivity (S_i^d)		σ_i^d
		Value	Unc	
Measurement uncertainty	2.234%			6.500E+04
Number of fissions	6.000%			1.746E+05
Scattering box plastic bags	2.000%			5.820E+04
SILENE room concrete density (g/cm^3)	2.000E-01	-1.943E+04	>0.50	negligible
SILENE room concrete H content (wf)	1.050E-04	-2.773E+07	0.3493	-2.911E+03
SILENE room concrete B content (wf)	5.450E-07	-4.274E+10	0.1463	-2.329E+04
SILENE assembly wall thickness (cm)	2.887E-02	-5.526E+05	0.0785	-1.595E+04
SILENE assembly wall density (g/cm^3)	4.500E-01	-4.703E+04	0.1864	-2.116E+04
SILENE assembly wall Cr content (wf)	5.774E-03	-1.949E+05	>0.50	negligible
SILENE assembly wall Ni content (wf)	5.774E-03	-2.986E+05	>0.50	negligible
Critical height (cm)	5.000E-04	-7.963E+04	0.0066	-3.981E+01
Solution concentration (g/L)	5.000E-02	-1.184E+04	>0.50	negligible
Solution density (g/cm^3)	5.451E-03	-2.355E+06	0.1310	-1.284E+04
Solution uranium enrichment (wf)	1.500E-05	-1.764E+03	0.4251	-2.645E-02
Solution temperature (deg C)	1.260E+01	-1.253E+03	>0.50	negligible
Scattering box 1 X position in room (cm)	1.000E+00	-3.314E+03	0.1844	-3.314E+03
Scattering box 1 Y position in room (cm)	1.000E+00	-3.876E+03	0.1185	-3.876E+03
Scattering box 1 Z position in room (cm)	1.000E+00	-2.371E+03	0.3482	-2.371E+03
Scattering box 1 Al mounting plate thickness (cm)	2.887E-02	2.628E+05	>0.50	negligible
Scattering box 1 Al mounting plate density (g/cm^3)	3.500E-01	-1.403E+04	>0.50	negligible
Scattering box 1 In foil thickness (cm)	5.774E-03	-1.665E+07	0.0209	-9.615E+04
Scattering box 1 In foil radius (cm)	1.443E-02	-1.841E+05	>0.50	negligible
Scattering box 1 In foil mass (g)	4.656E-03	-2.526E+05	0.0371	-1.176E+03
Scattering box S235JR density (g/cm^3)	4.250E-01	-4.036E+03	>0.50	negligible
Scattering box S235JR Mn content (wf)	3.300E-03	-2.785E+05	>0.50	negligible
Scattering box S235JR C content (wf)	4.007E-04	4.144E+06	>0.50	negligible
Scattering box S235JR Cu content (wf)	1.296E-03	-8.891E+06	>0.50	negligible
Standard concrete thickness (cm)	2.887E-02	8.460E+03	>0.50	negligible
Standard concrete density (g/cm^3)	1.150E-01	-6.664E+04	0.4522	-7.664E+03
Standard concrete H content (wf)	5.000E-05	2.584E+07	0.4190	1.292E+03
Standard concrete Si content (wf)	5.000E-05	-6.252E+05	0.4102	-3.126E+01
Standard concrete Al content (wf)	5.000E-05	-1.636E+06	>0.50	negligible
Standard concrete Fe content (wf)	5.000E-05	-4.511E+06	>0.50	negligible
Standard concrete Cl content (wf)	5.000E-05	7.007E+07	>0.50	negligible
Standard concrete Ca content (wf)	5.000E-05	-1.666E+05	>0.50	negligible
Standard concrete Mn content (wf)	5.000E-05	1.585E+08	>0.50	negligible
Magnetite concrete thickness (cm)	2.887E-02	1.385E+04	>0.50	negligible
Magnetite concrete density (g/cm^3)	1.950E-01	-2.660E+05	0.0668	-5.188E+04
Magnetite concrete H content (wf)	5.000E-05	-3.212E+06	>0.50	negligible
Magnetite concrete Si content (wf)	5.000E-05	2.179E+06	>0.50	negligible
Magnetite concrete Al content (wf)	5.000E-05	8.081E+05	>0.50	negligible
Magnetite concrete Fe content (wf)	5.000E-05	-1.319E+06	0.0956	-6.596E+01
Magnetite concrete Cl content (wf)	5.000E-05	-1.477E+09	>0.50	negligible
Magnetite concrete Ca content (wf)	5.000E-05	-7.518E+05	>0.50	negligible
Magnetite concrete Mn content (wf)	5.000E-05	-3.194E+07	>0.50	negligible
Lead shield thickness (cm)	2.887E-02	-4.432E+04	0.0391	-1.279E+03
Lead shield density (g/cm^3)	4.500E-02	-4.939E+04	0.1255	-2.223E+03
Lead shield Ni content (wf)	7.550E-07	2.782E+07	>0.50	negligible
Lead shield Fe content (wf)	2.850E-07	-1.612E+08	>0.50	negligible
Lead shield Cr content (wf)	1.625E-08	-6.466E+08	>0.50	negligible
Lead shield Bi content (wf)	2.050E-04	-1.987E+05	>0.50	negligible
Lead shield Al content (wf)	8.000E-08	-8.528E+08	>0.50	negligible
Lead shield Ag content (wf)	1.500E-05	1.135E+06	>0.50	negligible
Total experimental uncertainty absolute (σ_{tot}^d)				2.271E+05
Total experimental uncertainty relative				0.0780

ALARM-TRAN-PB-SHIELD-001

Table I-30. Case 4 scattering box 1 ^{115}In(n,n'γ)^{115m}In experimental uncertainties

Uncertainty source	Uncertainty value (σ_i)	Sensitivity (S_i^d)		σ_i^d
		Value	Unc	
Measurement uncertainty	1.703%			5.500E+00
Number of fissions	6.000%			1.938E+01
Scattering box plastic bags	2.000%			6.460E+00
SILENE room concrete density (g/cm^3)	2.000E-01	5.564E+00	>0.50	negligible
SILENE room concrete H content (wf)	1.050E-04	-4.715E+03	0.4283	-4.951E-01
SILENE room concrete B content (wf)	5.450E-07	3.933E+05	>0.50	negligible
SILENE assembly wall thickness (cm)	2.887E-02	-4.936E+01	0.1869	-1.425E+00
SILENE assembly wall density (g/cm^3)	4.500E-01	-4.976E+00	0.3759	-2.239E+00
SILENE assembly wall Cr content (wf)	5.774E-03	-3.027E+01	>0.50	negligible
SILENE assembly wall Ni content (wf)	5.774E-03	1.180E+01	>0.50	negligible
Critical height (cm)	5.000E-04	-4.994E+00	0.0224	-2.497E-03
Solution concentration (g/L)	5.000E-02	-1.275E+00	>0.50	negligible
Solution density (g/cm^3)	5.451E-03	-1.510E+02	0.4349	-8.232E-01
Solution uranium enrichment (wf)	1.500E-05	2.523E-02	>0.50	negligible
Solution temperature (deg C)	1.260E+01	-3.747E-01	>0.50	negligible
Scattering box 1 X position in room (cm)	1.000E+00	-6.913E-01	0.1375	-6.913E-01
Scattering box 1 Y position in room (cm)	1.000E+00	-9.460E-01	0.0761	-9.460E-01
Scattering box 1 Z position in room (cm)	1.000E+00	-7.205E-01	0.2249	-7.205E-01
Scattering box 1 Al mounting plate thickness (cm)	2.887E-02	-3.645E+00	>0.50	negligible
Scattering box 1 Al mounting plate density (g/cm^3)	3.500E-01	1.173E+00	>0.50	negligible
Scattering box 1 In foil thickness (cm)	5.774E-03	-4.036E+01	>0.50	negligible
Scattering box 1 In foil radius (cm)	1.443E-02	-1.225E+01	>0.50	negligible
Scattering box 1 In foil mass (g)	4.656E-03	-2.107E-01	>0.50	negligible
Scattering box S235JR density (g/cm^3)	4.250E-01	3.734E-01	>0.50	negligible
Scattering box S235JR Mn content (wf)	3.300E-03	2.258E+02	>0.50	negligible
Scattering box S235JR C content (wf)	4.007E-04	1.508E+03	>0.50	negligible
Scattering box S235JR Cu content (wf)	1.296E-03	7.095E+02	>0.50	negligible
Standard concrete thickness (cm)	2.887E-02	1.305E+00	>0.50	negligible
Standard concrete density (g/cm^3)	1.150E-01	-7.792E+00	>0.50	negligible
Standard concrete H content (wf)	5.000E-05	-4.919E+03	0.4618	-2.460E-01
Standard concrete Si content (wf)	5.000E-05	1.304E+01	>0.50	negligible
Standard concrete Al content (wf)	5.000E-05	9.379E+01	>0.50	negligible
Standard concrete Fe content (wf)	5.000E-05	1.227E+02	>0.50	negligible
Standard concrete Cl content (wf)	5.000E-05	6.799E+04	>0.50	negligible
Standard concrete Ca content (wf)	5.000E-05	-9.450E+01	>0.50	negligible
Standard concrete Mn content (wf)	5.000E-05	6.299E+03	>0.50	negligible
Magnetite concrete thickness (cm)	2.887E-02	3.899E+00	0.3719	1.126E-01
Magnetite concrete density (g/cm^3)	1.950E-01	-1.347E+02	0.0281	-2.626E+01
Magnetite concrete H content (wf)	5.000E-05	-3.368E+04	0.1366	-1.684E+00
Magnetite concrete Si content (wf)	5.000E-05	3.231E+02	>0.50	negligible
Magnetite concrete Al content (wf)	5.000E-05	2.783E+03	>0.50	negligible
Magnetite concrete Fe content (wf)	5.000E-05	2.594E+02	0.1003	1.297E-02
Magnetite concrete Cl content (wf)	5.000E-05	1.017E+05	>0.50	negligible
Magnetite concrete Ca content (wf)	5.000E-05	3.658E+02	>0.50	negligible
Magnetite concrete Mn content (wf)	5.000E-05	-6.875E+03	>0.50	negligible
Lead shield thickness (cm)	2.887E-02	-2.429E+01	0.0154	-7.012E-01
Lead shield density (g/cm^3)	4.500E-02	-2.265E+01	0.0562	-1.019E+00
Lead shield Ni content (wf)	7.550E-07	5.927E+04	>0.50	negligible
Lead shield Fe content (wf)	2.850E-07	-1.755E+03	>0.50	negligible
Lead shield Cr content (wf)	1.625E-08	-5.353E+05	>0.50	negligible
Lead shield Bi content (wf)	2.050E-04	4.316E+00	>0.50	negligible
Lead shield Al content (wf)	8.000E-08	-2.190E+03	>0.50	negligible
Lead shield Ag content (wf)	1.500E-05	-1.161E+03	>0.50	negligible
Total experimental uncertainty absolute (σ_{tot}^d)				3.393E+01
Total experimental uncertainty relative				0.1050

ALARM-TRAN-PB-SHIELD-001

Table I-31. Case 4 scattering box 1 $^{56}Fe(n,p)^{56}Mn$ + $^{55}Mn(n,\gamma)^{56}Mn$ experimental uncertainties

Uncertainty source	Uncertainty value (σ_i)	Sensitivity (S_i^d)		σ_i^d
		Value	Unc	
Measurement uncertainty	1.249%			1.100E+01
Number of fissions	6.000%			5.286E+01
Scattering box plastic bags	2.000%			1.762E+01
SILENE room concrete density (g/cm^3)	2.000E-01	-6.597E+00	>0.50	negligible
SILENE room concrete H content (wf)	1.050E-04	3.399E+03	>0.50	negligible
SILENE room concrete B content (wf)	5.450E-07	-1.408E+07	0.1605	-7.675E+00
SILENE assembly wall thickness (cm)	2.887E-02	-1.496E+02	0.1079	-4.318E+00
SILENE assembly wall density (g/cm^3)	4.500E-01	-1.472E+01	0.2155	-6.625E+00
SILENE assembly wall Cr content (wf)	5.774E-03	1.101E+02	>0.50	negligible
SILENE assembly wall Ni content (wf)	5.774E-03	-9.995E+01	>0.50	negligible
Critical height (cm)	5.000E-04	-2.349E+01	0.0081	-1.175E-02
Solution concentration (g/L)	5.000E-02	-1.273E+00	>0.50	negligible
Solution density (g/cm^3)	5.451E-03	-5.668E+02	0.1962	-3.090E+00
Solution uranium enrichment (wf)	1.500E-05	-2.007E-01	>0.50	negligible
Solution temperature (deg C)	1.260E+01	-3.739E-01	>0.50	negligible
Scattering box 1 X position in room (cm)	1.000E+00	-6.347E-01	0.2726	-6.347E-01
Scattering box 1 Y position in room (cm)	1.000E+00	-1.183E+00	0.1200	-1.183E+00
Scattering box 1 Z position in room (cm)	1.000E+00	-4.138E-01	>0.50	negligible
Scattering box 1 Al mounting plate thickness (cm)	2.887E-02	-2.084E+01	>0.50	negligible
Scattering box 1 Al mounting plate density (g/cm^3)	3.500E-01	-3.702E+00	>0.50	negligible
Scattering box 1 Fe foil thickness (cm)	1.732E-02	-1.617E+02	0.2611	-2.800E+00
Scattering box 1 Fe foil radius (cm)	1.443E-02	-5.390E+01	>0.50	negligible
Scattering box 1 Fe foil mass (g)	1.461E-02	-1.048E+01	0.3090	-1.531E-01
Scattering box 1 Fe foil Mn content (wf)	5.000E-05	9.788E-01	>0.50	negligible
Scattering box S235JR density (g/cm^3)	4.250E-01	-4.051E+00	>0.50	negligible
Scattering box S235JR Mn content (wf)	3.300E-03	1.936E+02	>0.50	negligible
Scattering box S235JR C content (wf)	4.007E-04	4.155E+02	>0.50	negligible
Scattering box S235JR Cu content (wf)	1.296E-03	-2.758E+03	>0.50	negligible
Standard concrete thickness (cm)	2.887E-02	-2.270E+00	>0.50	negligible
Standard concrete density (g/cm^3)	1.150E-01	-2.522E+01	0.4314	-2.900E+00
Standard concrete H content (wf)	5.000E-05	1.413E+04	0.2770	7.067E-01
Standard concrete Si content (wf)	5.000E-05	-2.667E+02	0.3481	-1.333E-02
Standard concrete Al content (wf)	5.000E-05	6.193E+01	>0.50	negligible
Standard concrete Fe content (wf)	5.000E-05	-3.489E+02	>0.50	negligible
Standard concrete Cl content (wf)	5.000E-05	-7.938E+03	>0.50	negligible
Standard concrete Ca content (wf)	5.000E-05	-3.523E+02	>0.50	negligible
Standard concrete Mn content (wf)	5.000E-05	4.630E+04	>0.50	negligible
Magnetite concrete thickness (cm)	2.887E-02	1.450E+00	>0.50	negligible
Magnetite concrete density (g/cm^3)	1.950E-01	-5.761E+01	0.1116	-1.123E+01
Magnetite concrete H content (wf)	5.000E-05	1.966E+04	0.3977	9.830E-01
Magnetite concrete Si content (wf)	5.000E-05	-5.407E+02	>0.50	negligible
Magnetite concrete Al content (wf)	5.000E-05	1.106E+04	0.4976	5.528E-01
Magnetite concrete Fe content (wf)	5.000E-05	-4.063E+02	0.1123	-2.031E-02
Magnetite concrete Cl content (wf)	5.000E-05	6.707E+04	>0.50	negligible
Magnetite concrete Ca content (wf)	5.000E-05	-4.274E+02	>0.50	negligible
Magnetite concrete Mn content (wf)	5.000E-05	6.235E+03	>0.50	negligible
Lead shield thickness (cm)	2.887E-02	-1.332E+01	0.0470	-3.845E-01
Lead shield density (g/cm^3)	4.500E-02	-1.038E+01	0.2158	-4.670E-01
Lead shield Ni content (wf)	7.550E-07	1.249E+03	>0.50	negligible
Lead shield Fe content (wf)	2.850E-07	3.291E+05	>0.50	negligible
Lead shield Cr content (wf)	1.625E-08	-2.822E+06	>0.50	negligible
Lead shield Bi content (wf)	2.050E-04	2.051E+02	>0.50	negligible
Lead shield Al content (wf)	8.000E-08	-2.066E+05	>0.50	negligible
Lead shield Ag content (wf)	1.500E-05	2.150E+03	>0.50	negligible
Total experimental uncertainty absolute (σ_{tot}^d)				5.919E+01
Total experimental uncertainty relative				0.0672

ALARM-TRAN-PB-SHIELD-001

Table I-32. Case 4 scattering box 1 $^{24}Mg(n,p)^{24}Na$ experimental uncertainties

Uncertainty source	Uncertainty value (σ_i)	Sensitivity (S_i^d)		σ_i^d
		Value	Unc	
Measurement uncertainty	3.151%			3.800E-02
Number of fissions	6.000%			7.236E-02
Scattering box plastic bags	2.000%			2.412E-02
SILENE room concrete density (g/cm^3)	2.000E-01	4.887E-03	>0.50	negligible
SILENE room concrete H content (wf)	1.050E-04	-4.823E+00	>0.50	negligible
SILENE room concrete B content (wf)	5.450E-07	-3.242E+03	>0.50	negligible
SILENE assembly wall thickness (cm)	2.887E-02	-2.774E-01	0.3116	-8.009E-03
SILENE assembly wall density (g/cm^3)	4.500E-01	-2.082E-02	>0.50	negligible
SILENE assembly wall Cr content (wf)	5.774E-03	-1.904E-01	>0.50	negligible
SILENE assembly wall Ni content (wf)	5.774E-03	1.052E-02	>0.50	negligible
Critical height (cm)	5.000E-04	-8.156E-03	0.1285	-4.078E-06
Solution concentration (g/L)	5.000E-02	3.688E-03	>0.50	negligible
Solution density (g/cm^3)	5.451E-03	-1.745E+00	0.3635	-9.514E-03
Solution uranium enrichment (wf)	1.500E-05	-2.653E-04	>0.50	negligible
Solution temperature (deg C)	1.260E+01	7.390E-04	>0.50	negligible
Scattering box 1 X position in room (cm)	1.000E+00	-3.117E-03	0.1969	-3.117E-03
Scattering box 1 Y position in room (cm)	1.000E+00	-4.840E-03	0.0796	-4.840E-03
Scattering box 1 Z position in room (cm)	1.000E+00	-4.092E-04	>0.50	negligible
Scattering box 1 Al mounting plate thickness (cm)	2.887E-02	-1.237E-01	>0.50	negligible
Scattering box 1 Al mounting plate density (g/cm^3)	3.500E-01	-1.149E-02	>0.50	negligible
Scattering box 1 Mg foil thickness (cm)	5.774E-02	-5.084E-02	>0.50	negligible
Scattering box 1 Mg foil radius (cm)	1.443E-02	3.248E-02	>0.50	negligible
Scattering box 1 Mg foil mass (g)	1.322E-02	-1.983E-02	>0.50	negligible
Scattering box S235JR density (g/cm^3)	4.250E-01	1.106E-02	>0.50	negligible
Scattering box S235JR Mn content (wf)	3.300E-03	-1.802E+00	>0.50	negligible
Scattering box S235JR C content (wf)	4.007E-04	1.210E+01	>0.50	negligible
Scattering box S235JR Cu content (wf)	1.296E-03	1.010E+00	>0.50	negligible
Standard concrete thickness (cm)	2.887E-02	7.340E-03	>0.50	negligible
Standard concrete density (g/cm^3)	1.150E-01	-1.720E-02	>0.50	negligible
Standard concrete H content (wf)	5.000E-05	-1.364E+01	>0.50	negligible
Standard concrete Si content (wf)	5.000E-05	-6.852E-02	>0.50	negligible
Standard concrete Al content (wf)	5.000E-05	8.079E-02	>0.50	negligible
Standard concrete Fe content (wf)	5.000E-05	-1.090E+00	>0.50	negligible
Standard concrete Cl content (wf)	5.000E-05	9.996E+00	>0.50	negligible
Standard concrete Ca content (wf)	5.000E-05	-1.999E-02	>0.50	negligible
Standard concrete Mn content (wf)	5.000E-05	7.821E+01	>0.50	negligible
Magnetite concrete thickness (cm)	2.887E-02	7.290E-03	>0.50	negligible
Magnetite concrete density (g/cm^3)	1.950E-01	-7.075E-01	0.0507	-1.380E-01
Magnetite concrete H content (wf)	5.000E-05	-2.654E+01	>0.50	negligible
Magnetite concrete Si content (wf)	5.000E-05	3.109E+00	>0.50	negligible
Magnetite concrete Al content (wf)	5.000E-05	2.222E-01	>0.50	negligible
Magnetite concrete Fe content (wf)	5.000E-05	1.591E+00	0.1574	7.954E-05
Magnetite concrete Cl content (wf)	5.000E-05	-5.544E+02	>0.50	negligible
Magnetite concrete Ca content (wf)	5.000E-05	-4.163E-01	>0.50	negligible
Magnetite concrete Mn content (wf)	5.000E-05	3.327E+01	>0.50	negligible
Lead shield thickness (cm)	2.887E-02	-1.368E-01	0.0257	-3.948E-03
Lead shield density (g/cm^3)	4.500E-02	-1.231E-01	0.1005	-5.541E-03
Lead shield Ni content (wf)	7.550E-07	-1.051E+02	>0.50	negligible
Lead shield Fe content (wf)	2.850E-07	-5.824E+02	>0.50	negligible
Lead shield Cr content (wf)	1.625E-08	1.001E+03	>0.50	negligible
Lead shield Bi content (wf)	2.050E-04	2.720E-01	>0.50	negligible
Lead shield Al content (wf)	8.000E-08	-9.685E+02	>0.50	negligible
Lead shield Ag content (wf)	1.500E-05	3.335E+00	>0.50	negligible
Total experimental uncertainty absolute (σ_{tot}^d)				1.629E-01
Total experimental uncertainty relative				0.1351

ALARM-TRAN-PB-SHIELD-001

Table I-33. Case 4 scattering box 1 ^{58}Ni(n,p)^{58}Co experimental uncertainties

Uncertainty source	Uncertainty value (σ_i)	Sensitivity (S_i^d)		σ_i^d
		Value	Unc	
Measurement uncertainty	2.012%			6.500E-03
Number of fissions	6.000%			1.938E-02
Scattering box plastic bags	2.000%			6.460E-03
SILENE room concrete density (g/cm^3)	2.000E-01	5.690E-03	>0.50	negligible
SILENE room concrete H content (wf)	1.050E-04	-4.459E+00	>0.50	negligible
SILENE room concrete B content (wf)	5.450E-07	3.743E+02	>0.50	negligible
SILENE assembly wall thickness (cm)	2.887E-02	-7.438E-02	0.1386	-2.147E-03
SILENE assembly wall density (g/cm^3)	4.500E-01	-8.133E-03	0.2565	-3.660E-03
SILENE assembly wall Cr content (wf)	5.774E-03	-3.503E-02	>0.50	negligible
SILENE assembly wall Ni content (wf)	5.774E-03	-5.922E-02	>0.50	negligible
Critical height (cm)	5.000E-04	-4.694E-03	0.0267	-2.347E-06
Solution concentration (g/L)	5.000E-02	-9.186E-04	>0.50	negligible
Solution density (g/cm^3)	5.451E-03	-3.054E-01	0.2444	-1.665E-03
Solution uranium enrichment (wf)	1.500E-05	-5.613E-05	>0.50	negligible
Solution temperature (deg C)	1.260E+01	-1.320E-04	>0.50	negligible
Scattering box 1 X position in room (cm)	1.000E+00	-9.357E-04	0.0972	-9.357E-04
Scattering box 1 Y position in room (cm)	1.000E+00	-1.239E-03	0.0557	-1.239E-03
Scattering box 1 Z position in room (cm)	1.000E+00	-2.058E-04	>0.50	negligible
Scattering box 1 Al mounting plate thickness (cm)	2.887E-02	-2.189E-02	>0.50	negligible
Scattering box 1 Al mounting plate density (g/cm^3)	3.500E-01	-1.036E-04	>0.50	negligible
Scattering box 1 Ni foil thickness (cm)	1.155E-02	-3.970E-02	>0.50	negligible
Scattering box 1 Ni foil radius (cm)	1.443E-02	3.597E-02	>0.50	negligible
Scattering box 1 Ni foil mass (g)	1.159E-02	-8.044E-04	>0.50	negligible
Scattering box S235JR density (g/cm^3)	4.250E-01	1.054E-03	>0.50	negligible
Scattering box S235JR Mn content (wf)	3.300E-03	7.042E-01	>0.50	negligible
Scattering box S235JR C content (wf)	4.007E-04	-4.938E-01	>0.50	negligible
Scattering box S235JR Cu content (wf)	1.296E-03	2.732E-03	>0.50	negligible
Standard concrete thickness (cm)	2.887E-02	2.290E-04	>0.50	negligible
Standard concrete density (g/cm^3)	1.150E-01	-5.106E-03	>0.50	negligible
Standard concrete H content (wf)	5.000E-05	-2.080E+00	>0.50	negligible
Standard concrete Si content (wf)	5.000E-05	-1.622E-02	>0.50	negligible
Standard concrete Al content (wf)	5.000E-05	-5.772E-02	>0.50	negligible
Standard concrete Fe content (wf)	5.000E-05	-1.574E-01	>0.50	negligible
Standard concrete Cl content (wf)	5.000E-05	-1.430E+02	>0.50	negligible
Standard concrete Ca content (wf)	5.000E-05	-2.539E-01	>0.50	negligible
Standard concrete Mn content (wf)	5.000E-05	-1.026E+01	>0.50	negligible
Magnetite concrete thickness (cm)	2.887E-02	-1.190E-04	>0.50	negligible
Magnetite concrete density (g/cm^3)	1.950E-01	-1.859E-01	0.0228	-3.626E-02
Magnetite concrete H content (wf)	5.000E-05	-3.111E+01	0.1690	-1.556E-03
Magnetite concrete Si content (wf)	5.000E-05	-4.229E-01	>0.50	negligible
Magnetite concrete Al content (wf)	5.000E-05	1.017E+00	>0.50	negligible
Magnetite concrete Fe content (wf)	5.000E-05	2.377E-01	0.1262	1.188E-05
Magnetite concrete Cl content (wf)	5.000E-05	1.018E+01	>0.50	negligible
Magnetite concrete Ca content (wf)	5.000E-05	-1.341E-01	>0.50	negligible
Magnetite concrete Mn content (wf)	5.000E-05	7.379E+00	>0.50	negligible
Lead shield thickness (cm)	2.887E-02	-3.657E-02	0.0116	-1.056E-03
Lead shield density (g/cm^3)	4.500E-02	-3.244E-02	0.0463	-1.460E-03
Lead shield Ni content (wf)	7.550E-07	-4.767E+01	>0.50	negligible
Lead shield Fe content (wf)	2.850E-07	7.387E+01	>0.50	negligible
Lead shield Cr content (wf)	1.625E-08	-8.763E+01	>0.50	negligible
Lead shield Bi content (wf)	2.050E-04	7.925E-03	>0.50	negligible
Lead shield Al content (wf)	8.000E-08	-7.122E+01	>0.50	negligible
Lead shield Ag content (wf)	1.500E-05	-9.915E-01	>0.50	negligible
Total experimental uncertainty absolute (σ_{tot}^d)				4.246E-02
Total experimental uncertainty relative				0.1315

ALARM-TRAN-PB-SHIELD-001

I.5 Case 5 scattering Box Position 2 Uncertainties

Table I-34. Case 5 scattering box 2 $^{59}Co(n,\gamma)^{60}Co$ experimental uncertainties

Uncertainty source	Uncertainty value (σ_i)	Sensitivity (S_i^d)		σ_i^d
		Value	Unc	
Measurement uncertainty	2.135%			6.000E-01
Number of fissions	6.000%			1.686E+00
Scattering box plastic bags	2.000%			5.620E-01
SILENE room concrete density (g/cm^3)	2.000E-01	-1.761E-01	>0.50	negligible
SILENE room concrete H content (wf)	1.050E-04	-1.140E+02	>0.50	negligible
SILENE room concrete B content (wf)	5.450E-07	-4.121E+05	9.632E-02	-2.246E-01
SILENE assembly wall thickness (cm)	2.887E-02	-4.847E+00	5.322E-02	-1.399E-01
SILENE assembly wall density (g/cm^3)	4.500E-01	-4.634E-01	0.1128	-2.085E-01
SILENE assembly wall Cr content (wf)	5.774E-03	7.080E-02	>0.50	negligible
SILENE assembly wall Ni content (wf)	5.774E-03	-5.698E-01	>0.50	negligible
Critical height (cm)	5.000E-04	-8.477E-01	4.001E-03	-4.238E-04
Solution concentration (g/L)	5.000E-02	-1.270E-01	>0.50	negligible
Solution density (g/cm^3)	5.451E-03	-2.465E+01	0.0744	-1.344E-01
Solution uranium enrichment (wf)	1.500E-05	-1.935E-02	2.454E-01	-2.902E-07
Solution temperature (deg C)	1.260E+01	-3.305E-02	>0.50	negligible
Scattering box 2 X position in room (cm)	1.000E+00	-1.346E-02	0.2641	-1.346E-02
Scattering box 2 Y position in room (cm)	1.000E+00	-2.274E-02	1.477E-01	-2.274E-02
Scattering box 2 Z position in room (cm)	1.000E+00	-6.965E-03	>0.50	negligible
Scattering box 2 block orientation (deg)	1.000E+00	-2.535E-02	>0.50	negligible
Scattering box 2 Al mounting plate thickness (cm)	2.887E-02	1.066E-01	>0.50	negligible
Scattering box 2 Al mounting plate density (g/cm^3)	3.500E-01	-1.281E-01	>0.50	negligible
Scattering box 2 Co foil thickness (cm)	1.155E-02	-6.037E+01	1.713E-02	-6.971E-01
Scattering box 2 Co foil radius (cm)	1.443E-02	-2.950E+00	>0.50	negligible
Scattering box 2 Co foil mass (g)	1.161E-02	-1.607E+00	2.783E-02	-1.866E-02
Scattering box S235JR density (g/cm^3)	4.250E-01	-1.190E-01	4.711E-01	-5.058E-02
Scattering box S235JR Mn content (wf)	3.300E-03	-2.872E+01	>0.50	negligible
Scattering box S235JR C content (wf)	4.007E-04	-7.497E+01	>0.50	negligible
Scattering box S235JR Cu content (wf)	1.296E-03	4.911E+00	>0.50	negligible
Standard concrete thickness (cm)	2.887E-02	1.760E-02	>0.50	negligible
Standard concrete density (g/cm^3)	1.150E-01	-1.505E+00	1.269E-01	-1.731E-01
Standard concrete H content (wf)	5.000E-05	3.421E+02	2.006E-01	1.711E-02
Standard concrete Si content (wf)	5.000E-05	-5.572E+00	2.922E-01	-2.786E-04
Standard concrete Al content (wf)	5.000E-05	-1.493E+00	>0.50	negligible
Standard concrete Fe content (wf)	5.000E-05	-2.167E+01	>0.50	negligible
Standard concrete Cl content (wf)	5.000E-05	2.481E+03	>0.50	negligible
Standard concrete Ca content (wf)	5.000E-05	-7.518E+00	>0.50	negligible
Standard concrete Mn content (wf)	5.000E-05	3.998E+01	>0.50	negligible
Magnetite concrete thickness (cm)	2.887E-02	-9.000E-03	>0.50	negligible
Magnetite concrete density (g/cm^3)	1.950E-01	-1.200E+00	9.413E-02	-2.340E-01
Magnetite concrete H content (wf)	5.000E-05	1.894E+02	>0.50	negligible
Magnetite concrete Si content (wf)	5.000E-05	-1.374E+01	>0.50	negligible
Magnetite concrete Al content (wf)	5.000E-05	-2.866E+01	>0.50	negligible
Magnetite concrete Fe content (wf)	5.000E-05	-6.406E+00	1.320E-01	-3.203E-04
Magnetite concrete Cl content (wf)	5.000E-05	-7.538E+03	>0.50	negligible
Magnetite concrete Ca content (wf)	5.000E-05	-1.519E+00	>0.50	negligible
Magnetite concrete Mn content (wf)	5.000E-05	7.452E+01	>0.50	negligible
Lead shield thickness (cm)	2.887E-02	-4.330E-01	2.553E-02	-1.250E-02
Lead shield density (g/cm^3)	4.500E-02	-4.605E-01	8.004E-02	-2.072E-02
Lead shield Ni content (wf)	7.550E-07	-5.763E+02	>0.50	negligible
Lead shield Fe content (wf)	2.850E-07	-6.493E+02	>0.50	negligible
Lead shield Cr content (wf)	1.625E-08	4.061E+04	>0.50	negligible
Lead shield Bi content (wf)	2.050E-04	6.174E+00	>0.50	negligible
Lead shield Al content (wf)	8.000E-08	6.752E+03	>0.50	negligible
Lead shield Ag content (wf)	1.500E-05	-7.267E+01	>0.50	negligible
Total experimental uncertainty absolute (σ_{tot}^d)				2.055E+00
Total experimental uncertainty relative				0.0731

ALARM-TRAN-PB-SHIELD-001

Table I-35. Case 5 scattering box 2 $^{197}Au(n,\gamma)^{198}Au$ experimental uncertainties

Uncertainty source	Uncertainty value (σ_i)	Sensitivity (S_i^d)		σ_i^d
		Value	Unc	
Measurement uncertainty	1.510%			3.900E+02
Number of fissions	6.000%			1.550E+03
Scattering box plastic bags	2.000%			5.166E+02
SILENE room concrete density (g/cm^3)	2.000E-01	-3.098E+02	>0.50	negligible
SILENE room concrete H content (wf)	1.050E-04	-2.398E+05	3.162E-01	-2.518E+01
SILENE room concrete B content (wf)	5.450E-07	-4.345E+08	1.126E-01	-2.368E+02
SILENE assembly wall thickness (cm)	2.887E-02	-4.653E+03	7.625E-02	-1.343E+02
SILENE assembly wall density (g/cm^3)	4.500E-01	-5.294E+02	0.1299	-2.382E+02
SILENE assembly wall Cr content (wf)	5.774E-03	1.772E+03	>0.50	negligible
SILENE assembly wall Ni content (wf)	5.774E-03	-5.398E+02	>0.50	negligible
Critical height (cm)	5.000E-04	-8.273E+02	4.842E-03	-4.136E-01
Solution concentration (g/L)	5.000E-02	-2.627E+02	3.443E-01	-1.314E+01
Solution density (g/cm^3)	5.451E-03	-1.965E+04	0.1226	-1.071E+02
Solution uranium enrichment (wf)	1.500E-05	-1.832E+01	3.200E-01	-2.748E-04
Solution temperature (deg C)	1.260E+01	-9.166E+00	>0.50	negligible
Scattering box 2 X position in room (cm)	1.000E+00	-1.716E+01	0.2542	-1.716E+01
Scattering box 2 Y position in room (cm)	1.000E+00	-2.143E+01	1.854E-01	-2.143E+01
Scattering box 2 Z position in room (cm)	1.000E+00	-1.589E+01	3.964E-01	-1.589E+01
Scattering box 2 block orientation (deg)	1.000E+00	-4.180E+01	>0.50	negligible
Scattering box 2 Al mounting plate thickness (cm)	2.887E-02	1.514E+03	>0.50	negligible
Scattering box 2 Al mounting plate density (g/cm^3)	3.500E-01	-1.258E+02	>0.50	negligible
Scattering box 2 Au foil thickness (cm)	1.443E-03	-3.056E+05	3.557E-02	-4.410E+02
Scattering box 2 Au foil radius (cm)	1.443E-02	-1.420E+03	>0.50	negligible
Scattering box 2 Au foil mass (g)	3.242E-03	-3.675E+02	7.161E-02	-1.191E+00
Scattering box S235JR density (g/cm^3)	4.250E-01	-1.224E+01	>0.50	negligible
Scattering box S235JR Mn content (wf)	3.300E-03	-2.274E+04	>0.50	negligible
Scattering box S235JR C content (wf)	4.007E-04	-3.883E+04	>0.50	negligible
Scattering box S235JR Cu content (wf)	1.296E-03	6.274E+03	>0.50	negligible
Standard concrete thickness (cm)	2.887E-02	-5.430E+01	>0.50	negligible
Standard concrete density (g/cm^3)	1.150E-01	-1.722E+03	1.434E-01	-1.980E+02
Standard concrete H content (wf)	5.000E-05	9.954E+04	>0.50	negligible
Standard concrete Si content (wf)	5.000E-05	-6.175E+03	3.254E-01	-3.087E-01
Standard concrete Al content (wf)	5.000E-05	-3.206E+03	>0.50	negligible
Standard concrete Fe content (wf)	5.000E-05	-6.985E+04	3.903E-01	-3.492E+00
Standard concrete Cl content (wf)	5.000E-05	4.196E+05	>0.50	negligible
Standard concrete Ca content (wf)	5.000E-05	-1.309E+04	4.782E-01	-6.546E-01
Standard concrete Mn content (wf)	5.000E-05	1.294E+06	>0.50	negligible
Magnetite concrete thickness (cm)	2.887E-02	-1.930E+01	>0.50	negligible
Magnetite concrete density (g/cm^3)	1.950E-01	-1.189E+03	1.226E-01	-2.319E+02
Magnetite concrete H content (wf)	5.000E-05	-1.434E+05	>0.50	negligible
Magnetite concrete Si content (wf)	5.000E-05	-2.014E+04	>0.50	negligible
Magnetite concrete Al content (wf)	5.000E-05	5.783E+04	>0.50	negligible
Magnetite concrete Fe content (wf)	5.000E-05	-3.747E+03	2.636E-01	-1.873E-01
Magnetite concrete Cl content (wf)	5.000E-05	3.739E+06	>0.50	negligible
Magnetite concrete Ca content (wf)	5.000E-05	-8.511E+03	>0.50	negligible
Magnetite concrete Mn content (wf)	5.000E-05	1.061E+05	>0.50	negligible
Lead shield thickness (cm)	2.887E-02	-4.128E+02	3.294E-02	-1.192E+01
Lead shield density (g/cm^3)	4.500E-02	-3.883E+02	1.249E-01	-1.747E+01
Lead shield Ni content (wf)	7.550E-07	1.410E+06	>0.50	negligible
Lead shield Fe content (wf)	2.850E-07	-6.665E+05	>0.50	negligible
Lead shield Cr content (wf)	1.625E-08	1.245E+08	>0.50	negligible
Lead shield Bi content (wf)	2.050E-04	-3.364E+03	>0.50	negligible
Lead shield Al content (wf)	8.000E-08	4.062E+05	>0.50	negligible
Lead shield Ag content (wf)	1.500E-05	-3.995E+03	>0.50	negligible
Total experimental uncertainty absolute (σ_{tot}^d)				1.804E+03
Total experimental uncertainty relative				0.0698

ALARM-TRAN-PB-SHIELD-001

Table I-36. Case 5 scattering box 2 ^{58}Ni(n,p)^{58}Co experimental uncertainties

Uncertainty source	Uncertainty value (σ_i)	Sensitivity (S_i^d)		σ_i^d
		Value	Unc	
Measurement uncertainty	1.633%			3.100E-03
Number of fissions	6.000%			1.139E-02
Scattering box plastic bags	2.000%			3.796E-03
SILENE room concrete density (g/cm^3)	2.000E-01	9.423E-03	>0.50	negligible
SILENE room concrete H content (wf)	1.050E-04	-4.512E+00	>0.50	negligible
SILENE room concrete B content (wf)	5.450E-07	8.184E+02	>0.50	negligible
SILENE assembly wall thickness (cm)	2.887E-02	-4.114E-02	2.625E-01	-1.188E-03
SILENE assembly wall density (g/cm^3)	4.500E-01	-2.670E-03	>0.50	negligible
SILENE assembly wall Cr content (wf)	5.774E-03	-1.799E-02	>0.50	negligible
SILENE assembly wall Ni content (wf)	5.774E-03	-3.356E-03	>0.50	negligible
Critical height (cm)	5.000E-04	-3.499E-03	3.780E-02	-1.750E-06
Solution concentration (g/L)	5.000E-02	-6.015E-04	>0.50	negligible
Solution density (g/cm^3)	5.451E-03	-1.756E-01	0.4365	-9.569E-04
Solution uranium enrichment (wf)	1.500E-05	-4.958E-06	>0.50	negligible
Solution temperature (deg C)	1.260E+01	1.154E-03	>0.50	negligible
Scattering box 2 X position in room (cm)	1.000E+00	-6.638E-04	0.1091	-6.638E-04
Scattering box 2 Y position in room (cm)	1.000E+00	-2.846E-04	2.119E-01	-2.846E-04
Scattering box 2 Z position in room (cm)	1.000E+00	7.231E-07	>0.50	negligible
Scattering box 2 block orientation (deg)	1.000E+00	4.385E-03	0.1975	4.385E-03
Scattering box 2 Al mounting plate thickness (cm)	2.887E-02	6.219E-02	>0.50	negligible
Scattering box 2 Al mounting plate density (g/cm^3)	3.500E-01	-9.062E-04	>0.50	negligible
Scattering box 2 Ni foil thickness (cm)	1.155E-02	-9.717E-03	>0.50	negligible
Scattering box 2 Ni foil radius (cm)	1.443E-02	-6.458E-03	>0.50	negligible
Scattering box 2 Ni foil mass (g)	1.159E-02	-8.401E-04	>0.50	negligible
Scattering box S235JR density (g/cm^3)	4.250E-01	2.357E-03	>0.50	negligible
Scattering box S235JR Mn content (wf)	3.300E-03	-2.208E-01	>0.50	negligible
Scattering box S235JR C content (wf)	4.007E-04	-7.052E-02	>0.50	negligible
Scattering box S235JR Cu content (wf)	1.296E-03	-1.629E+00	>0.50	negligible
Standard concrete thickness (cm)	2.887E-02	2.380E-04	>0.50	negligible
Standard concrete density (g/cm^3)	1.150E-01	-9.987E-03	>0.50	negligible
Standard concrete H content (wf)	5.000E-05	-2.718E+00	>0.50	negligible
Standard concrete Si content (wf)	5.000E-05	2.689E-03	>0.50	negligible
Standard concrete Al content (wf)	5.000E-05	-1.220E-01	>0.50	negligible
Standard concrete Fe content (wf)	5.000E-05	-1.041E+00	>0.50	negligible
Standard concrete Cl content (wf)	5.000E-05	8.478E+01	>0.50	negligible
Standard concrete Ca content (wf)	5.000E-05	-4.535E-02	>0.50	negligible
Standard concrete Mn content (wf)	5.000E-05	2.798E+00	>0.50	negligible
Magnetite concrete thickness (cm)	2.887E-02	-8.630E-04	>0.50	negligible
Magnetite concrete density (g/cm^3)	1.950E-01	-8.580E-02	5.152E-02	-1.673E-02
Magnetite concrete H content (wf)	5.000E-05	-5.977E+00	>0.50	negligible
Magnetite concrete Si content (wf)	5.000E-05	8.275E-02	>0.50	negligible
Magnetite concrete Al content (wf)	5.000E-05	-5.761E-01	>0.50	negligible
Magnetite concrete Fe content (wf)	5.000E-05	1.101E-01	2.878E-01	5.507E-06
Magnetite concrete Cl content (wf)	5.000E-05	-1.199E+02	>0.50	negligible
Magnetite concrete Ca content (wf)	5.000E-05	6.457E-02	>0.50	negligible
Magnetite concrete Mn content (wf)	5.000E-05	2.240E+00	>0.50	negligible
Lead shield thickness (cm)	2.887E-02	-1.897E-02	2.298E-02	-5.476E-04
Lead shield density (g/cm^3)	4.500E-02	-1.741E-02	8.897E-02	-7.835E-04
Lead shield Ni content (wf)	7.550E-07	4.608E+01	>0.50	negligible
Lead shield Fe content (wf)	2.850E-07	3.502E+00	>0.50	negligible
Lead shield Cr content (wf)	1.625E-08	1.597E+02	>0.50	negligible
Lead shield Bi content (wf)	2.050E-04	-8.423E-02	>0.50	negligible
Lead shield Al content (wf)	8.000E-08	9.033E+00	>0.50	negligible
Lead shield Ag content (wf)	1.500E-05	7.620E-01	>0.50	negligible
Total experimental uncertainty absolute (σ_{tot}^d)				2.137E-02
Total experimental uncertainty relative				0.1126

I.6 Case 6 scattering Box Position 3 Uncertainties

Table I-37. Case 6 scattering box 3 $^{59}Co(n,\gamma)^{60}co$ experimental uncertainties

Uncertainty source	Uncertainty value (σ_i)	Sensitivity (S_i^d)		σ_i^d
		Value	Unc	
Measurement uncertainty	2.079%			9.500E-01
Number of fissions	6.000%			2.742E+00
Scattering box plastic bags	2.000%			9.140E-01
SILENE room concrete density (g/cm^3)	2.000E-01	-3.650E-01	>0.50	negligible
SILENE room concrete H content (wf)	1.050E-04	2.601E+02	3.402E-01	2.731E-02
SILENE room concrete B content (wf)	5.450E-07	-5.792E+05	9.864E-02	-3.157E-01
SILENE assembly wall thickness (cm)	2.887E-02	-1.014E+01	3.904E-02	-2.926E-01
SILENE assembly wall density (g/cm^3)	4.500E-01	-8.059E-01	0.0996	-3.627E-01
SILENE assembly wall Cr content (wf)	5.774E-03	-1.914E+00	>0.50	negligible
SILENE assembly wall Ni content (wf)	5.774E-03	-3.190E+00	>0.50	negligible
Critical height (cm)	5.000E-04	-1.103E+00	4.043E-03	-5.517E-04
Solution concentration (g/L)	5.000E-02	-3.267E-01	3.232E-01	-1.633E-02
Solution density (g/cm^3)	5.451E-03	-3.666E+01	0.0768	-1.998E-01
Solution uranium enrichment (wf)	1.500E-05	-5.096E-02	1.343E-01	-7.644E-07
Solution temperature (deg C)	1.260E+01	3.952E-03	>0.50	negligible
Scattering box 3 X position in room (cm)	1.000E+00	-7.864E-02	0.0666	-7.864E-02
Scattering box 3 Y position in room (cm)	1.000E+00	-5.844E-02	8.604E-02	-5.844E-02
Scattering box 3 Z position in room (cm)	1.000E+00	4.831E-03	>0.50	negligible
Scattering box 3 Al mounting plate thickness (cm)	2.887E-02	4.403E-01	>0.50	negligible
Scattering box 3 Al mounting plate density (g/cm^3)	3.500E-01	-7.554E-02	>0.50	negligible
Scattering box 3 Co foil thickness (cm)	1.155E-02	-9.306E+01	1.705E-02	-1.075E+00
Scattering box 3 Co foil radius (cm)	1.443E-02	-4.752E+00	>0.50	negligible
Scattering box 3 Co foil mass (g)	1.163E-02	-2.368E+00	2.892E-02	-2.755E-02
Scattering box S235JR density (g/cm^3)	4.250E-01	-1.506E-01	>0.50	negligible
Scattering box S235JR Mn content (wf)	3.300E-03	-2.476E+01	>0.50	negligible
Scattering box S235JR C content (wf)	4.007E-04	9.886E+01	>0.50	negligible
Scattering box S235JR Cu content (wf)	1.296E-03	1.283E+01	>0.50	negligible
Standard concrete thickness (cm)	2.887E-02	-5.820E-02	>0.50	negligible
Standard concrete density (g/cm^3)	1.150E-01	7.252E-01	3.799E-01	8.339E-02
Standard concrete H content (wf)	5.000E-05	1.349E+03	7.331E-02	6.744E-02
Standard concrete Si content (wf)	5.000E-05	-9.549E+00	2.455E-01	-4.774E-04
Standard concrete Al content (wf)	5.000E-05	-9.612E+00	>0.50	negligible
Standard concrete Fe content (wf)	5.000E-05	-5.875E+01	>0.50	negligible
Standard concrete Cl content (wf)	5.000E-05	7.404E+02	>0.50	negligible
Standard concrete Ca content (wf)	5.000E-05	-2.462E+01	2.965E-01	-1.231E-03
Standard concrete Mn content (wf)	5.000E-05	4.179E+02	>0.50	negligible
Magnetite concrete thickness (cm)	2.887E-02	6.280E-02	>0.50	negligible
Magnetite concrete density (g/cm^3)	1.950E-01	-2.720E-01	>0.50	negligible
Magnetite concrete H content (wf)	5.000E-05	3.749E+00	>0.50	negligible
Magnetite concrete Si content (wf)	5.000E-05	6.654E+00	>0.50	negligible
Magnetite concrete Al content (wf)	5.000E-05	2.615E+01	>0.50	negligible
Magnetite concrete Fe content (wf)	5.000E-05	-2.420E+00	4.763E-01	-1.210E-04
Magnetite concrete Cl content (wf)	5.000E-05	3.021E+03	>0.50	negligible
Magnetite concrete Ca content (wf)	5.000E-05	3.386E+00	>0.50	negligible
Magnetite concrete Mn content (wf)	5.000E-05	2.116E+02	>0.50	negligible
Lead shield thickness (cm)	2.887E-02	-8.434E-01	1.881E-02	-2.435E-02
Lead shield density (g/cm^3)	4.500E-02	-7.310E-01	7.737E-02	-3.289E-02
Lead shield Ni content (wf)	7.550E-07	3.073E+03	>0.50	negligible
Lead shield Fe content (wf)	2.850E-07	-4.437E+03	>0.50	negligible
Lead shield Cr content (wf)	1.625E-08	-2.369E+04	>0.50	negligible
Lead shield Bi content (wf)	2.050E-04	-4.720E+00	>0.50	negligible
Lead shield Al content (wf)	8.000E-08	1.090E+04	>0.50	negligible
Lead shield Ag content (wf)	1.500E-05	-3.050E+01	>0.50	negligible
Total experimental uncertainty absolute (σ_{tot}^d)				3.285E+00
Total experimental uncertainty relative				0.0719

ALARM-TRAN-PB-SHIELD-001

Table I-38. Case 6 scattering box 3 $^{197}Au(n,\gamma)^{198}Au$ experimental uncertainties

Uncertainty source	Uncertainty value (σ_i)	Sensitivity (S_i^d)		σ_i^d
		Value	Unc	
Measurement uncertainty	1.602%			7.000E+02
Number of fissions	6.000%			2.622E+03
Scattering box plastic bags	2.000%			8.740E+02
SILENE room concrete density (g/cm^3)	2.000E-01	-5.067E+02	>0.50	negligible
SILENE room concrete H content (wf)	1.050E-04	-8.358E+04	>0.50	negligible
SILENE room concrete B content (wf)	5.450E-07	-5.077E+08	1.539E-01	-2.767E+02
SILENE assembly wall thickness (cm)	2.887E-02	-9.047E+03	5.990E-02	-2.612E+02
SILENE assembly wall density (g/cm^3)	4.500E-01	-8.167E+02	0.1342	-3.675E+02
SILENE assembly wall Cr content (wf)	5.774E-03	-4.301E+02	>0.50	negligible
SILENE assembly wall Ni content (wf)	5.774E-03	-4.846E+03	>0.50	negligible
Critical height (cm)	5.000E-04	-1.105E+03	5.653E-03	-5.526E-01
Solution concentration (g/L)	5.000E-02	-3.927E+02	3.674E-01	-1.964E+01
Solution density (g/cm^3)	5.451E-03	-3.562E+04	0.1081	-1.941E+02
Solution uranium enrichment (wf)	1.500E-05	-5.528E+01	1.692E-01	-8.291E-04
Solution temperature (deg C)	1.260E+01	-5.506E+01	>0.50	negligible
Scattering box 3 X position in room (cm)	1.000E+00	-7.846E+01	0.0901	-7.846E+01
Scattering box 3 Y position in room (cm)	1.000E+00	-6.800E+01	1.005E-01	-6.800E+01
Scattering box 3 Z position in room (cm)	1.000E+00	-1.025E+01	>0.50	negligible
Scattering box 3 Al mounting plate thickness (cm)	2.887E-02	2.881E+03	>0.50	negligible
Scattering box 3 Al mounting plate density (g/cm^3)	3.500E-01	-7.217E+01	>0.50	negligible
Scattering box 3 Au foil thickness (cm)	1.443E-03	-4.967E+05	3.495E-02	-7.167E+02
Scattering box 3 Au foil radius (cm)	1.443E-02	-6.852E+02	>0.50	negligible
Scattering box 3 Au foil mass (g)	3.124E-03	-6.419E+02	6.793E-02	-2.005E+00
Scattering box S235JR density (g/cm^3)	4.250E-01	-2.288E+02	4.823E-01	-9.726E+01
Scattering box S235JR Mn content (wf)	3.300E-03	3.256E+04	>0.50	negligible
Scattering box S235JR C content (wf)	4.007E-04	2.208E+04	>0.50	negligible
Scattering box S235JR Cu content (wf)	1.296E-03	-1.173E+04	>0.50	negligible
Standard concrete thickness (cm)	2.887E-02	-1.150E+02	>0.50	negligible
Standard concrete density (g/cm^3)	1.150E-01	6.595E+02	>0.50	negligible
Standard concrete H content (wf)	5.000E-05	8.064E+05	1.678E-01	4.032E+01
Standard concrete Si content (wf)	5.000E-05	-1.537E+03	>0.50	negligible
Standard concrete Al content (wf)	5.000E-05	-1.582E+04	>0.50	negligible
Standard concrete Fe content (wf)	5.000E-05	-5.907E+04	>0.50	negligible
Standard concrete Cl content (wf)	5.000E-05	-1.201E+05	>0.50	negligible
Standard concrete Ca content (wf)	5.000E-05	-8.762E+03	>0.50	negligible
Standard concrete Mn content (wf)	5.000E-05	-1.585E+06	>0.50	negligible
Magnetite concrete thickness (cm)	2.887E-02	9.200E+00	>0.50	negligible
Magnetite concrete density (g/cm^3)	1.950E-01	-5.190E+02	4.280E-01	-1.012E+02
Magnetite concrete H content (wf)	5.000E-05	-2.279E+05	>0.50	negligible
Magnetite concrete Si content (wf)	5.000E-05	7.130E+03	>0.50	negligible
Magnetite concrete Al content (wf)	5.000E-05	-6.134E+04	>0.50	negligible
Magnetite concrete Fe content (wf)	5.000E-05	-2.372E+03	>0.50	negligible
Magnetite concrete Cl content (wf)	5.000E-05	-5.203E+05	>0.50	negligible
Magnetite concrete Ca content (wf)	5.000E-05	-4.819E+03	>0.50	negligible
Magnetite concrete Mn content (wf)	5.000E-05	-2.926E+05	>0.50	negligible
Lead shield thickness (cm)	2.887E-02	-8.405E+02	2.463E-02	-2.426E+01
Lead shield density (g/cm^3)	4.500E-02	-9.842E+02	7.512E-02	-4.429E+01
Lead shield Ni content (wf)	7.550E-07	-1.392E+06	>0.50	negligible
Lead shield Fe content (wf)	2.850E-07	-9.830E+06	>0.50	negligible
Lead shield Cr content (wf)	1.625E-08	1.570E+07	>0.50	negligible
Lead shield Bi content (wf)	2.050E-04	6.907E+03	>0.50	negligible
Lead shield Al content (wf)	8.000E-08	5.224E+06	>0.50	negligible
Lead shield Ag content (wf)	1.500E-05	-1.380E+05	>0.50	negligible
Total experimental uncertainty absolute (σ_{tot}^d)				2.999E+03
Total experimental uncertainty relative				0.0686

ALARM-TRAN-PB-SHIELD-001

Table I-39. Case 6 scattering box 3 ^{58}Ni(n,p)^{58}Co experimental uncertainties

Uncertainty source	Uncertainty value (σ_i)	Sensitivity (S_i^d)		σ_i^d
		Value	Unc	
Measurement uncertainty	3.143%			5.500E-02
Number of fissions	6.000%			1.050E-01
Scattering box plastic bags	2.000%			3.500E-02
SILENE room concrete density (g/cm^3)	2.000E-01	-4.346E-03	>0.50	negligible
SILENE room concrete H content (wf)	1.050E-04	-1.500E+01	>0.50	negligible
SILENE room concrete B content (wf)	5.450E-07	-1.028E+03	>0.50	negligible
SILENE assembly wall thickness (cm)	2.887E-02	-2.622E-01	1.329E-01	-7.570E-03
SILENE assembly wall density (g/cm^3)	4.500E-01	-3.211E-02	0.2154	-1.445E-02
SILENE assembly wall Cr content (wf)	5.774E-03	-1.451E-02	>0.50	negligible
SILENE assembly wall Ni content (wf)	5.774E-03	-1.399E-02	>0.50	negligible
Critical height (cm)	5.000E-04	-2.150E-02	1.968E-02	-1.075E-05
Solution concentration (g/L)	5.000E-02	-7.420E-03	>0.50	negligible
Solution density (g/cm^3)	5.451E-03	-1.208E+00	0.2009	-6.585E-03
Solution uranium enrichment (wf)	1.500E-05	2.486E-05	>0.50	negligible
Solution temperature (deg C)	1.260E+01	-4.007E-04	>0.50	negligible
Scattering box 3 X position in room (cm)	1.000E+00	-4.326E-03	0.0811	-4.326E-03
Scattering box 3 Y position in room (cm)	1.000E+00	-4.794E-03	6.812E-02	-4.794E-03
Scattering box 3 Z position in room (cm)	1.000E+00	-1.334E-03	4.069E-01	-1.334E-03
Scattering box 3 Al mounting plate thickness (cm)	2.887E-02	-2.720E-02	>0.50	negligible
Scattering box 3 Al mounting plate density (g/cm^3)	3.500E-01	-1.481E-03	>0.50	negligible
Scattering box 3 Ni foil thickness (cm)	1.155E-02	-8.423E-02	>0.50	negligible
Scattering box 3 Ni foil radius (cm)	1.443E-02	-1.681E-02	>0.50	negligible
Scattering box 3 Ni foil mass (g)	1.157E-02	-1.275E-03	>0.50	negligible
Scattering box S235JR density (g/cm^3)	4.250E-01	5.598E-04	>0.50	negligible
Scattering box S235JR Mn content (wf)	3.300E-03	-6.851E-01	>0.50	negligible
Scattering box S235JR C content (wf)	4.007E-04	-1.041E+01	>0.50	negligible
Scattering box S235JR Cu content (wf)	1.296E-03	-4.968E+00	>0.50	negligible
Standard concrete thickness (cm)	2.887E-02	1.370E-03	>0.50	negligible
Standard concrete density (g/cm^3)	1.150E-01	-8.137E-03	>0.50	negligible
Standard concrete H content (wf)	5.000E-05	-6.794E+00	>0.50	negligible
Standard concrete Si content (wf)	5.000E-05	-2.658E-01	>0.50	negligible
Standard concrete Al content (wf)	5.000E-05	-4.694E-01	>0.50	negligible
Standard concrete Fe content (wf)	5.000E-05	-8.988E-01	>0.50	negligible
Standard concrete Cl content (wf)	5.000E-05	-2.802E+01	>0.50	negligible
Standard concrete Ca content (wf)	5.000E-05	-3.957E-01	>0.50	negligible
Standard concrete Mn content (wf)	5.000E-05	2.401E+01	>0.50	negligible
Magnetite concrete thickness (cm)	2.887E-02	3.200E-04	>0.50	negligible
Magnetite concrete density (g/cm^3)	1.950E-01	-2.139E-03	>0.50	negligible
Magnetite concrete H content (wf)	5.000E-05	-2.874E+00	>0.50	negligible
Magnetite concrete Si content (wf)	5.000E-05	1.019E+00	>0.50	negligible
Magnetite concrete Al content (wf)	5.000E-05	-2.597E+00	>0.50	negligible
Magnetite concrete Fe content (wf)	5.000E-05	2.840E-02	>0.50	negligible
Magnetite concrete Cl content (wf)	5.000E-05	-4.001E+00	>0.50	negligible
Magnetite concrete Ca content (wf)	5.000E-05	-2.595E-01	>0.50	negligible
Magnetite concrete Mn content (wf)	5.000E-05	1.834E+00	>0.50	negligible
Lead shield thickness (cm)	2.887E-02	-1.514E-01	9.302E-03	-4.372E-03
Lead shield density (g/cm^3)	4.500E-02	-1.389E-01	3.586E-02	-6.250E-03
Lead shield Ni content (wf)	7.550E-07	-8.676E+01	>0.50	negligible
Lead shield Fe content (wf)	2.850E-07	3.332E+01	>0.50	negligible
Lead shield Cr content (wf)	1.625E-08	4.017E+03	>0.50	negligible
Lead shield Bi content (wf)	2.050E-04	9.875E-02	>0.50	negligible
Lead shield Al content (wf)	8.000E-08	-2.001E+02	>0.50	negligible
Lead shield Ag content (wf)	1.500E-05	-1.532E+00	>0.50	negligible
Total experimental uncertainty absolute (σ_{tot}^d)				1.252E-01
Total experimental uncertainty relative				0.0716

ALARM-TRAN-PB-SHIELD-001

Table I-40. Case 6 scattering box 3 Al_2O_3 TLD experimental uncertainties

Uncertainty source	Uncertainty value (σ_i)	Sensitivity (S_i^d)		σ_i^d
		Value	Unc	
Measurement uncertainty	5.000%			2.100E-02
Number of fissions	6.000%			2.520E-02
SILENE room concrete density (g/cm^3)	2.000E-01	-9.242E-06	>0.50	negligible
SILENE room concrete H content (wf)	1.050E-04	7.992E-01	>0.50	negligible
SILENE room concrete B content (wf)	5.450E-07	-4.135E+03	3.559E-01	-2.253E-03
SILENE assembly wall thickness (cm)	2.887E-02	-4.680E-02	2.121E-01	-1.351E-03
SILENE assembly wall density (g/cm^3)	4.500E-01	-2.448E-03	>0.50	negligible
SILENE assembly wall Cr content (wf)	5.774E-03	2.388E-02	>0.50	negligible
SILENE assembly wall Ni content (wf)	5.774E-03	6.931E-03	>0.50	negligible
Critical height (cm)	5.000E-04	-6.060E-03	2.193E-02	-3.030E-06
Solution concentration (g/L)	5.000E-02	-2.613E-03	>0.50	negligible
Solution density (g/cm^3)	5.451E-03	-2.884E-01	0.3117	-1.572E-03
Solution uranium enrichment (wf)	1.500E-05	-6.008E-04	2.976E-01	-9.012E-09
Solution temperature (deg C)	1.260E+01	1.694E-04	>0.50	negligible
Scattering box 3 X position in room (cm)	1.000E+00	-3.627E-04	0.3164	-3.627E-04
Scattering box 3 Y position in room (cm)	1.000E+00	-2.486E-04	3.983E-01	-2.486E-04
Scattering box 3 Z position in room (cm)	1.000E+00	4.452E-05	>0.50	negligible
Scattering box 3 Al mounting plate thickness (cm)	2.887E-02	4.898E-02	>0.50	negligible
Scattering box 3 Al mounting plate density (g/cm^3)	3.500E-01	1.066E-03	>0.50	negligible
Scattering box S235JR density (g/cm^3)	4.250E-01	-1.986E-03	>0.50	negligible
Scattering box S235JR Mn content (wf)	3.300E-03	-5.369E-01	>0.50	negligible
Scattering box S235JR C content (wf)	4.007E-04	3.265E-01	>0.50	negligible
Scattering box S235JR Cu content (wf)	1.296E-03	-4.357E-01	>0.50	negligible
Standard concrete thickness (cm)	2.887E-02	-4.500E-04	>0.50	negligible
Standard concrete density (g/cm^3)	1.150E-01	1.152E-02	>0.50	negligible
Standard concrete H content (wf)	5.000E-05	1.581E+01	1.682E-01	7.903E-04
Standard concrete Si content (wf)	5.000E-05	7.937E-02	>0.50	negligible
Standard concrete Al content (wf)	5.000E-05	2.846E-01	>0.50	negligible
Standard concrete Fe content (wf)	5.000E-05	1.777E-01	>0.50	negligible
Standard concrete Cl content (wf)	5.000E-05	2.837E+02	>0.50	negligible
Standard concrete Ca content (wf)	5.000E-05	-1.122E-01	>0.50	negligible
Standard concrete Mn content (wf)	5.000E-05	3.624E+01	>0.50	negligible
Magnetite concrete thickness (cm)	2.887E-02	-6.400E-04	>0.50	negligible
Magnetite concrete density (g/cm^3)	1.950E-01	1.544E-03	>0.50	negligible
Magnetite concrete H content (wf)	5.000E-05	4.397E+00	>0.50	negligible
Magnetite concrete Si content (wf)	5.000E-05	-3.007E-01	>0.50	negligible
Magnetite concrete Al content (wf)	5.000E-05	2.054E-01	>0.50	negligible
Magnetite concrete Fe content (wf)	5.000E-05	-1.611E-02	>0.50	negligible
Magnetite concrete Cl content (wf)	5.000E-05	5.997E+01	>0.50	negligible
Magnetite concrete Ca content (wf)	5.000E-05	1.748E-01	>0.50	negligible
Magnetite concrete Mn content (wf)	5.000E-05	2.645E+00	>0.50	negligible
Lead shield thickness (cm)	2.887E-02	-8.275E-03	6.061E-02	-2.389E-04
Lead shield density (g/cm^3)	4.500E-02	-7.456E-03	1.894E-01	-3.355E-04
Lead shield Ni content (wf)	7.550E-07	-4.878E+01	>0.50	negligible
Lead shield Fe content (wf)	2.850E-07	-5.030E+01	>0.50	negligible
Lead shield Cr content (wf)	1.625E-08	6.498E+02	>0.50	negligible
Lead shield Bi content (wf)	2.050E-04	-1.680E-02	>0.50	negligible
Lead shield Al content (wf)	8.000E-08	-1.225E+02	>0.50	negligible
Lead shield Ag content (wf)	1.500E-05	7.791E-01	>0.50	negligible
Total experimental uncertainty absolute (σ_{tot}^d)				3.296E-02
Total experimental uncertainty relative				0.0785

I.7 Case 7 Scattering Box Position 4 Uncertainties

Table I-41. Case 7 scattering box 4 $^{59}Co(n,\gamma)^{60}Co$ experimental uncertainties

Uncertainty source	Uncertainty value (σ_i)	Sensitivity (S_i^d)		σ_i^d
		Value	Unc	
Measurement uncertainty	2.184%			9.000E-01
Number of fissions	6.000%			2.472E+00
Scattering box plastic bags	2.000%			8.240E-01
SILENE room concrete density (g/cm^3)	2.000E-01	-7.261E-02	>0.50	negligible
SILENE room concrete H content (wf)	1.050E-04	1.139E+02	>0.50	negligible
SILENE room concrete B content (wf)	5.450E-07	-5.249E+05	9.922E-02	-2.861E-01
SILENE assembly wall thickness (cm)	2.887E-02	-8.811E+00	4.095E-02	-2.544E-01
SILENE assembly wall density (g/cm^3)	4.500E-01	-7.739E-01	0.1005	-3.483E-01
SILENE assembly wall Cr content (wf)	5.774E-03	-7.100E-01	>0.50	negligible
SILENE assembly wall Ni content (wf)	5.774E-03	-5.501E-01	>0.50	negligible
Critical height (cm)	5.000E-04	-1.022E+00	4.549E-03	-5.111E-04
Solution concentration (g/L)	5.000E-02	-3.275E-01	3.138E-01	-1.637E-02
Solution density (g/cm^3)	5.451E-03	-3.158E+01	0.0813	-1.721E-01
Solution uranium enrichment (wf)	1.500E-05	-4.645E-02	1.344E-01	-6.968E-07
Solution temperature (deg C)	1.260E+01	1.510E-02	>0.50	negligible
Scattering box 4 X position in room (cm)	1.000E+00	-2.726E-02	0.1903	-2.726E-02
Scattering box 4 Y position in room (cm)	1.000E+00	-7.566E-02	0.0611	-7.566E-02
Scattering box 4 Z position in room (cm)	1.000E+00	4.746E-03	>0.50	negligible
Scattering box 4 block orientation (deg)	1.000E+00	-2.314E-01	0.1250	-2.314E-01
Scattering box 4 Al mounting plate thickness (cm)	2.887E-02	-2.371E+00	>0.50	negligible
Scattering box 4 Al mounting plate density (g/cm^3)	3.500E-01	-6.702E-02	>0.50	negligible
Scattering box 4 Co foil thickness (cm)	1.155E-02	-8.683E+01	0.0167	-1.003E+00
Scattering box 4 Co foil radius (cm)	1.443E-02	-4.805E+00	>0.50	negligible
Scattering box 4 Co foil mass (g)	1.161E-02	-2.316E+00	2.706E-02	-2.689E-02
Scattering box S235JR density (g/cm^3)	4.250E-01	-2.342E-01	3.143E-01	-9.953E-02
Scattering box S235JR Mn content (wf)	3.300E-03	-8.245E+00	>0.50	negligible
Scattering box S235JR C content (wf)	4.007E-04	-3.528E+01	>0.50	negligible
Scattering box S235JR Cu content (wf)	1.296E-03	-3.272E+00	>0.50	negligible
Standard concrete thickness (cm)	2.887E-02	-5.400E-03	>0.50	negligible
Standard concrete density (g/cm^3)	1.150E-01	-5.947E-01	4.499E-01	-6.839E-02
Standard concrete H content (wf)	5.000E-05	8.980E+02	1.005E-01	4.490E-02
Standard concrete Si content (wf)	5.000E-05	-5.955E+00	3.590E-01	-2.977E-04
Standard concrete Al content (wf)	5.000E-05	2.215E+01	4.557E-01	1.108E-03
Standard concrete Fe content (wf)	5.000E-05	-3.397E+01	>0.50	negligible
Standard concrete Cl content (wf)	5.000E-05	5.661E+03	>0.50	negligible
Standard concrete Ca content (wf)	5.000E-05	-2.045E+00	>0.50	negligible
Standard concrete Mn content (wf)	5.000E-05	1.505E+03	>0.50	negligible
Magnetite concrete thickness (cm)	2.887E-02	7.000E-02	>0.50	negligible
Magnetite concrete density (g/cm^3)	1.950E-01	-2.259E-01	>0.50	negligible
Magnetite concrete H content (wf)	5.000E-05	-7.808E+00	>0.50	negligible
Magnetite concrete Si content (wf)	5.000E-05	-1.432E+01	>0.50	negligible
Magnetite concrete Al content (wf)	5.000E-05	2.365E+01	>0.50	negligible
Magnetite concrete Fe content (wf)	5.000E-05	-3.161E+00	3.328E-01	-1.581E-04
Magnetite concrete Cl content (wf)	5.000E-05	1.800E+02	>0.50	negligible
Magnetite concrete Ca content (wf)	5.000E-05	-5.456E+00	>0.50	negligible
Magnetite concrete Mn content (wf)	5.000E-05	-6.667E+01	>0.50	negligible
Lead shield thickness (cm)	2.887E-02	-7.435E-01	1.948E-02	-2.146E-02
Lead shield density (g/cm^3)	4.500E-02	-6.939E-01	7.440E-02	-3.122E-02
Lead shield Ni content (wf)	7.550E-07	1.722E+02	>0.50	negligible
Lead shield Fe content (wf)	2.850E-07	7.382E+03	>0.50	negligible
Lead shield Cr content (wf)	1.625E-08	-4.648E+04	>0.50	negligible
Lead shield Bi content (wf)	2.050E-04	-9.874E-01	>0.50	negligible
Lead shield Al content (wf)	8.000E-08	-8.126E+03	>0.50	negligible
Lead shield Ag content (wf)	1.500E-05	-8.999E+00	>0.50	negligible
Total experimental uncertainty absolute (σ_{tot}^d)				2.997E+00
Total experimental uncertainty relative				0.0727

ALARM-TRAN-PB-SHIELD-001

Table I-42. Case 7 scattering box 4 $^{197}Au(n,\gamma)^{198}Au$ experimental uncertainties

Uncertainty source	Uncertainty value (σ_i)	Sensitivity (S_i^d)		σ_i^d
		Value	Unc	
Measurement uncertainty	1.667%			6.500E+02
Number of fissions	6.000%			2.340E+03
Scattering box plastic bags	2.000%			7.800E+02
SILENE room concrete density (g/cm^3)	2.000E-01	-4.131E+02	>0.50	negligible
SILENE room concrete H content (wf)	1.050E-04	1.876E+04	>0.50	negligible
SILENE room concrete B content (wf)	5.450E-07	-3.564E+08	2.075E-01	-1.942E+02
SILENE assembly wall thickness (cm)	2.887E-02	-8.111E+03	6.325E-02	-2.342E+02
SILENE assembly wall density (g/cm^3)	4.500E-01	-7.630E+02	0.1361	-3.434E+02
SILENE assembly wall Cr content (wf)	5.774E-03	2.284E+03	>0.50	negligible
SILENE assembly wall Ni content (wf)	5.774E-03	-3.895E+03	>0.50	negligible
Critical height (cm)	5.000E-04	-1.040E+03	5.654E-03	-5.200E-01
Solution concentration (g/L)	5.000E-02	-1.516E+02	>0.50	negligible
Solution density (g/cm^3)	5.451E-03	-3.170E+04	0.1099	-1.728E+02
Solution uranium enrichment (wf)	1.500E-05	-3.441E+01	2.574E-01	-5.161E-04
Solution temperature (deg C)	1.260E+01	4.665E+00	>0.50	negligible
Scattering box 4 X position in room (cm)	1.000E+00	-3.794E+01	0.1600	-3.794E+01
Scattering box 4 Y position in room (cm)	1.000E+00	-7.171E+01	7.490E-02	-7.171E+01
Scattering box 4 Z position in room (cm)	1.000E+00	6.653E+00	>0.50	negligible
Scattering box 4 block orientation (deg)	1.000E+00	-2.788E+02	0.1471	-2.788E+02
Scattering box 4 Al mounting plate thickness (cm)	2.887E-02	-2.000E+01	>0.50	negligible
Scattering box 4 Al mounting plate density (g/cm^3)	3.500E-01	9.737E+01	>0.50	negligible
Scattering box 4 Au foil thickness (cm)	1.443E-03	-4.578E+05	3.431E-02	-6.605E+02
Scattering box 4 Au foil radius (cm)	1.443E-02	-9.102E+02	>0.50	negligible
Scattering box 4 Au foil mass (g)	3.102E-03	-5.918E+02	6.712E-02	-1.836E+00
Scattering box S235JR density (g/cm^3)	4.250E-01	-2.081E+02	4.798E-01	-8.844E+01
Scattering box S235JR Mn content (wf)	3.300E-03	-3.804E+04	>0.50	negligible
Scattering box S235JR C content (wf)	4.007E-04	-9.182E+04	>0.50	negligible
Scattering box S235JR Cu content (wf)	1.296E-03	4.093E+03	>0.50	negligible
Standard concrete thickness (cm)	2.887E-02	-1.200E+00	>0.50	negligible
Standard concrete density (g/cm^3)	1.150E-01	-1.286E+03	2.912E-01	-1.479E+02
Standard concrete H content (wf)	5.000E-05	5.765E+05	2.122E-01	2.882E+01
Standard concrete Si content (wf)	5.000E-05	-7.691E+03	3.767E-01	-3.846E-01
Standard concrete Al content (wf)	5.000E-05	-9.162E+03	>0.50	negligible
Standard concrete Fe content (wf)	5.000E-05	-3.741E+04	>0.50	negligible
Standard concrete Cl content (wf)	5.000E-05	4.403E+06	>0.50	negligible
Standard concrete Ca content (wf)	5.000E-05	-1.432E+04	>0.50	negligible
Standard concrete Mn content (wf)	5.000E-05	3.253E+04	>0.50	negligible
Magnetite concrete thickness (cm)	2.887E-02	2.000E-01	>0.50	negligible
Magnetite concrete density (g/cm^3)	1.950E-01	1.630E+02	>0.50	negligible
Magnetite concrete H content (wf)	5.000E-05	1.193E+05	>0.50	negligible
Magnetite concrete Si content (wf)	5.000E-05	4.024E+03	>0.50	negligible
Magnetite concrete Al content (wf)	5.000E-05	-2.225E+04	>0.50	negligible
Magnetite concrete Fe content (wf)	5.000E-05	-1.564E+03	>0.50	negligible
Magnetite concrete Cl content (wf)	5.000E-05	2.601E+05	>0.50	negligible
Magnetite concrete Ca content (wf)	5.000E-05	-1.109E+04	>0.50	negligible
Magnetite concrete Mn content (wf)	5.000E-05	-1.996E+05	>0.50	negligible
Lead shield thickness (cm)	2.887E-02	-7.430E+02	2.775E-02	-2.145E+01
Lead shield density (g/cm^3)	4.500E-02	-6.244E+02	1.123E-01	-2.810E+01
Lead shield Ni content (wf)	7.550E-07	2.296E+06	>0.50	negligible
Lead shield Fe content (wf)	2.850E-07	5.886E+05	>0.50	negligible
Lead shield Cr content (wf)	1.625E-08	-1.603E+07	>0.50	negligible
Lead shield Bi content (wf)	2.050E-04	3.001E+03	>0.50	negligible
Lead shield Al content (wf)	8.000E-08	1.151E+07	>0.50	negligible
Lead shield Ag content (wf)	1.500E-05	7.568E+02	>0.50	negligible
Total experimental uncertainty absolute (σ_{tot}^d)				2.702E+03
Total experimental uncertainty relative				0.0693

ALARM-TRAN-PB-SHIELD-001

Table I-43. Case 7 scattering box 4 ^{58}Ni(n,p)^{58}Co experimental uncertainties

Uncertainty source	Uncertainty value (σ_i)	Sensitivity (S_i^d)		σ_i^d
		Value	Unc	
Measurement uncertainty	3.279%			6.000E-02
Number of fissions	6.000%			1.098E-01
Scattering box plastic bags	2.000%			3.660E-02
SILENE room concrete density (g/cm^3)	2.000E-01	-1.729E-02	>0.50	negligible
SILENE room concrete H content (wf)	1.050E-04	-1.564E+00	>0.50	negligible
SILENE room concrete B content (wf)	5.450E-07	-2.318E+03	>0.50	negligible
SILENE assembly wall thickness (cm)	2.887E-02	-3.103E-01	1.700E-01	-8.958E-03
SILENE assembly wall density (g/cm^3)	4.500E-01	-2.680E-02	0.4184	-1.206E-02
SILENE assembly wall Cr content (wf)	5.774E-03	-1.476E-01	>0.50	negligible
SILENE assembly wall Ni content (wf)	5.774E-03	4.905E-02	>0.50	negligible
Critical height (cm)	5.000E-04	-2.323E-02	2.723E-02	-1.162E-05
Solution concentration (g/L)	5.000E-02	4.402E-03	>0.50	negligible
Solution density (g/cm^3)	5.451E-03	-1.128E+00	0.3323	-6.150E-03
Solution uranium enrichment (wf)	1.500E-05	-7.664E-05	>0.50	negligible
Solution temperature (deg C)	1.260E+01	8.590E-04	>0.50	negligible
Scattering box 4 X position in room (cm)	1.000E+00	-3.582E-03	0.1275	-3.582E-03
Scattering box 4 Y position in room (cm)	1.000E+00	-5.538E-03	8.026E-02	-5.538E-03
Scattering box 4 Z position in room (cm)	1.000E+00	-1.556E-04	>0.50	negligible
Scattering box 4 block orientation (deg)	1.000E+00	-1.207E-02	0.3551	-1.207E-02
Scattering box 4 Al mounting plate thickness (cm)	2.887E-02	6.905E-02	>0.50	negligible
Scattering box 4 Al mounting plate density (g/cm^3)	3.500E-01	1.296E-02	>0.50	negligible
Scattering box 4 Ni foil thickness (cm)	1.155E-02	-3.315E-01	>0.50	negligible
Scattering box 4 Ni foil radius (cm)	1.443E-02	-5.489E-02	>0.50	negligible
Scattering box 4 Ni foil mass (g)	1.156E-02	-7.015E-03	>0.50	negligible
Scattering box S235JR density (g/cm^3)	4.250E-01	-7.222E-03	>0.50	negligible
Scattering box S235JR Mn content (wf)	3.300E-03	-1.082E+00	>0.50	negligible
Scattering box S235JR C content (wf)	4.007E-04	-8.836E-02	>0.50	negligible
Scattering box S235JR Cu content (wf)	1.296E-03	6.821E-01	>0.50	negligible
Standard concrete thickness (cm)	2.887E-02	-3.050E-03	>0.50	negligible
Standard concrete density (g/cm^3)	1.150E-01	2.570E-02	>0.50	negligible
Standard concrete H content (wf)	5.000E-05	-6.443E+00	>0.50	negligible
Standard concrete Si content (wf)	5.000E-05	-3.228E-01	>0.50	negligible
Standard concrete Al content (wf)	5.000E-05	-4.926E-01	>0.50	negligible
Standard concrete Fe content (wf)	5.000E-05	-4.075E-01	>0.50	negligible
Standard concrete Cl content (wf)	5.000E-05	2.000E+00	>0.50	negligible
Standard concrete Ca content (wf)	5.000E-05	-9.618E-01	>0.50	negligible
Standard concrete Mn content (wf)	5.000E-05	-2.150E+01	>0.50	negligible
Magnetite concrete thickness (cm)	2.887E-02	2.470E-03	>0.50	negligible
Magnetite concrete density (g/cm^3)	1.950E-01	-1.427E-02	>0.50	negligible
Magnetite concrete H content (wf)	5.000E-05	-1.090E+01	>0.50	negligible
Magnetite concrete Si content (wf)	5.000E-05	-4.334E-01	>0.50	negligible
Magnetite concrete Al content (wf)	5.000E-05	-1.498E+00	>0.50	negligible
Magnetite concrete Fe content (wf)	5.000E-05	3.675E-02	>0.50	negligible
Magnetite concrete Cl content (wf)	5.000E-05	2.941E+02	>0.50	negligible
Magnetite concrete Ca content (wf)	5.000E-05	3.522E-01	>0.50	negligible
Magnetite concrete Mn content (wf)	5.000E-05	-8.271E+00	>0.50	negligible
Lead shield thickness (cm)	2.887E-02	-1.621E-01	1.338E-02	-4.678E-03
Lead shield density (g/cm^3)	4.500E-02	-1.463E-01	5.243E-02	-6.585E-03
Lead shield Ni content (wf)	7.550E-07	1.045E+02	>0.50	negligible
Lead shield Fe content (wf)	2.850E-07	9.642E+01	>0.50	negligible
Lead shield Cr content (wf)	1.625E-08	-7.526E+02	>0.50	negligible
Lead shield Bi content (wf)	2.050E-04	8.537E-03	>0.50	negligible
Lead shield Al content (wf)	8.000E-08	-6.775E+02	>0.50	negligible
Lead shield Ag content (wf)	1.500E-05	-4.747E+00	>0.50	negligible
Total experimental uncertainty absolute (σ_{tot}^d)				1.323E-01
Total experimental uncertainty relative				0.0723