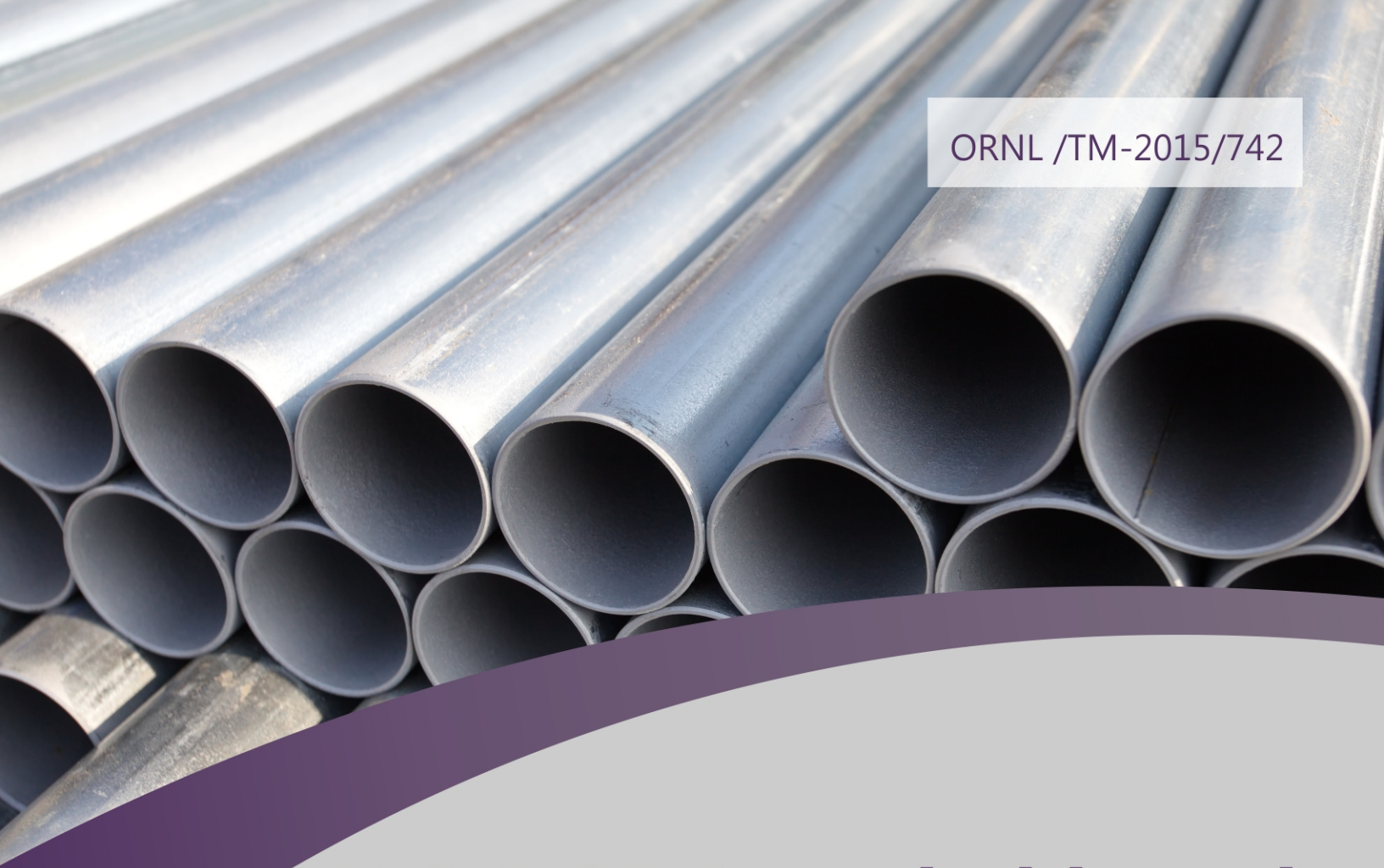

ORNL /TM-2015/742

U.S. DOE Roundtable and Workshop on Advanced Steel Technologies:

Emerging Global Technologies and R&D Opportunities

December 2015

Prepared by: Energetics Incorporated
For: Oak Ridge National Laboratory
and the U.S. Department of Energy

**Approved for public release.
Distribution is unlimited.**

DOCUMENT AVAILABILITY

Reports produced after January 1, 1996, are generally available free via the U.S. Department of Energy (DOE) Information Bridge.

Web site http://www.osti.gov/bridge

Reports produced before January 1, 1996, may be purchased by members of the public from the following source.

National Technical Information Service
5285 Port Royal Road
Springfield, VA 22161
Telephone 703-605-6000 (1-800-553-6847)
TDD 703-487-4639
Fax 703-605-6900
E-mail info@ntis.gov
Web site http://www.ntis.gov/support/ordernowabout.htm

Reports are available to DOE employees, DOE contractors, Energy Technology Data Exchange (ETDE) representatives, and International Nuclear Information System (INIS) representatives from the following source.

Office of Scientific and Technical Information
P.O. Box 62
Oak Ridge, TN 37831
Telephone 865-576-8401
Fax 865-576-5728
E-mail reports@osti.gov
Web site http://www.osti.gov/contact.html

This report was prepared as an account of work sponsored by an agency of the United States Government. Neither the United States Government nor any agency thereof, nor any of their employees, makes any warranty, express or implied, or assumes any legal liability or responsibility for the accuracy, completeness, or usefulness of any information, apparatus, product, or process disclosed, or represents that its use would not infringe privately owned rights. Reference herein to any specific commercial product, process, or service by trade name, trademark, manufacturer, or otherwise, does not necessarily constitute or imply its endorsement, recommendation, or favoring by the United States Government or any agency thereof. The views and opinions of authors expressed herein do not necessarily state or reflect those of the United States Government or any agency thereof.

ORNL/ TM-2015/742

Advanced Manufacturing Office

U.S. DOE Roundtable and Workshop on Advanced Steel Technologies: Emerging Global Technologies and R&D Opportunities

December 2015

Prepared by
Energetics Incorporated
Prepared for
OAK RIDGE NATIONAL LABORATORY
Oak Ridge, Tennessee 37831-6283
Managed by
UT-BATTELLE, LLC
for the
U.S. DEPARTMENT OF ENERGY, Advanced Manufacturing Office
under contract DE-AC05-00OR22725

Preface

This report is based on the proceedings of the *U.S. DOE Roundtable and Workshop on Advanced Steel Technologies Workshop* hosted by Oak Ridge National Laboratory (ORNL) in cooperation with the U.S. Department of Energy's (DOE's) Advanced Manufacturing Office (AMO) on held on June 23, 2015. Representatives from industry, government, and academia met at the offices of the National Renewable Energy Laboratory in Washington, DC, to share information on emerging steel technologies, issues impacting technology investment and deployment, gaps in research and development (R&D), and opportunities for greater energy efficiency. The results of the workshop are summarized in this report. They reflect a snapshot of the perspectives and ideas generated by the individuals who attended and are not all-inclusive of the steel industry and stakeholder community.

Acknowledgements

Special thanks are extended to Mark Johnson and David Forrest of AMO, who delivered remarks to frame the workshop objectives and inspire discussions. Thanks also go to Richard Sussman, Enhanced Technology Services, who moderated the Roundtable sessions.

The workshop organizers also wish to thank those who presented informative briefings on the status of relevant technologies and new products and key challenges: Larry Kavanaugh, American Iron and Steel Institute (AISI); Jeffrey Myers, Midrex Technology; John Simmons, CarbonTec Energy Corporation; Joe Vehec, AISI; and Robert Hyers, Boston Electrometallurgical.

ORNL and AMO gratefully acknowledge the valuable ideas and insights contributed by all of the stakeholders who participated in the workshop. Their contributions will help to define current and emerging opportunities for advanced technologies for steel processing and manufacturing. A complete list of participants is provided in Appendix A.

Workshop planning and execution were conducted under the direction of Patti Garland, ORNL, and David Forrest, AMO. Energetics Incorporated provided assistance with planning, facilitation, and report preparation.

Table of Contents

Preface ii
Acknowledgements ii
Table of Contents iii
1.0 Introduction 1
Overview 1
Role of Steel in the Economy and Energy Sector 1
Economic Value 1
Energy and Resource Implications 2
Meeting Flow and Objectives 3
Roundtable 3
Workshop 3
Organization of the Report 4
2.0 Review of Emerging and State of the Art Technologies 5
2.1 Current State of Emerging Technology 5
2.2 Investment Considerations for Emerging Technologies 9
Business Factors 10
Technical Feasibility 11
Raw Materials and Product Requirements 12
3.0 Challenges for Emerging Steel Technologies 13
4.0 Steel Technology Research and Development Gaps 15
Next Big Things 15
Research and Development Needs 16
5.0 Steel Product R&D Opportunities 18
Overview of New Steel Products and Applications 18
R&D Needs for New Steel Products 19
6.0 Steel Industry Emerging Technologies Global Inventory 20
Appendix A. Participants 22
Appendix B. Workshop Agendas 23
Appendix C. Advanced Technologies for Iron and Steel: A Review of Global Developments 25
Appendix D: Acronyms 30

1.0 Introduction

Overview

The Advanced Manufacturing Office (AMO) partners with private and public stakeholders to improve U.S. competitiveness, save energy, create high-quality domestic manufacturing jobs and ensure global leadership in advanced manufacturing and clean energy technologies. AMO's R&D projects explore novel energy-efficient, next-generation materials and innovative process technologies that impact a wide range of manufacturing industries. Through its Congressional budget, AMO has continued to support advanced materials manufacturing R&D, which includes issues such as steel, nanomaterials, insulation, and critical materials. In support of AMO and other DOE programs, the Oak Ridge National Laboratory (ORNL) conducts R&D to develop a wide variety of advanced materials and materials processing techniques.

AMO and ORNL are interested in obtaining perspectives on the emerging technology landscape for steel and the opportunities for breakthrough R&D. This includes new production technologies as well as cross-cutting areas like high performance computing, which could be highly applicable to steel. The knowledge gained will be valuable future R&D portfolios are developed and planned.

Role of Steel in the Economy and Energy Sector

Economic Value

Steel is a vital international manufacturing product that is important for many applications, including construction (residential, commercial, and transportation), transportation, machinery, heavy equipment, and containers, among countless others. The industry directly employs more than two million people worldwide with an additional six million people in support practices. Including industries such as construction, transportation, and energy, the steel industry is a source of 50 million jobs worldwide.

Globally, 1,705 million short tons of steel were produced in 2012, with production growing at an annual rate of by 3.9% since 2010.[1] The United States produced 88.7 million short tons of raw steel in 2012 (up from 80.5 million short tons in 2010) while operating at about 75.2% of estimated capacity.[2] In 2014, U.S. steel shipments totaled 98 million tons; the largest consumers are construction (40 percent) and automotive (25 percent). [3]

---

[1] "World Steel in Figures 2013." World Steel Association (WSA). Accessed on September 22, 2014. https://www.worldsteel.org/dms/internetDocumentList/bookshop/Word-Steel-in-Figures-2013/document/World%20Steel%20in%20Figures%202013.pdf

[2] "Steel Statistical Yearbook 2013." WSA. Accessed on September 5, 2014. http://www.worldsteel.org/dms/internetDocumentList/statistics-archive/yearbook-archive/Steel-Statistical-Yearbook-2013/document/Steel-Statistical-Yearbook-2012.pdf.

2012 *Minerals Yearbook: Iron and Steel [Advance Release 2014].* Reston, VA: USGS, September. http://minerals.usgs.gov/minerals/pubs/commodity/iron_&_steel/myb1-2012-feste.pdf

[3] *Profile of the American Iron and Steel Institute.* 2015. Washington, DC: AISI. Accessed 10-13-15. https://www.steel.org/~/media/Files/AISI/Reports/FINALprofile15low.pdf

Energy and Resource Implications

As the fifth largest energy-consuming U.S. manufacturing sector in 2010, the iron and steel industry consumed 1,359 TBtu of manufacturing primary energy; about 1000 TBtu of that is fuel (see Figure below).[4,5] The steel industry has worked to lower energy consumption for decades, and has achieved a 32 percent reduction in energy intensity and a 37 percent reduction in greenhouse gas intensity since 1990. Cost remains a strong driver for reducing the energy intensity of iron production; energy is generally 20% or more of the cost of making steel. [6]

Steel is also a critical component of the energy supply sector. Steel is vital for oil and gas pipelines, electricity generation and transmission, and a multitude of energy-related parts and equipment. The generation of renewable energy also relies on many steel components. In wind turbines, steel is the main material used in the gears, casings, and towers. In wave and tidal energy generation, a steel pile is the main component of the turbine because of its ability to withstand the challenges of the marine environment. In addition, there are many other structural and tangential uses of steel that enable renewable energy.

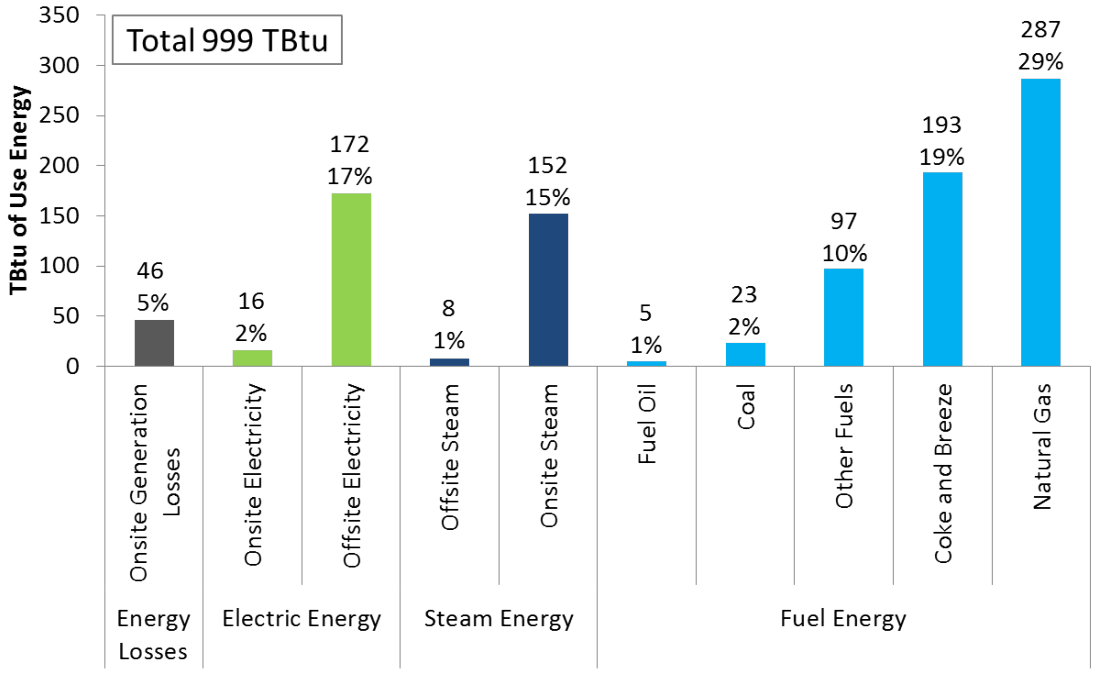

Point of Use Energy in the Steel Industry, 2010 (adapted from DOE 2015[5])

[4] Manufacturing Energy Consumption Survey 2010. U.S. Department of Energy, Energy Information Administration, 2013.
[5] Bandwidth Study on Energy Use and Potential Energy Saving Opportunities in U.S. Iron and Steel Manufacturing. U.S. Department of Energy, 2015. Accessed October 5, 2015. http://www.energy.gov/sites/prod/files/2015/08/f26/iron_and_steel_bandwidth_report_0.pdf
[6] *Profile of the American Iron and Steel Institute.* 2015. Washington, DC: AISI. Accessed 10-13-15. https://www.steel.org/~/media/Files/AISI/Reports/FINALprofile15low.pdf

All steel can be recycled; its reuse saves significant energy and raw materials. Today steel is the most recycled material – more tons each year than aluminum, paper, glass and plastic combined.[7] The overall recycling rate of steel is 81 percent based on recent data from the Steel Recycling Institute through 2013. Over 75 million tons of domestic steel scrap went into steelmaking furnaces in 2013.

Meeting Flow and Objectives

To gain new insights on emerging steel technology and its potential for energy and economic impacts, AMO hosted the *Roundtable and Workshop on Advanced Steel Technologies – Emerging Global Technologies and R&D Opportunities* on June 23, 2015 in Washington, DC. At this event, steel industry participants were asked for their perspectives on advanced technologies, with a focus on primary steelmaking. In addition, advanced steels and alloys and potential new products were discussed to gain insights on the R&D needed to support these materials as well as their potential impacts.

The event was structured around two separate sessions – a morning Roundtable with leading steel industry representatives, followed by an afternoon Workshop eliciting broader participation from industry, academia, and government. Agendas for both meetings are provided in Appendix B. The scope and objectives of each session are summarized below.

Roundtable

The Roundtable focused on gaining the industry perspective on newly emerging steel technologies, their prospects, lessons learned from implementation, and current and future investment challenges. Major topics for the Roundtable included:

- Progress on newly emerging steel technologies and products
- Compelling reasons to invest in technology and factors for selection of technologies in today's competitive environment
- Gaps and hurdles for private investment new technology
- Technical and operational barriers encountered with deployment of technology at operational scales

Workshop

The Workshop portion of the event focused on R&D gaps and opportunities from a broad perspective. The overall theme was to identify the 'next big things' in steel production and processing and the R&D needed to enable development and eventual deployment. Major topics included:

- Foundational R&D needs to enable breakthroughs and accelerate emerging technologies
- Cross-cutting capabilities (e.g., High performance computing (HPC), smart/advanced sensing and controls, modeling/simulation, sustainable manufacturing technologies)
- High impact product development opportunities and associated R&D needs

[7] *2013 Steel Recycling Rates.* 2015. Washington, DC: Steel Recycling Institute. Accessed 12-21-15. http://www.recycle-steel.org/recycling-resources/steel-recycling-rates.aspx.

In addition, a forthcoming report, *Steel Industry Emerging Technology Global Inventory*, was reviewed and discussed to identify gaps and elicit insights on which are most likely to succeed and those with the greatest potential.

Organization of the Report

This report is organized around the major topics of discussion noted above. The perspectives gained from the Roundtable and Workshop are combined for ease of flow and readability.

Report sections summarize the major points and themes emerging from each session. These include:

- *Current state of emerging technology* – status updates from developers and users of technologies that have promise for significant impacts on iron and steelmaking. A separate section is provided on participant's review of a global inventory of emerging technologies.
- *Investment considerations for emerging technology* – the factors considered by producers in selecting new technology.
- *Challenges for emerging technology* – some of the obstacles encountered in conducting R&D and moving technology into practical commercial operations.
- *Steel technology R&D gaps* – includes research to accelerate development and adoption of the 'next big things' and emerging technologies, including foundational and cross-cutting R&D topics such as modeling and simulation, sensors, and infrastructure.
- *New steel products* – an overview of emerging products and identified R&D needs.

Note that the views presented here are a reflection of the participants in attendance; they are not intended to be all-inclusive of the views of the steel industry and stakeholder community.

The Appendices provide a list of workshop attendees and acronyms used in this report.

2.0 Review of Emerging and State of the Art Technologies

A number of technologies have emerged that are already making a difference in the steel industry. There are lessons to be learned from deployment of these technologies, particularly in terms of investment considerations, challenges in start-up and operation, and impacts on existing plants and products. The status of a few of the most notable of these technologies, as well as the investment considerations identified that guide selection of emerging technologies, are summarized below.

2.1 Current State of Emerging Technology

Status updates on some emerging technology developments were provided by workshop participants.

Direct Reduced Iron (DRI) – Shaft Furnace Method

Presentation by: Jeffrey Myers, Midrex Technologies.

- **Technology Description:** In the shaft furnace DRI method, iron ore pellets or lump iron ore are introduced at the top of a vertical shaft. As the pellets fall they are heated and reduced by a counterflowing mixture of natural gas and recycled gas from the reduction furnace. The most common technologies for DRI production are the Midrex and HYL III processes, both of which employ shaft furnaces. Shaft furnace processes are highly energy efficient and can produce cold and hot DRI as well as hot briquetted iron (HBI).
- **Current Status:** The shaft furnace method is well commercialized with 70 modules in operation around the world. According to a June 2015 report, world DRI production was 74.55 million tons in 2014.[8]
- **Challenges:** Current challenges include carbon dioxide (CO_2) sequestration, i.e., handling the produced CO_2. Commercial market challenges include maintaining the intellectual property (IP) rights with future developments.

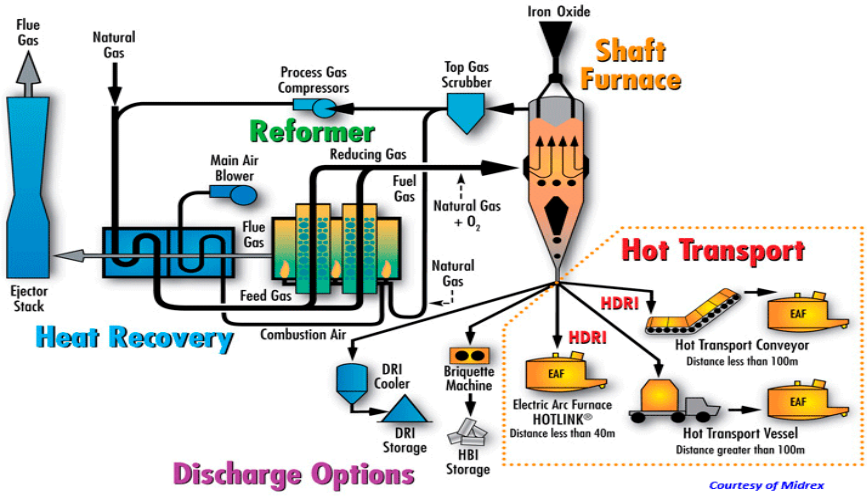

The Midrex Shaft Furnace Process

Source: "Midrex Process." Industrial Efficiency Technology Database. Accessed December, 2015. http://ietd.iipnetwork.org/content/midrex%C2%A9-process

[8] "2014 World Direct Reduction Statistics." Midrex. Audited by World Steel Dynamics. Published June 23, 2015. http://www.midrex.com/assets/user/media/MidrexStatsbook20141.pdf

Direct Ironmaking with Bio-Derived Carbon

Presentation by: John Simmons, CarbonTec Energy Corp.

Wood waste can be used as a carbon source for ironmaking.

- **Technology Description:** This technology uses biomass as a low carbon iron reducing agent instead of coke or coal. The E-Iron Nugget technology was developed by Michigan Technical University and produces pig iron grade nuggets of 95-96% iron and 2-3% carbon. The use of a linear hearth furnace instead of a rotary hearth furnace allows for minimal downtime in case of the need for damaged hearth refractory replacements. Drying is the only pre-processing required for the biomass.[9]
- **Current Status:** A 100,000 metric ton per year demonstration plant to be located in Jamestown, North Dakota has been proposed. A facility at this location would be able to take advantage of nearby rail lines and use local sugar beet residue as the biomass source.[10]
- **Challenges:** Biomass availability, handling, and quality have yet to be evaluated to sustainably support demonstration or commercial scale iron production. Additionally, regulatory uncertainty surrounding biomass use and its qualification for EPA credits could impact competitiveness

High-Intensity Flash Ironmaking Process

Presentation by: Joe Vehec, AISI.

Lab-scale Flash Reactor at the University of Utah

Source: Vehec, Joseph. "A Novel Flash Ironmaking Process". AISI/University of Utah. Published May 6-7, 2014. http://energy.gov/sites/prod/files/2014/06/f16/3-AISI_AMO_RD_Project_Peer_Review_2014.pdf

- **Technology Description:** This project is an ongoing research project by AISI and the University of Utah, funded by the DOE AMO. The process may use natural gas, hydrogen, or syngas in a suspension or flash-type furnace to heat and reduce iron ore concentrates. The high temperatures (1300°C – 1600°C) and use of ore fines in the process eliminate the sticking and particle fusion found in traditional shaft or fluidized-bed furnaces. The process could reduce energy consumption up to 20% over traditional blast furnaces by using iron oxide concentrates that do not require pelletization or sintering.
- **Current Status:** A bench reactor is currently

[9] Simmons, John (CarbonTec Energy Corporation). "E-Iron Nugget Process." Canadian Institute of Mining, Metallurgy and Petroleum. Published May 13, 2015. http://www.cim.org/en/Publications-and-Technical-Resources/Publications/Proceedings/2015/6/304634/304744

[10] Ibid.

being installed at the University of Utah to test the process. Over 18 to 24 months, beginning in the fall of 2015, the bench scale reactor will be evaluated with a goal of achieving 95% metallization at 1.5 times the theoretical minimum of reducing gas. If successful, AISI is expecting to seek partners to construct an industrial pilot plant.[11]

- **Challenges:** Some of the challenges include scaling-up to production levels, achieving the high processing temperatures required, managing defects and quality control, achieving sufficient throughput, and optimizing controls.

Direct Reduced Iron (DRI) – Rotary Hearth Furnace (RHF) Method

Presentation by: Jeffrey Myers, Midrex Technologies

- **Technology Description:** A rotary hearth furnace consists of a flat, refractory hearth rotating inside a stationary high temperature, circular tunnel kiln. The RHF feed consists of a composite agglomerate of briquettes or pellets made from iron ore concentrates or iron bearing wastes and a carbon source such as pulverized coal. Three RHF processes, FASTMET, FASTMELT, and ITmk3, are variants of the FASTMET process, which produces hot or cold DRI. The FASTMELT process includes a melter and separates ash and sulfur to produce a purer hot metal.[12] The U.S. Department of Energy supported the pilot-scale development of the ITmk3 process, which reduces, melts, and separates the agglomerate feedstock into high purity iron nuggets in only ten minutes.[13]

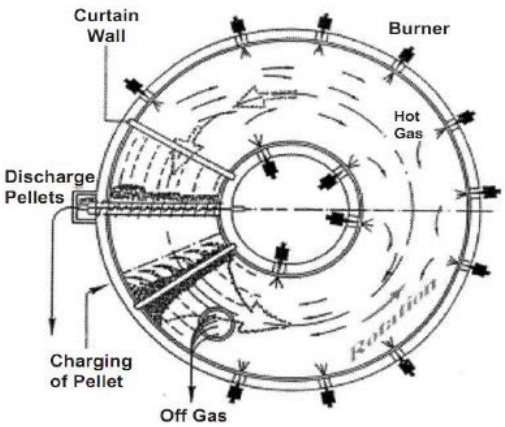

Rotary Hearth Furnace Schematic
Source: "Technology of Low Coal Rate and High Productivity of RHF Ironmaking." American Iron and Steel Institute. 2002. http://steeltrp.com/PDFs/9810.pdf

- **Current Status:** The FASTMET process has primarily been employed for the recycling of steel mill waste in Japan. In 2010, the first commercial 500,000-ton annual capacity plant employing the ITmk3 process commenced operation in Hoyt Lakes, Minnesota as part of a joint venture between Steel Dynamics and Kobe Steel. In 2015, Steel Dynamics announced they would be idling the plant for two years due to the low price of imported pig iron.[14]
- **Challenges:** Competition from higher productivity, lower cost production processes represents a significant challenge faced by RHF technologies. Additionally, commercial scale operation of the ITmk3 process has faced compliance issues regarding water quality standards.

[11] "A Novel Flash Ironmaking Process." U.S. Department of Energy, Advanced Manufacturing Office. Published July, 2013. http://www1.eere.energy.gov/manufacturing/rd/pdfs/flash_ironmaking_process_factsheet.pdf
[12] McClelland, James (Midrex Technologies, Inc.). "A Layman's Guide to the Midrex and Kobe Steel Rotary Hearth Furnace Technologies." Published 2008. http://www.midrex.com/assets/user/media/Laymans_guide_to_RHF.pdf
[13] "ITmk3: High-Quality Iron Nuggets Using a Rotary Hearth Furnace." U.S. Department of Energy, Advanced Manufacturing Office. Accessed December 22, 2015. http://energy.gov/eere/amo/itmk3-high-quality-iron-nuggets-using-rotary-hearth-furnace
[14] "Mesabi Nugget, Mining Resources plants on Iron Range idled for at least two years." Duluth News Tribune. Published May 26, 2015. http://www.duluthnewstribune.com/business/mining/3752716-mesabi-nugget-mining-resources-plants-iron-range-idled-least-two-years

Direct Reduced Iron (DRI) – Paired Straight Hearth (PSH) Method

Presentation by: Joe Vehec, AISI

- **Technology Description:** AISI and McMaster University explored this emerging technology as part of a DOE/AMO funded research project that completed in 2013. The PSH process uses non-metallurgical coal as a reductant to convert iron oxides and steelmaking byproduct oxides to DRI pellets that can be used in EAF or smelting processes. A multi-layer, 120 mm tall, pellet bed made from iron oxides, coal, and binders is built up and contained within a continuous pair of moving linear tunnel hearth furnaces that run in opposite directions. The combination of radiant heat absorbed into the pellet bed from the hearth and a strongly reducing CO atmosphere results in a highly metalized DRI product.[15]
- **Current Status:** For the project, researchers designed a batch furnace to examine heat transfer effectiveness, the role of volatiles, and the mechanics of charge and discharge. The decision to build a 50,000 annual ton demonstration facility is expected in 2016.
- **Challenges:** Research has focused on addressing several challenges including technology integration issues related to materials handling and waste control systems, pellet and DRI quality, and long-term furnace performance and reliability. These challenges will need to continue to be considered as the technology progresses for use at larger scales.

Molten Oxide Electrolysis (MOE)

Presentation by: Robert Hyers, Boston Electrometallurgical

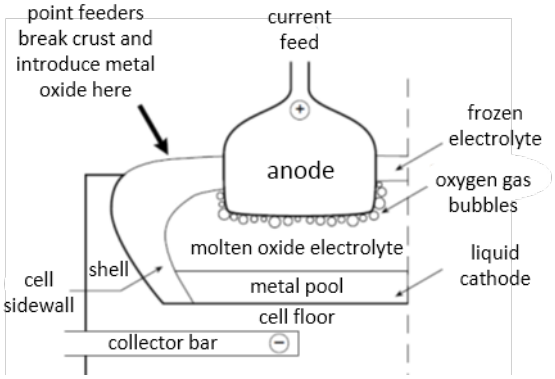

Molten Oxide Electrolysis Schematic
Source: "Technology Roadmap Research Program for the Steel Industry: Final Report." Page 20. American Iron and Steel Institute. Published December, 2010. https://steel.org/~/media/Files/AISI/Making%20Steel/TechReportResearchProgramFINAL.pdf

- **Technology Description:** MOE is an extreme form of molten salt electrolysis that allows the transformation of iron ore into metal and gaseous oxygen using only electrical energy. A liquid iron pool acts as the cathode beneath an electrolyte medium of iron ore dissolved in a molten oxide mixture at 1600°C. An inert Cr-Fe anode is dipped into the solution and an electric current causes O_2 gas to be produced at the anode and iron produced as liquid metal at the cathode. The MOE process is carbon free and produces tonnage oxygen with commercial value.[16]
- **Current Status:** The DOE Industrial Technologies Program provided funding in 2007 to evaluate the feasibility of the technology.[17] A 2013 SBIR Phase I project funded by the National Science Foundation (NSF) enabled longer-duration testing of the inert anode than was possible in the

[15] "Paired Straight Hearth Furnace." U.S. Department of Energy, Industrial Technologies Program (now known as the Advanced Manufacturing Office). Published May, 2011. http://energy.gov/sites/prod/files/2013/11/f4/paired_straight_hearth_furnace.pdf

[16] Sadoway, D. and Ceder, G. "TRP 9956 Final Report – A Technical Feasibility Study of Steelmaking by Molten Oxide Electrolysis." AISI/DOE Technology Roadmap Program. Published December, 2009. http://www.osti.gov/scitech/servlets/purl/974198-MLiqvq/

[17] "Technical Feasibility Study of Steelmaking by Molten Oxide Electrolysis." U.S. Department of Energy, Industrial Technologies Program (now Advanced Manufacturing Office). Published September, 2008.

laboratory cell.[18] Beginning in September of 2015, Phase II will evaluate MOE at larger scales and will include a clean steel test. A commercial cell is anticipated to be about 1000 times the laboratory size and will operate as a continuous feed process producing liquid metal.[19]

- **Challenges:** Work is needed to determine how high the current density can grow to determine the limits of cell productivity. At scale operational parameters become more complex. As such, it will be important to determine the best options to pursue in terms of feedstock, product specifications, and operational effectiveness.

Advanced High Temperature Steel

Presentation by: Gary Cola, SFP Works

- **Technology Description:** This heat treatment process, known as Flash Processing or Flash Bainite, seeks to provide a low cost alternative to expensive alloying treatments for producing high strength, readily weldable steels with suitable ductility for automotive and other applications. The process operates in a thermal cycle of less than 10 seconds, in which "off the shelf" steels are rapidly heated to temperatures near 1200 °C and then quickly quenched with a water spray.[20] Ohio State researchers found that the rapid heating and cooling of the process limit carbon migration and carbide dissolution, resulting in a unique microstructure containing bainite, martensite, and carbides that boosts the ductility and strength of the steel.[21]
- **Current Status:** Flash Bainite is an early commercial technology. In 2014, the U.S. Department of Energy awarded two SBIR grants to explore Flash Processing: one to design, produce, and test lightweight automotive parts; and another to develop a retained austenite phase in a 1600-1900 MPa steel at 20-25% elongation. In 2015, Flash Bainite became part of the American Lightweight Materials Manufacturing Innovation Institute's Lightweight Innovations for Tomorrow program.[22]
- **Challenges:** Additional testing of the technology is needed to validate the use of Flash Processed steel for various applications. A U.S. Army review noted that quench cracking and intergranual cracking should be addressed before the product is used as a form of military body armor. Additionally, increased manufacturing maturity is needed to broaden technology deployment.

2.2 Investment Considerations for Emerging Technologies

[18] "SBIR Phase I: Revolutionary Process for Producing Primary Iron and Ferrochromium." National Science Foundation. Federal Award ID Number, 1345571. Award date November 13, 2013. http://www.nsf.gov/awardsearch/showAward?AWD_ID=1345571

[19] "SBIR Phase II: A New Molten-Oxide Electrochemical Process for Producing Primary Iron and Ferrochromium." National Science Foundation. Federal Award ID Number, 1534664. Award date September 15, 2015. http://www.nsf.gov/awardsearch/showAward?AWD_ID=1534664

[20] "What is Flash Bainite?" Flashbainite.com. Accessed December, 2015. http://www.flashbainite.com/about/what-is-flash-bainite.html

[21] Gorder, P. "A new way to make lighter, stronger steel – in a flash." The Ohio State University. Published June 2011. http://researchnews.osu.edu/archive/flashsteel.htm

[22] "High strength steel "to go" from Flash Bainite." American Lightweight Materials Manufacturing Innovation Institute, Lightweight Innovations for Tomorrow. Published September 29, 2015. http://lift.technology/high-strength-steel-to-go-from-flash-bainite/

A number of questions were posed to gain understanding of the investment considerations for emerging steel production and processing technologies. Some major elements emerged as having the most influence on investment decisions, including economics, overall technical feasibility and reliability, raw materials availability and type, and product requirements.

Key Questions

- *What are the compelling reasons to invest in or select these technologies?*
- *When looking to select state-of-the-art technology, what are the key factors?*
- *What are the gaps and hurdles for private R&D investment in these technologies?*

Business Factors

A first consideration is whether investing in the technology makes good business sense. First cost is a key driver and not a simple scenario, as it includes many factors. All factors contribute to determining if there is a reasonable return on investment. Some of these are outlined below.

- ***Reliability of Benefits***: These include improved energy efficiency, reduced environmental load, optimization of resources, and others. For investment to be attractive, companies must realize a value from technology adoption by either selling technology or via cost savings. The ability to reliably predict impacts down the road is a necessity.
- ***Profitability****:* Profitability of a plant is a driving force in investment decisions. While there are drivers to use less energy and decrease CO_2 emissions, a company still needs to be profitable. The blast furnace is highly productive and still hard to beat when compared with new technology.
- ***Economics/Cost Savings*****:** These can come from reduced energy or material or resource requirements, operational savings, etc. For example, is there low fixed costs for sustained operation with the new technology? Value that is added downstream can be a deciding factor. Other factors that influence the cost base must also be considered, e.g., labor, energy, greenfield versus brownfield project, changes in raw materials, etc.). Cost savings must also be predictable and projected 10 to 30 years down the road – facilities and assets have long lifetimes. The impact of technology on product cost is another consideration
- ***Business Advantages***: Does the technology provide a competitive advantage? Is the technology disruptive? Is it backed by good management? These are critical but more subjective considerations.
- ***Investment Costs***: This includes capital and related first costs as well as potential capital avoidance. For example: Even if the technology is expensive, does investment help avoid capital costs elsewhere, such as not having to upgrade or expand the coke plant? Does it allow use of fines as a raw material, or lessen the need for auxiliary equipment? Start-up costs are a major issue; technology investment is risk-averse with respect to start-up. Projects are also started under one set of business conditions, which can change over time (e.g., cost and availability of energy or materials)
- ***Corporate Culture***: A positive and/or innovation-oriented investment culture, when coupled with favorable business conditions, can promote new technology adoption.
- ***First versus Nth Plant***: Early stage emerging technology (e.g., first plant/process) may not be perfect or cost-effective right off of the shelf. Changes and modifications to achieve sustained operation at the targets desire could require some investment up front and the magnitude of those costs are a consideration.

- ***Scaling***: Scaling-up is expensive—broad buy-in from leadership is needed to move technology from demonstration to scale-up. Good engineers are needed to work with entrepreneurs to ensure ideas are scalable. The company has to make a commitment to ride out the scale-up process long enough to get products and measure results.

Technical Feasibility

Closely connected to economics is the technical feasibility of the technology and how it fits with the plant configuration. While technology may be feasible and provide improved processing or other benefits, there are technical considerations that may negatively impact overall costs. Will it impact product quality or reduce or increase agility and flexibility? Is it suitable for the geographic location? Some of the major themes identified for technical feasibility are summarized below.

- ***Equipment reliability***: The longevity, reliability and operating conditions of the equipment (hot, corrosive, and erosive) are important, especially in terms of how they impact maintenance and downtime.
- ***Scaling and Siting****:* The technology must be scalable, and potential to be scaled up or down to meet the needs of the end user. Before scaling, time and research will be needed to optimize the technology and requirements can change during this time. Plant location, geography, climate, etc. are also considerations. This includes ensuring accessibility to sustainable resources and a supply chain as well as accounting for site-specific environmental and other conditions.
- ***Process and Feedstock Flexibility****:* Process and product flexibility and agility can be important (e.g., ability to change or maintain current product slate, changes in raw materials, etc.). One consideration is if the process is dynamic, i.e., can it respond to changing markets. An advantage of the electric arc furnace (EAF), for example, is that it can scale up or down. New technology with this flexibility is attractive; it provides opportunities for optimization with changing product slates.
- ***Technical need***: In some cases, an emerging technology can help to meet a major technical challenge or problem, providing a compelling reason to invest. Challenges first need to be identified, then a technology solution identified or developed to meet that challenge.
- ***Product quality***: New technologies that offer improvements to product quality, reduce defects or rejects, or provide new functionalities to products could be desirable.
- ***Energy***: Energy is a major technical and cost factor. Considerations include the cost and availability of the required energy source as well as energy flexibility (i.e., capability for fuel switching). Future trends such as a carbon tax or penalty, or pricing volatility, are also hard to predict but certain to impact investment decisions made today. For example, stable supplies of low-cost shale gas are available now, but the long term outlook is less certain.
- ***Sustainability***: This refers to energy, environmental, and societal sustainability of the technology. For example, is it more environmentally sound than the conventional process? Does it reduce the energy and carbon footprint?

Raw Materials and Product Requirements

Optimization of raw materials and the ability to maintain or exceed product requirements are critical to introduction of any new technology into steelmaking and production lines. Some of the major considerations include:

- ***Raw material inputs****:* The flexibility, availability and type of material inputs required can dictate technology selection. This includes, for example, whether or not scrap and fines can be used/reused in the process, if available, and/or if the technology allows for flexibility in material inputs. In integrated steelmaking, the consistency and access of reused materials (e.g., fines) is a consideration.
- ***Product mix:*** The product slate has a strong influence on technology selection. The product must meet or exceed the customer requirements of strength, toughness, color, cleanliness, durability, etc.
- ***Alternative raw materials***: With an emerging technology where new material inputs are proposed, technical feasibility (e.g., bio-availability of low carbon biomass) and maintaining or improving profitability are both strong drivers. The same is true of technologies calling for the increased use of fines or scrap – the quality, consistency, and access to the inputs will be a factor.

3.0 Challenges for Emerging Steel Technologies

A number of technical and operational barriers were identified that impact both the continued development and implementation of emerging steel technologies. The main themes are summarized in Table 3-1.

Table 3-1. Challenges for Adoption of Emerging Steel Technologies
Technical Issues
• Limited ways to effectively measure operational impacts and benefits of new technology; baselines are needed to justify investment decisions and support technology performance. • Lack of fundamental data for life cycle analysis. • Developing process lines to accommodate new alloys.
Technology Demonstration
• Insufficient demonstration of technology. • Demonstrations that initially do not show better performance than conventional technology due to non-optimization (which takes time); difficulty comparing new technologies to those that have had decades of improvements (e.g., blast furnace). • Finding a host site to test the technology in an existing process so that it can be moved toward plant trials and commercialization. • Reluctance to fund the first plant and/or the $50 million demonstration plant.
Institutional
• Availability of engineers coming out of universities that are trained in steel production and operation. • No single company, university or organization capable of resolving the common technical problems (and limited involvement of investor community). • Nexus of organizational, economic, and cultural philosophies in the very mature steel industry that lead to slow technology adoption; wait and see attitudes for new technologies and products. • Companies confronted with many options and factors to consider (without an integrated view of technology). • Lack of industry high level vision and goals (e.g., 25%, 50% improvement) around which to make technology decisions. • Insufficient university research on the hard, applied problems; disconnect between university research (sky high level) and applied R&D; incentivizing applied research at universities.
Making the Business Case
• Unproven performance with first versus nth plant (e.g., emissions, impact on regulations, controls, etc.); bringing the technology to full execution can be an enormous technical and business challenge; expectations for success that are unrealistic for first plants. • Economics that stop or delay projects late in the R&D cycle. • Ability to capture success metrics of new technology and translate it into commercial stage to support a business case. • Proving that the economics of new technology match or exceed that of a mature, conventional technology in an operating plant. • Large unknowns in scale-up and capital investment combined with small capital budgets and uncertain performance. • Lack of sufficient risk mitigation strategies for new technology investments. • Disconnect between business and researcher decisions (i.e., industry having to cut projects quickly).

Table 3-1. Challenges for Adoption of Emerging Steel Technologies
Resources
• Getting investments past the Valley of Death to commercial installations. • U.S. developing lagging behind European Union (EU) and Asian technology R&D; huge funding gap and level of effort between U.S. (small projects) compared to Asia/EU (large, multi-partner projects that incorporate supply chain). • Locking up IP in government-funded projects (e.g., in Europe IP stays with company); other countries tying up IP in the United States. • Length of time and resources to conduct R&D, coupled with external factors like energy, regulations, business conditions, etc. leading to slow progress. • Sustained support (public or private) where breakthroughs are needed for current game-changing technologies.
Regulatory
• Regulatory uncertainty for some technologies (e.g., use of biomass and incentives). • Increasing and changing regulations – many new regulations appearing in the last decade that impact current and future technology. • Understanding and communicating to regulators how new technology will influence emissions.

4.0 Steel Technology Research and Development Gaps

While the steel industry is relatively mature, new products, product requirements, and processing needs continue to emerge. Opportunities exist to develop and adopt new technologies that could improve energy efficiency, productivity, and competitiveness. Some of the new concepts on the horizon and the research and development needed to support these emerging technologies are summarized below. The ideas presented reflect the opinions of the experts attending the Roundtable and Workshop, and are not necessarily all inclusive of the steel industry.

Key Questions

- *What are the 'next Big Things' on the horizon for steel?*
- *What R&D is needed to enable development of emerging technologies and next generation concepts on the horizon?*
- *What are the technological needs for developing crosscutting capabilities, e.g. High Performance Computing (HPC), smart/advanced sensing and controls, modeling/simulation, sustainable manufacturing technologies?*

Next Big Things

Some of the 'next big things' with the potential to significantly impact the way steel is produced include:

- ***Big data:*** Innovations and breakthroughs in the ability to collect, store, analyze, interpret, and act on large amounts of real-time process data (e.g., sensors and meters highly interconnected with process equipment and downstream production). This could lead to enormous improvements in process, energy, and materials efficiency, as well as cost optimization. Data collection in steel processing can be challenging in some of the severe environments encountered.
- ***Smart steel manufacturing***: Next generation information technology where sensors are integrated with data analytics and modeling within and across plants and business units, allowing for enterprise-wide controls and decision-making. Such systems are envisioned to eventually extend to the steel supply chain, creating a 'systems of systems.' Open, shared and secure computing platforms will be at the core of smart manufacturing.
- ***Predictive modeling, simulation, and visualization (MSV):*** This will enable creation of virtual process design and optimization, speeding scale-up and supporting comparative decision-making among technology options. When combined with HPC, MSV can reach much higher levels of applicability and process more variables. MSV could potentially support better life cycle analysis and the ability to design processes based on product requirements. Modeling is also being used to develop high strength steels – greater strides are possible in product development through advances in MSV.
- ***Alternative feedstocks / material inputs:*** Use of bio-derived carbon for ironmaking, including biomass wastes.
- ***Electric Arc Furnace:*** Developing new technology for arc-based production of clean steel (e.g., have we reached a plateau with regards to EAF development due to contamination or are technology breakthroughs possible?).

Research and Development Needs

R&D needed to accelerate development and adoption of emerging steel technology spans a number of technical areas, including energy efficiency and resources, environmental performance, waste recovery and management, and improved processing technologies. Table 4-1 summarizes the R&D needs for advanced steel technologies. Cross-cutting capabilities such as modeling and simulation and sensors and controls also require more development to meet needs for big data and efficient smart manufacturing systems. In addition, demonstration and deployment activities are needed to help move viable technology into scale-up and practical application. Collaboration on new technology is a growing trend. Working together on common problems can lead to tremendous innovation. It was suggested that industries need to work together on cross-over problems like sensors.

Table 4-1. R&D Needs for Advanced Steel Technologies

Energy Efficiency and Energy Sources
• Better ways to generate hydrogen and electricity that are cost-effective and environmentally sound (e.g., electrolysis). • Goal-driven research to develop energy-saving, high performance factories and increase life of technology, with three to five-fold improvements over conventional facilities.
Environment and Waste
• Productive, useful ways to manage and utilize byproduct CO_2. - Calcium oxide to capture CO_2 and regenerate materials that are valuable, capturing 50% to 60% of CO_2. - CO_2-based processes that work in conjunction with steel production. - CO_2 as a feedstock for the chemical industry. - Processes to capture CO_2 in industries where it's a common issue (e.g., steel, cement, or power). • Research for sustainable processes/products that utilize all potential wastes where possible. - Industries within regions work to utilize waste. - Waste from one industry as inputs for another industry.
Steel Processing Technologies
• Simplified processes to reduce energy footprint and costs. • Clean steel R&D: Contaminant reduction, compositions to reduce contaminants (e.g., high strength steel), close the gaps in fundamental knowledge for inclusions. • Fundamental issues such as hydrogen embrittlement with high strength steels. • Casting technologies for high strength steels; work is ongoing but not open-sourced (proprietary).
Process and Operational Models
• Application-driven MSV to optimize process operations (e.g., reduce down time) and lower risk of implementing new concepts (predictive performance models). • Integration of MSV with sensors to provide dynamic modeling and smart steel manufacturing systems. • Models to support bio-derived carbon ironmaking processes; computer modeling could provide new comparative information on advantages in performance and materials. • Modeling and simulation for feedstocks planning, not just process data measurement. • Leverage open source models for clean steels; inclusion modeling. • Modeling of refractory designs (versus furnace designs).

Table 4-1. R&D Needs for Advanced Steel Technologies
Computational Design and Scale-Up
• Integrated MSV with HPC to create virtual processes that help scale-up emerging technologies (e.g., new furnace); laboratory modelers work along-side industry experts. • Integrated design and development along the entire supply chain (and cross-contamination) from production to rolling to recycle. - Design and predictive methods to address the entire life cycle of new materials. - Lifecycle analysis and prediction to support products. • Utilization of the materials by design legacy to develop better processes and products. • Better input data for process and operational models (measuring and collecting). • Scale-up and integration of design and processes using MSV.
Technology and Model Validation and Infrastructure (Data, Computing Platforms)
• Validation of computational process modeling. - Integration of statistical models, multi-variant algorithms, models and data. - Combination of MSV tools and experiments to create real-time validated models. • Data collection methods to validate technologies, models and performance. - Data at laboratory and pilot scales (less risky scale-up). • Basic research to obtain kinetic data, followed by multi-variate statistical modeling to determine which data is most important. • Algorithms for multi-variate analysis of iron and steel production (rather than univariate). • Accessible HPC user facilities at laboratories and universities. • Leveraging of modeling, simulation, and visualization computing resources in national laboratories and universities; partnership between industry and resources (e.g., LLNL, ORNL, ANL) to help create formalized structure for industry to effectively partner with labs.
Sensors and Controls
• Ways to take advantage of operational big data: process measurement controls and analytics for quality, operations, maintenance, problem cause and effect, etc. - Meters, gauges, and sensors, coupled with models and databases. - Process measurements for high temperature liquids and solids in tough environments (temperature, dust, dirt, corrosive, etc.). • Collaboration among manufacturers on cross-over development of survivable sensors to meet specific challenges and environments in steelmaking, and for data collection. • Feedback on new materials to identify potential for new/improved sensors.
Demonstration and Deployment
• Deployment activities to move technology out of labs to market (collaboration with IP protection) • Proven scale-up of new technology - Large-scale production demonstration facility. - Companies working jointly on a scale-up facility (right blend of competition and collaboration) - Methods for assuring quality control during scale-up. • Benchmarking U.S. technologies against global technology and performance. • Accelerated deployment via large showcase demonstrations for viable technologies (pre-scale-up) that are not moving forward to help prove the value proposition. • Consortia to support new processes and technology development where it makes sense.
Ancillary
• Skilled workforce pipeline – means to attract more graduates to work in steel and stay in the United States; fueling creation of domestic jobs.

5.0 Steel Product R&D Opportunities

There are a number of high impact product development opportunities (e.g., high strength steel alloys, light-weighting, others) that are emerging and could impact future steel processing and manufacturing. Some of the trends are outlined below.

Overview of New Steel Products and Applications

Steel is used in a myriad of products across the economy, from transportation to buildings, bridges, heavy industrial equipment, and a wide spectrum of tools and machines. New steel products are getting a lot of attention in the automotive market, as auto makers look to reduce weight to help meet new fuel economy standards. Most of the fuel efficiency will be achieved through changes to the engine and drive train but lightweighting will also play a part.[23] The steel industry needs to work with customers on how best to use advanced high strength steels (AHSS) to achieve weight reduction goals.

- Automakers are looking to the steel industry to make extrude-able steels. There is an opportunity for high strength steel to replace aluminum in the suspension, and for steel in bar products.
- A consortium of five universities is currently working on taking high strength automotive steel to the construction market, especially as building designs change. Construction is an area that is ripe for research, especially in floors and frames. For example, how can the industry produce more energy efficient steel studs?
- The steel industry is looking at building innovations such as modularization, increased use of panel systems, and other concepts, particularly with a view to sustainability and efficiency; new steel products can have a major role.

Advances in the strength and formability of steel are also still possible—two new third generation AHSS are being developed and lab heats have hit goals already. Ultimately, high strength steels need to be applied in the best way to optimize the product functionality and cost.

New steel train wheels

On the process side, manufacturers must learn how to get the product through the mill; this will require some revolutionary changes as well as step changes. Welding and lubrication technology, for example, may need to be refined to work with the new AHSS. Raw materials and energy options are both important considerations for process technology decisions. In the future, steelmakers generally assume there will be a choice of technology for the hot end of the plant.

[23] Overview based on remarks delivered by Lawrence W. Kavanaugh, President, Steel Market Development Institute (SMDI) and Treasurer, American Iron and Steel Institute.

Overall there is a bright future for new steel products and U.S. leadership in the global steel industry. Research is needed in a number of areas to continue progress toward advanced and stronger, more versatile steels.

R&D Needs for New Steel Products

A number of research areas were identified for accelerating development of advanced steels and new steel products. R&D needs related to materials compatibility, alloy processing, and product design were among those that emerged.

Materials Compatibility

Joining and welding of dissimilar metals has been an issue with many new materials and continues to be a challenge. In addition, joining of metals to other materials (e.g., ceramics) can arise in some applications. New high strength steels may also have a very different composition compared to existing legacy equipment and process fluids, which can create corrosion or other issues. Refractories may also not be compatible. Issues of compatibility need to be addressed to enable use of advanced steel products.

Alloy Processing

Research is needed to develop new alloys, understand alloy mechanisms, and improve processing (e.g., heat treating). Some alloy mechanisms are very much in their infancy and much can be done to improve those.

The performance of two stage dual step steels (dual-phase steel structures with different morphologies) has been promising and these may have a lot of potential. With small changes in alloy and processing, steels with very different properties are produced. Steel is unique in this sense and this advantage can be exploited.

Steel building framework

However, there are fundamental casting issues arising with new high strength steels; with the distribution of elements in these steels influencing casting characteristics. Thus, there exists an opportunities for inclusion engineering for specific properties in highly alloyed steels. This would involve manipulating the inclusions to create a positive effect on finished properties.

Product Development and Integration

Technologies and R&D are needed to enable flexibility for both processing and products (e.g., coatings). There are growing trends toward combining product and process designers and engineers to develop carbon and specialty steels. This will also support integration of new products into the supply chain, which is essential for acceptance. More and better advanced product development may also be possible via innovation production processes and feedstocks. Life cycle analysis as well as oxide metallurgy were raised as necessary to support new and emerging products. While this may be more fundamental research, it is essential for applied product development and integration. Information and techniques emerging from the Materials Genome

Initiative should also be leveraged into new steels and products. There is a wealth of information being developed that could open up new opportunities for advanced steels and product design.

The growing big data revolution will require many new types of sensors, including those that can work in harsh environments. There are opportunities to take new materials such as AHSS and tie these into sensor applications.

Strategic Products

There is also an opportunity for creation of new products centered on domestic competitive advantages (e.g., shale gas, large private markets, or domestic resources). This could support the promotion of a 'better than imports' perception of U.S. products.

Steels for Power Generation

The power generation industry wants to operate at higher temperatures – above 1300°C – which means using steels as opposed to nickel based alloys. This creates opportunity for new steels in high temperature applications. Increasing penetration in these markets is strategic but could be challenging.

Refractories and Energy-Related Materials

There is still an opportunity for technologies for energy reduction, e.g., refractories. Aggressive goals may be needed to drive innovation.

6.0 Steel Industry Emerging Technologies Global Inventory

A preliminary report on *Advanced Technologies for Iron and Steel: A Review of Global Developments* was presented for review. This document catalogs recently-developed technologies that reduce the energy intensity of the major processes associated with the manufacture of iron and steel. North American, South American, European, and Asian sources were examined to identify the research developments most likely to reduce energy intensity.

Key Questions

- *What emerging technologies are missing from the inventory?*
- *What technologies listed are on hold or no longer being pursued and why?*
- *Which of these technologies have the potential to move into commercial use?*

Some of the key takeaways from the review are summarized below. A summary table of technologies covered by the inventory was provided to participants for review and is included in Appendix C.

- ***Natural gas-based technology***– Supplies of inexpensive natural gas are fostering technology developments in DRI in the United States. Natural gas is changing the entire configuration of the blast furnace. Examples include charging DRI into the blast furnace, using syngas or coke oven/ shaft gas for DRI, etc. Internationally, gas-rich nations are building around their domestic gas supplies. For example, there is now a small and growing steel industry in the Middle East based on abundant natural gas.
- ***Hot charging of DRI*** – The U.S. is behind in hot charging of DRI (to EAF) —wherein DRI is not allowed to cool before being quickly added into an EAF— for reduction in energy consumption as well as

CO_2. Significant energy savings are possible with this strategy. Mexico, the United Arab Emirates, and other countries are currently doing work in this area.

- ***Predictive modeling and advanced controls*** – Computational technologies and more sophisticated sensors and controls are beginning to find increasing use in steel primary production and downstream in rolling and finishing. Examples include the virtual blast furnace, online mechanical property prediction and measurement, inclusion analysis, and hot strip mill modeling.
- ***Energy and heat recovery*** – A number of technologies are emerging to recover energy as well as valuable metals from off-gases and byproducts or slag. One example is a heat recovery process which converts streams to hydrogen and CO_2 to precipitate valuable metals from slag.
- ***Carbon capture*** – Innovative technologies and processes are emerging specifically to capture and sequester or utilize carbon. Notable examples include siting syngas fermentation vessels near steel processing to make ethanol, and capturing CO_2 with an aqueous sodium solution to produce carbonates and bicarbonates that can be used by other industrial sectors.

Appendix A. Participants

Jeffrey Becker, U.S. Steel
Richard Bradshaw, Boston Electrometallurgical
Larry Cavanagh, American Iron and Steel Institute (AISI)
Isaac Chan, U.S. Department of Energy
Gary Cola, SFP Works
David Forrest, U.S. Department of Energy
Vinny Gupta, InNow, LLC
Robert Hyers, Boston Electrometallurgical
Mark Johnson, U.S. Department of Energy
Fred Mannion, U.S. Steel
Jeffrey Myers, Midrex Technologies
Ronald J. O'Malley, Missouri University of Science & Technology
Chaubal Pinakin, Arcelor Mittal USA
Bruce Pint, Oak Ridge National Laboratory (ORN L)
Chris Pistorius, Carnegie Mellon University
Joe Poveromo, Raw Materials & Ironmaking Global Consulting
Ron Radzilowski, AK Steel
Regis Conrad, U.S. Department of Energy
Sridhar Seetharaman, University of Warwick
John Simmons, CarbonTec Energy Corporation
Jason Smiley, Nucor Steel
John Speer, Colorado School of Mines
Eric Stuart, Steel Manufacturers Assn
Richard Sussman, Enhanced Technology Services
Joe Vehec, AISI
Chenn Zhou, Purdue University Calumet

Appendix B. Workshop Agendas

Roundtable on Advanced Steel Technologies

Emerging Global Technologies and R&D Opportunities

Hosted by the DOE/EERE Advanced Manufacturing Office

Aerospace Building, 901 D Street, S.W., 9th Floor, NREL Conference Rooms

Washington DC | Morning, 9 am to Noon, June 23, 2015

AGENDA

Time	Activity
8:30 – 9:00 AM	Arrival and Greeting
9:00 – 9:15 AM	Welcome • David Forrest, EERE AMO – Introduction and Objectives
9:15 –10:30 AM	Roundtable Review of Emerging/State of the Art Technologies *Moderator: Richard Sussman, Enhanced Technology Services, LLC* Midrex DRI, ZR Process, Utah Flash Ironmaking, ITmk3 (Mesabi), Paired Straight Hearth, Direct Ironmaking with Bio-derived Carbon, Molten Oxide Electrolysis, others TBD *Brief updates on molten oxide electrolysis and bio-derived carbon reduction, followed by facilitated discussion* • What is the current state (e.g., pilot plants) and prospects for these technologies? • What are the compelling reasons to invest in these technologies, i.e., when looking to select state-of-the-art technology, why pick one over the other? What are some of the major factors influencing your technology selection? • What are the lessons learned to date? What technical and operational barriers must be overcome?
10:30 – 10:45 AM	Break
10:45 – 11:50 AM	Roundtable Discussion Continues • Have technical, economic, and other potentials been realized? • What R&D is needed to improve performance? • What are the gaps and hurdles for private investment in new technology? • What cross-cutting capabilities (e.g., High Performance Computing, advanced sensing/controls, sustainable technologies, etc.) are needed to support innovation?
11:50 – Noon	Next Steps and Closing

Workshop on Advanced Steel Technologies

Emerging Global Technologies and R&D Opportunities

Hosted by the DOE/EERE Advanced Manufacturing Office

Aerospace Building, 901 D Street, S.W., 9th Floor, NREL Conference Rooms

Washington DC | 1 – 4:30 PM, June 23, 2015

AGENDA

Time	Activity
12:30 – 1:00 PM	Arrival and Greeting
1:00 – 1:10 PM	Welcome • David Forrest, EERE AMO – Introduction and Objectives
1:10 – 2:00 PM	Steel Industry Emerging Technologies Global Inventory *Facilitated Discussion* • What emerging technologies are missing from the inventory (or should be removed)? • Which of these technologies have the greatest potential, including cross-cutting technologies?
2:00 – 3:15 PM	R&D Gaps and Opportunities *Facilitated Discussion* What are the Next Big Things and what R&D is needed to enable their development? *Steel Production/Processing Technologies* • *Brief update on Flash Bainite process* • What are some of the foundational R&D needs to enable breakthroughs and accelerate development of emerging steel production and processing technologies (e.g., smart steel manufacturing, DRI, carbon/ironmaking alternatives, molten oxide electrolysis, etc.)? *Cross-Cutting Capabilities* • What are the technological needs for crosscutting capabilities, e.g. High Performance Computing (HPC), smart/advanced sensing and controls, modeling/simulation, sustainable manufacturing technologies?
3:15 – 3:30 PM	Break
3:30 PM – 4:20 PM	Product Development Opportunities *Facilitated Discussion* • Overview of new steel products and applications: Larry Kavanaugh, AISI • What are the emerging high impact product development opportunities (e.g., high strength steel alloys, light-weighting, others) and associated R&D needs or technical gaps?
4:20 – 4:30 PM	Next Steps and Adjourn

Appendix C. Advanced Technologies for Iron and Steel: A Review of Global Developments

Summary Table of Emerging Technologies for Major Steel Processes (Note: Updated Table to be published in the *Advanced Technologies for Iron and Steel Inventory*.)

	Technology and Key Developers	Primary Innovation(s)	Maturity
Cokemaking	**Biomass in sintering** *(CSIRO-Australia)*	Replacement of coke breeze with biomass-derived charcoal	Demonstration
	Single-chamber-system coking reactors *(European Cokemaking Technology Center)*	Replacement of multi-chamber systems with one large-volume oven	Demonstration
	Production of Carbonite product to replace met coke *(Coal Technology Corporation)*	Continuous coke production using various grades of coal Recovery of by-products as liquid and gaseous fuels	Pilot
	Super coke oven *(Japan Iron & Steel Federation)*	Combination of cokemaking best practices in a single process to reduce energy consumption and emissions	Full-scale example
	Coal moisture control *(Nippon Steel)*	Drying of coal with waste heat gases	Development
Ironmaking	**Forest Vue coke oven reduction** *(Forest Vue Research)*	Produces iron in coke oven.	Research
	Molten oxide electrolysis *(Boston Electrometallurgical, ULCOS Consortium, MIT)*	Reduction of iron ore concentrates and production of molten steel in a single unit Use of carbon-free anodes, which facilitates the production of oxygen gas at the anode	Development
	Flash ironmaking *(University of Utah/AISI)*	Convertible reducing gas sources: methane, syngas, or hydrogen Use of ore fines skips pelletizing/briquetting step	Development
	Hydrogen ironmaking *(POSCO)*	Replacement of carbon monoxide (CO) reducing atmosphere with H_2 Generation of H_2 using water electrolysis	Research
	COURSE50 *(multiple Japanese steel companies)*	Replacement of CO reducing atmosphere with H_2 Incorporation of carbon capture and sequestration (CCS) Better waste heat recovery	Research
	Paired straight hearth furnace *(McMaster University/AISI)*	Ability to use high-volatility coals and BOF sludge or mill scale to produce DRI pellets	Pilot
	Tecnored process *(Tecnored)*	Ability to use multiple solid carbon sources; drying/ volatilizing integrated into process High productivity; 40 minute residence time	Pilot
	Cyclone converter furnace *(Corus)*	Smelting reduction process that combines pre-reduction and final combustion in one vessel	Pilot
m ak	**Romelt furnace** *(Moscow Institute)*	Single-stage furnace with intense agitation	Pilot

	Technology and Key Developers	Primary Innovation(s)	Maturity
	MXCOL-MIDREX *(Midrex)*	Use of gasified coal as syngas to reduce iron	Pilot
	Dios process *(Japan Coal Energy Center)*	Direct iron reduction in fluidized beds before smelting	Pilot
	FASTMET/ FASMELT *(Kobe Steel/Midrex)*	Use of mill waste and a variety of coal to produce high-metallic-value DRI Flexibility carbon and iron-oxide-based feed material Use of hot DRI in a specially designed EAF Short reduction time of less than 12 minutes	Development
	Iron carbide processes *(International Iron Carbide/ Nucor)*	Production of iron carbide for use as a feed in steelmaking	Pilot
	Metallic iron nodule *(Nu-Iron Technologies/ University of Minnesota)*	Development of nodule reduced iron in an experimental linear straight hearth	Pilot
	Plasma blast furnace *(ULCOS Consortium)*	Heating of reducing gases with plasma (up to 5000°C)	Development
	IronArc *(ScanArc Plasma Technologies, with Ovako)*	Two-stage reduction process using heat from plasma generators and internal combustion of gases in reactor; alternative blast furnace configuration	Demonstration
	CarbonTec sustainable ironmaking using biomass *(CarbonTec Energy)*	Pig iron production using a straight car bottom furnace with biomass-based carbon resources. Low temperature drying of biomass.	Research
	Biomass injection into blast furnace *(Abo Akademi University-Finland)*	Replacement of fuel with biomass in BF	Development
	Sustainable steelmaking using woody biomass and waste oxides *(Carnegie Mellon)*	Use of a rotary hearth furnace (RHF) with biomass-based carbon sources	Research
	Oxygen-enriched air via membranes in blast furnace *(Air Products, Praxair)*	Oxygen permeable membranes	Demonstration
Steelmaking	**Solid-state steelmaking** *(Federal Fluminese University-Brazil; Pohang University-Korea, others)*	Use of a twin-roll strip caster followed by a decarburizing atmosphere to generate high-quality steel strips	Research
	Microwave EAFs *(Michigan Technological University)*	Production of molten steel directly from a shippable agglomerate of iron oxide fines, powdered coal, and fluxing agents using microwaves	Development
	Continuous horizontal sidewall scrapping *(SMS Siemag)*	Development of a continuous EAF charging method that loads from the side	Demonstration

	Technology and Key Developers	Primary Innovation(s)	Maturity
Steelmaking	**EPC system for side charging and scrap preheating** *(CVS Technology-Turkey)*	Design that allows continuous charging of preheated scrap into the EAF Separation of preheating and cold scrap charging; design permits operation with or without use of scrap preheating	Pilot
	Continuous Steelmaking Using Iron Carbide *(International Iron Carbide)*	Use of Fe_3C as feed material to EAF for steelmaking	Research
	Contiarc furnace *(ACIPCO, SMS Demag)*	Use of a submerged direct current (DC) electrode system with the slag above it to assist in scrap preheating	Full-scale example
	ECOARC *(JFE Engineering)*	Continuous heating and batch-tapping of scrap metal	Demonstration
	Rotary regenerators *(BMWi-Germany)*	Use of rotary regenerators for high-temperature applications	Research
	Optical EAF sensors *(Process Metrix/AISI)*	Accurate monitoring of the off-gases from EAF	Pilot
	Nitrogen control in EAF by DRI fines injection *(McMaster University/AISI, others)*	Injecting DRI fines into the melt to eliminate nitrogen	Development
Casting	**Continuous casting for EAF** *(University of Missouri-Rolla, others)*	Replacement of ladle metallurgy furnace with a continuous series of vessels	Research
	Mastering billet casting *(Centro Svillup Materiali-Italy, others)*	Online sensors to monitor the casting conditions	Research
	Integrated models for defect-free casting *(Aalto University-Finland, others)*	Computer modeling of the casting process	Research
	Optimal mold lubrication condition simulations *(Centro Svillup Materiali-Italy, others)*	Understanding of casting parameters that affect the ultimate surface properties of the steel	Research
	Innovative process technology for ingot casting *(VDEh-Betriebsforschungsintitut GmbH-Germany, others)*	Computer modeling of mold filling and solidification to improve ingot casting	Research
	Tundish heating technologies (cold tundish) *(Companhia Siderugica de Tubarao-Brazil)*	Use of a cold tundish Inductive heating of a tundish (not by combustion)	Pilot scale
Steel Rolling	**Thermochemical recuperation for steel reheating** *(Gas Technology Institute/AISI, others)*	Use of thermochemical recuperation, allowing for more efficient recovery of heat from flue gases	Development

	Technology and Key Developers	Primary Innovation(s)	Maturity
	Next-generation system for scale-free steel reheating *(E3M, ACL-NWO, others)*	Use of preheated or oxygen-enriched air to control flue gas Improves quality and yield of steel	Development
	Control of steel oxidation *(Centro Svillup Materiali-Italy, others)*	Research to limit steel oxidation with alternative combustion technologies	Research
	Traveling wave induction heater *(Ajax Tocco)*	Three-phase induction heaters that produce more uniform temperature distributions	Research
	High-temperature microporous insulation materials *(German Institute for Refractories and Ceramics)*	Innovative insulating materials with limited consumption in a furnace	Development
	Tubular regenerator burner system (ROREBS) *(VDEh-Betriebsforschungsintitut GmbH-Germany)*	Use of regenerative heat recovery with flat flame burners	Demonstration
	Direct flame impingement *(Gas Technology Institute)*	Flame jets are targeted at formed steel to reduce energy spent heating the target	Pilot
	Transverse flux induction heater *(Fives Celes-France)*	Efficient homogeneous heating of steels and alloys to 800°C Automatic operation of machine with regard to normal operational disturbances	Pilot
Steel Shaping/Forming	**Cold-forming predictive technology** *(Amet Italy SRL, others)*	Predictive tools of springback for HSS and UHSS to reduce development time	Research
	High Magnetic Field Processing *(Oak Ridge National Laboratory)*	Shift of phase field equilibria under high magnetic fields to reduce forming temperatures and refine grain structure	Research
	Flexible and cost-effective three-dimensional (3D) manufacturing *(Technical University of Dortmund-Germany, others)*	Novel forming processes to create 3D tubes from HSS and UHSS	Research
	Innovative packaging steel *(ArcelorMittal Mazieres, others)*	Improved adhesion of organic films by plasma surface treatment	Research
	Thixoforming *(ASCOMETAL, others)*	Casting using the properties of molten metal alloys to obtain blanks of complex shapes in only one stage	Early commercial
	Shorter spheroidizing annealing time *(Timken)*	Improved control of process parameter during spheroidized annealing	Single commercial plant
Steel Finishing	**Advanced zinc-based hot dip coatings** *(Centrol Ricerche Fiat-Italy, others)*	Research into zinc-based alloy coatings that are used to limit corrosion	Research
	High-emissivity annealing *(ASBL-???, others)*	Research into the iron oxide layer during the annealing process to decrease energy expenditures	Research

	Technology and Key Developers	Primary Innovation(s)	Maturity
	Ultra-fast cooling *(CMI Thermline Services-France, others)*	Pentane spray to reduce cooling time of steel strips	Research
	High-pressure water descaling *(Centro Svillup Materiali-Italy, others)*	High-pressure water jets to remove surface oxides	Research
	High-velocity impulse burner *(VDEh-Betriebsforschungsintitut GmbH-Germany)*	Novel impulse burners to increase convective heat flow	Research
	Flash bainite processing *(BainiteSteel)*	Rapid heating and cooling of steel to introduce morphological heterogeneity	Early commercial
	Quenching and Partitioning *(Colorado School of Mines, others)*	Process resulting in heterogeneous austenite and martensite steel microstructures	Development
	Super-hydrophobic surfaces with nanoscale and microscale features *(GE, Idaho National Laboratory)*	Use of spray-forming to generate the molds	Development
	Super-hydrophobic Coatings *(Oak Ridge National Laboratory)*	Low-cost super-hydrophobic coatings	Development
	Magnetron sputtering *(Argonne National Laboratory)*	Dense, highly uniform nanocomposite coatings	Development
Carbon Capture	**Advanced DRI with CCS** *(ULCOS Consortium, others)*	Reduction of solid iron in a reducing atmosphere of natural gas CO_2 is inherently separated in this process	Development
Carbon Capture	**Chemical absorption CCS** *(POSCO)*	Absorption of CO_2 into nitrogen-based solvent	Pilot
Carbon Capture	**Geologic sequestration of CO2 using BOF or EAF slag** *(AISI, others)*	CO_2 sequestration using processed slag to generate alkaline earth metal carbonates Use of exothermic process to speed reaction kinetics or as energy	Development
Carbon Capture	**Top gas recycling in blast furnaces** *(ULCOS Consortium, LKAB)*	Injection of O_2, resulting in CO-enriched off-gas Reduction in coke needed for reducing iron ore	Pilot
Carbon Capture	**HISarna with CCS** *(Corus, Rio Tinto, ULCOS Consortium)*	Direct hot-coupling of all core processes; no intermediate gas treatment, cooling, or de-dusting Recovery of off-gas heat for steam power	Pilot
Waste and Energy Recovery	**Heat recovery from BF slag** *(Japan Iron & Steel Federation, POSCO)*	Waste heat from slag for use in the BF or for power production Short reduction time of less than 12 minutes Reduction in water use and elimination of sludge production	Demonstration
Waste and Energy Recovery	**Heat recovery from smokestacks** *(POSCO)*	Recovery of heat from flue gases that can then offset steam generation	Pilot

	Technology and Key Developers	Primary Innovation(s)	Maturity
	High-temperature ceramic recuperators *(VDEh-Betriebsforschungsintitut GmbH-Germany)*	Novel materials for high-temperature, high-rate recuperators	Research
	Recovery of metals from pickling waste *(VDEh-Betriebsforschungsintitut GmbH-Germany)*	Nickel recovery from pickling waste	Research
	Recycling and reuse of BOF slag *(IMP/MTU, Westwood Land)*	BOF slag separated into three products, allowing greater iron recovery and recycling Use of low-grade iron by-product for acid mine neutralization	Pilot
	EAF off-gas heat recovery *(POSCO, Tenova)*	Use of high-pressure evaporative cooling system tubes designed for harsh EAF fume conditions to capture waste heat Use of steam accumulator tanks to even out steam production of the evaporative cooling system	Pilot
	Recycling of steel residues *(BFI, DK Recycling, Roheisen - Germany)*	Computer-aided control of recycling process parameters to reduce energy consumption	Pilot
	Recycling ladle slag *(Tata Steel)*	Recycling of ladle slag	Pilot
	Wireless sensor networks *(Andrews Industrial Controls, Oak Ridge National Laboratory)*	Robust reliable wireless sensor network to monitor processes and simplify data analysis	Early commercial-ization
New Steels	**High-strength hot dip galvanizing steel** *(ILVA SPA, others)*	New steel alloys consisting of silicon, boron, and aluminum Development of novel processing methods	Research
	HSS with a duplex microstructure *(Ford, Wayne State University)*	Low-alloy steels with high strength and toughness	Research
	NanoSteel *(NanoSteel)*	High-alloy steels with high strength and toughness	Development
	Alumina-forming austenite *(Oak Ridge National Laboratory)*	High-temperature oxidation resistance and good creep resistance through alumina surface formation	Development
	Steel foam *(Bodycote, Bofasco, others)*	Porosity in the steel structure, yielding steel foams	Pilot

Appendix D: Acronyms

AHSS	advanced high strength steel
AISI	American Iron and Steel Institute
AMO	Advanced Manufacturing Office
ANL	Argonne National Laboratory

BOF	blast oven furnace
CHP	combined heat and power
CO	carbon monoxide
CO_2	carbon dioxide
DOE	U.S. Department of Energy
DRI	direct reduced iron
EAF	electric arc furnace
EPA	U.S. Environmental Protection Agency
EU	European Union
HPC	high performance computing
LLNL	Lawrence Livermore National Laboratory
MIT	Massachusetts Institute of Technology
mm	millimeter
MOE	molten oxide electrolysis
MPa	Megapascal(s)
MSV	modeling, simulation and visualization
NSF	National Science Foundation
ORNL	Oak Ridge National Laboratory
PSH	paired straight hearth
R&D	research and development
RHF	rotary hearth furnace
TBtu	Trillions of British thermal units