FCRD Level 3 Milestone M3FT-15OR0203112: Build redesigned HFIR rabbit capsules and make ready for insertion for irradiation in HFIR

Fuel Cycle Research & Development

Prepared for
US Department of Energy
Nuclear Fuels Storage and Transportation Planning Project

Oak Ridge National Laboratory: Richard Howard
Joel McDuffee

Idaho National Laboratory: Maria Okuniewski

September 23, 2015

FCRD Number: FCRD Level 3 Milestone M3FT-15OR0203112

Approved for public release.
Distribution is unlimited.

This report was prepared as an account of work sponsored by an agency of the United States Government. Neither the United States Government nor any agency thereof, nor any of their employees, makes any warranty, express or implied, or assumes any legal liability or responsibility for the accuracy, completeness, or usefulness of any information, apparatus, product, or process disclosed, or represents that its use would not infringe privately owned rights. Reference herein to any specific commercial product, process, or service by trade name, trademark, manufacturer, or otherwise, does not necessarily constitute or imply its endorsement, recommendation, or favoring by the United States Government or any agency thereof. The views and opinions of authors expressed herein do not necessarily state or reflect those of the United States Government or any agency thereof.

SUMMARY

This report details the fabrication and delivery of two Fuel Cycle Research and Development irradiation capsules (FCRP20 and FCRP03), with associated quality assurance documentation, to the High Flux Isotope Reactor. The capsules and documentation were delivered by September 30, 2015, thus meeting the deadline for milestone M3FT-15OR0203112. These irradiation experiments irradiate metal parallelepiped specimens that may consist of various compositions including uranium metal, steel, etc. This document contains a copy of the completed capsule fabrication request sheets, which detail all constituent components, pertinent drawings, etc., along with a detailed summary of the capsule assembly process performed by the Thermal Hydraulics and Irradiation Engineering Group (THIEG) in the Reactor and Nuclear Systems Division. A complete fabrication package record is maintained by THIEG and is available upon request.

This page is intentionally left blank.

CONTENTS

SUMMARY i

LIST OF FIGURES v

LIST OF TABLES v

FUEL CYCLE RESEARCH & DEVELOPMENT 1

1. Introduction 1

2. Assembly Summary 1

3. Specimen Handling and Assembly of Ti-6Al4V Holder 2

4. Press-Fitting Gadolinium Sleeve into the Rabbit Containment 3

5. Final Containment Loading and Sealing 3

6. Attachments—Fabrication Request Sheets 5

This page is intentionally left blank.

LIST OF FIGURES

Figure 1. Second generation Fuel Cycle Research and Development capsule design (schematic). 1
Figure 2. Second generation FCRD capsule design (exploded view)..... 2
Figure 3. Cross-sectional view of holder assembly. 2
Figure 4. Loaded holder assembly. 2
Figure 5. Press-fitting gadolinium sleeve into rabbit capsule housing. 3
Figure 6. Final rabbit capsules as delivered to the HFIR. 4

LIST OF TABLES

Table 1. Capsule/holder loading details. 3

This page is intentionally left blank.

FUEL CYCLE RESEARCH & DEVELOPMENT

1. Introduction

This report details the initial fabrication and delivery of two second generation (parallelepiped specimen) Fuel Cycle Research and Development (FCRD) capsules and satisfies the requirements of M3FT-15OR0203112. These experiments were delivered to the High Flux Isotope Reactor (HFIR) by the September 30, 2015, the project milestone date. The goal of the irradiation testing is to obtain a fundamental understanding of the evolution of the microstructure of metal fuel materials as a function of elemental composition, temperature, and neutron fluence. This document contains a copy of the completed capsule fabrication request sheets, which detail all constituent components, pertinent drawings, etc., along with a detailed summary of the capsule assembly process performed by the Thermal Hydraulics and Irradiation Engineering Group (THIEG) in the Reactor and Nuclear Systems Division. A complete fabrication package record is maintained by THIEG and is available upon request.

2. Assembly Summary

Two capsules, identified as FCRP02, and FCRP03, were assembled for insertion into the HFIR for cycle 462. The capsule design consists of a Ti-6Al4V holder that may contain up to six specimens, SiC passive temperature monitors, or any combination of these two items. The holder is surrounded by a gadolinium sleeve. This subassembly is loaded into an Al-6061 “rabbit” style irradiation vehicle. The assembly process was broken into three distinct sections, listed below.

- Specimen handling and assembly of Ti-6Al4V holder
- Press fitting gadolinium sleeve into the rabbit containment
- Final containment loading and sealing

Figure 1 and Figure 2 show schematics for the capsule design.

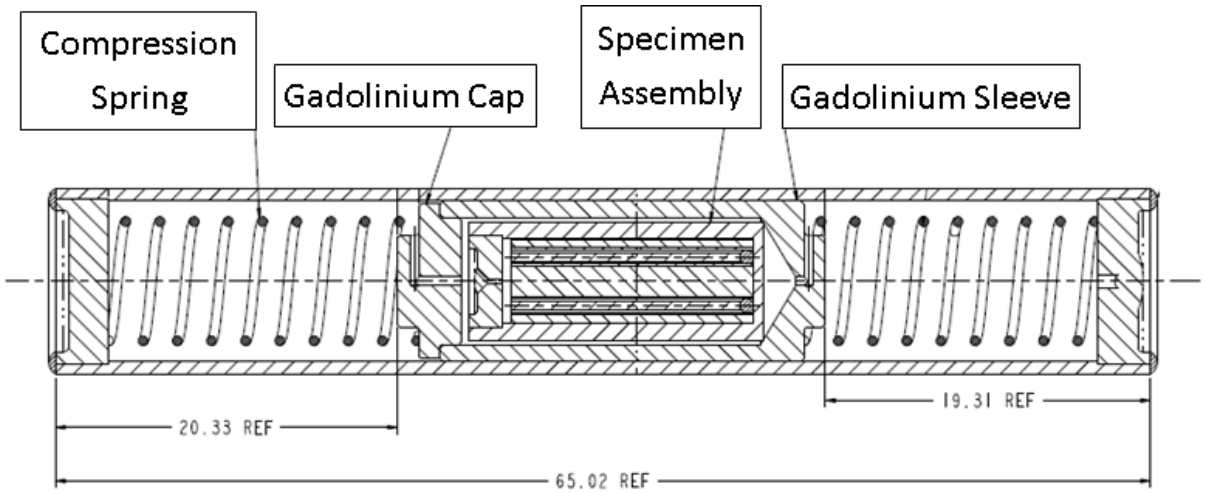

Figure 1. Second generation Fuel Cycle Research and Development capsule design (schematic).

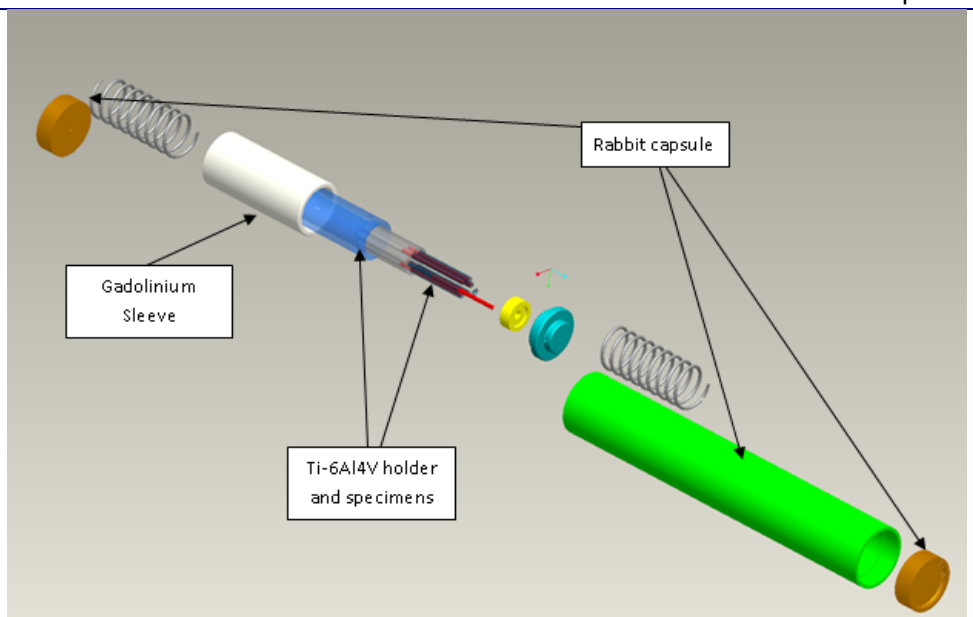

Figure 2. Second generation FCRD capsule design (exploded view).

3. Specimen Handling and Assembly of Ti-6Al4V Holder

The holder assembly consists of a holder and cap (inner containment), a molybdenum specimen container, zirconia beads, and zirconia buffers. These capsules also contain steel specimens supplied by M. Okuniewski of the Idaho National Laboratory. Dr. Okuniewski also provided specimen handling and loading support during the assembly of the holder. Each capsule container position was loaded with zirconia buffers, except the position occupied by the SiC passive thermometer (see Figure 3). A zirconia bead was also loaded into the single position containing a metal specimen. These ceramic parts (i.e. the bead and buffers) are used to isolate the specimens from the other metal components of the subassembly. Each capsule contained a single steel parallelepiped specimen and one thermometer, located in the 12 o'clock and 6 o'clock positions, respectively, to balance capsule heating and ensure loading symmetry. Figure 4 shows a loaded holder assembly. Table 1 details the holder loading details for each capsule. The loaded holders were welded and hermetically sealed with an internal helium atmosphere. All holders were tested with an ionization chamber to ensure the assemblies were adequately sealed.

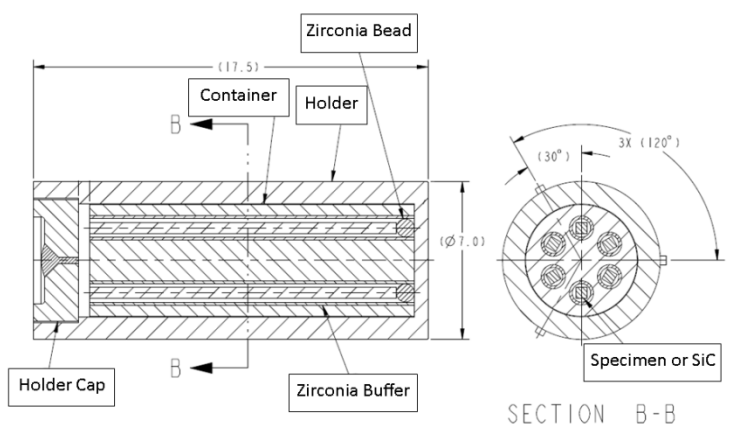

Figure 3. Cross-sectional view of holder assembly.

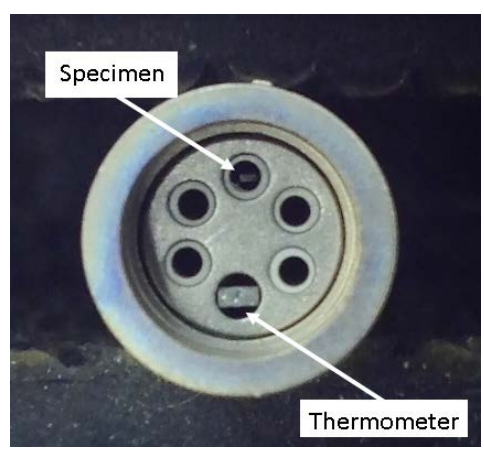

Figure 4. Loaded holder assembly.

Table 1. Capsule/holder loading details.

Capsule ID	Holder OD (mm)	Specimen ID	Design Temperature (°C)
FCRP02	7.30	H2	500
FCRP03	7.30	H4	500

4. Press-Fitting Gadolinium Sleeve into the Rabbit Containment

The gadolinium sleeve is an integral part of the capsule design because it shields the thermal neutron flux. The gap between the sleeve inner diameter and the Ti-6Al4V holder outer diameter determines the heat transfer to the capsule housing and the ultimate heat sink (i.e. the reactor coolant), and thus controls the specimen temperature. The gadolinium shield is press-fit into the aluminum housing to ensure the sleeve maintains good thermal contact. The holder subassembly is loaded into the plenum space inside the gadolinium sleeve. This is achieved by placing the housing into a brass cylinder and heating the two components to about 130°C. Once the system reaches equilibrium, the gadolinium shield is pressed into the housing. A 21 mm long stop is placed inside the housing to ensure the sleeve reaches the correct axial location inside the capsule housing. Figure 5 demonstrates the sleeve press-fitting operation.

Figure 5. Press-fitting gadolinium sleeve into rabbit capsule housing.

5. Final Containment Loading and Sealing

After the gadolinium shields were successfully loaded, the lower compression springs were installed and the lower housing end caps were electron beam welded to the housings. Preliminary nondestructive examination (NDE) was performed on the cap trepan welds to ensure weld joints were hermetically sealed. The Ti-6Al4V holder subassemblies were then inserted into the gadolinium sleeves, and the final compression spring was installed along with the top housing end cap. A second electron beam weld was made and preliminary NDE was performed on the second trepan weld. A final sealing weld, similar to that performed on the holder subassembly, was then made for each capsule, providing an inert helium

internal atmosphere for all capsules. A formal helium leak rate test and external hydrostatic compression test was performed on the capsules to ensure they were properly sealed. Upon completion of this final NDE, the capsule assembly was considered complete. THIEG engineering staff used the final loading and assembly data to perform the necessary analyses to ensure each capsule is bounded by existing HFIR safety basis calculations and meets the Oak Ridge National Laboratory Research Reactor Division's Experiment Authorization Bases Document, EABD-HFIR-2009-004 Rev. 11. With all required criteria met, the capsules were delivered to the HFIR for final quality assurance review and insertion for irradiation. Figure 6 shows the fully assembled rabbits ready for delivery to the HFIR.

Figure 6. Final rabbit capsules as delivered to the HFIR.

6. Attachments—Fabrication Request Sheets

Capsule Fabrication Request Sheet

Page 1 of 1
Date 9/23/2015

Capsule Number: FCRP02

Irradiation Conditions

Irradiation Location	HT	7
Design Temperature		500
First Cycle Goal		462
Irradiation Time		32 hrs.
Irradiation Charge Number		N/A
Holder diameter	7.30	mm (0.2874 in) at 20°C
Fill Gas		Helium

Approvals

	Request	Build
Performed by:	Rmn 9/22/15	JhRiley 9.22.2015
Checked by:	JhRiley 9.22.2015	Rmn 9/22/15

Capsule Fabrication

	Drawing	Rev.	Part	Material	Count	Comment	MAT IR	FAB IR	ID	Mass (g)
Housing	X3E020977A647	0	1	Aluminum 6061	1		20410	20410	96	3.9362
Top Cap	X3E020977A647	0	2	Aluminum 4047	1		20311	20411	15-12	0.5209
Bottom Cap	X3E020977A647	0	3	Aluminum 4047	1		20311	20412	41	0.5391
Sleeve	S13-12-FCRD01	0	2	Gadolinium	1		20273	20477	2K	5.2885
Sleeve Cap	S13-12-FCRD01	0	3	Gadolinium	1		20273	20478	2H	1.1429
Spring	S13-12-FCRD01	0	4	Stainless Steel	2		19877	20487	3 & 4	0.4550
Holder	S13-12-FCRD02	0	2	Gr 5 Titanium	1		20093	20474	2B	1.7600
Holder Cap	S13-12-FCRD02	0	3	Gr 5 Titanium	1		20093	20475	2F	0.1752
Bead	S13-12-FCRD02	0	4	Zirconium Oxide	5		20484	20484	5 total	0.0087
Specimen Container	S13-12-FCRD02	0	5	Molybdenum	1		20026	20476	3D	1.9989
Specimen	S13-12-FCRD02	0	6	Steel	1		20486	20486	H2	0.0057
									N/A	0.0000
Thermometry	S13-12-FCRD02	0	Note 10	SiC	1		19502	19502	2	0.0212
Buffer	S13-12-FCRD02	0	7	Zirconium Oxide	3		20274	20485	4	0.0336
									5	0.0334
									6	0.0338
									16	0.0339
									17	0.0338
Quartz Wool			N/A	Quartz	AR		20224	20224	1 total	0.0020

Assembly

	Drawing	Rev.	Comment
Assembly Drawing	S13-12-FCRD01	0	
Welding & Cleaning	X3E020977A646	0	
Fill Gas	Helium		

Capsule Fabrication Request Sheet

Capsule Number: FCRP03

Irradiation Conditions

Irradiation Location	HT	7
Design Temperature		500
First Cycle Goal		462
Irradiation Time		320 hrs.
Irradiation Charge Number		N/A
Holder diameter	7.30	mm (0.2874 in) at 20°C
Fill Gas		Helium

Approvals

	Request	Build
Performed by:	[illegible] 9/22/15	[illegible] 9.22.2015
Checked by:	[illegible] 9.22.2015	[illegible] 9/22/15

Capsule Fabrication

	Drawing	Rev.	Part	Material	Count	Comment	MAT IR	FAB IR	ID	Mass (g)
Housing	X3E020977A647	0	1	Aluminum 6061	1				93	3.9092
Top Cap	X3E020977A647	0	2	Aluminum 4047	1		20311	20411	15-14	0.5114
Bottom Cap	X3E020977A647	0	3	Aluminum 4047	1		20311	20412	43	0.5425
Sleeve	S13-12-FCRD01	0	2	Gadolinium	1		20273	20477	3K	5.2662
Sleeve Cap	S13-12-FCRD01	0	3	Gadolinium	1		20273	20478	3H	1.1566
Spring	S13-12-FCRD01	0	4	Stainless Steel	2		19877	20487	5 & 6	0.4758
Holder	S13-12-FCRD02	0	2	Gr 5 Titanium	1		20093	20474	3B	1.7264
Holder Cap	S13-12-FCRD02	0	3	Gr 5 Titanium	1		20093	20475	3F	0.1715
Bead	S13-12-FCRD02	0	4	Zirconium Oxide	5		20484	20484	5 total	0.0087
Specimen Container	S13-12-FCRD02	0	5	Molybdenum	1		20026	20476	6D	2.0053
Specimen	S13-12-FCRD02	0	6	Steel	1		20486	20486	H4	0.0032
									N/A	0.0000
Thermometry	S13-12-FCRD02	0	Note 10	SiC	1		19502	19502	3	0.0215
Buffer	S13-12-FCRD02	0	7	Zirconium Oxide	3		20274	20485	7	0.0342
									8	0.0340
									9	0.0340
									14	0.0337
									15	0.0339
Quartz Wool			N/A	Quartz	AR		20224	20224	1 total	0.0020

Assembly

	Drawing	Rev.	Comment
Assembly Drawing	S13-12-FCRD01	0	
Welding & Cleaning	X3E020977A646	0	
Fill Gas	Helium		