US ITER 1020100-TD0017-R00
2.6.P1A_B.US.01.0

ITER TCWS Conceptual Design Chit Resolution Report

February 2012

This report was prepared as an account of work sponsored by an agency of the United States Government. Neither the United States Government nor any agency thereof, nor any of their employees, makes any warranty, express or implied, or assumes any legal liability or responsibility for the accuracy, completeness, or usefulness of any information, apparatus, product, or process disclosed, or represents that its use would not infringe privately owned rights. Reference herein to any specific commercial product, process, or service by trade name, trademark, manufacturer, or otherwise, does not necessarily constitute or imply its endorsement, recommendation, or favoring by the United States Government or any agency thereof. The views and opinions of authors expressed herein do not necessarily state or reflect those of the United States Government or any agency thereof.

US ITER 1020100-TD0017-R00

ITER TCWS CONCEPTUAL DESIGN CHIT RESOLUTION REPORT

Jan Berry

Date Published: February 2012

Prepared by
OAK RIDGE NATIONAL LABORATORY
Oak Ridge, Tennessee 37831-6283
managed by
UT-BATTELLE, LLC
for the
U.S. DEPARTMENT OF ENERGY
under contract DE-AC05-00OR22725

ITER TCWS CONCEPTUAL DESIGN CHIT RESOLUTION REPORT

February 2012

Jan Berry WBS Team Leader, US ITER Cooling Water Systems	February 24, 2012 Date
John Bumgardner Nuclear Systems Division Director	2-27-12 Date
Brad Nelson Chief Engineer, US ITER	FEB 26, 2012 Date
Glen Cowart QA Responsible Officer	2/28/12 Date
Frank Casella Quality & ES&H Manager, US ITER	2/28/12 Date

CONTENTS

Page

LIST OF FIGURES v
LIST OF TABLES v
LIST OF ACRONYMS vii
1. INTRODUCTION 1
1.1 PURPOSE 1
2. CATEGORY 1 CHITS RESOLUTION 1
2.1 CHIT NO. 5 1
2.1.1 Resolution 1
3. CATEGORY 2 CHITS RESOLUTION 2
3.1 CHIT NO. 3 2
3.1.1 Resolution 2
3.2 CHIT NO. 7 3
3.2.1 Resolution 3
3.3 CHIT NO. 9 3
3.3.1 Resolution 3
3.4 CHIT NO. 17 5
3.4.1 Resolution 5
3.5 CHIT NO. 21 5
3.5.1 Resolution 5
3.6 CHIT NO. 22 6
3.6.1 Resolution 6
3.7 CHIT NO. 23 7
3.7.1 Resolution 7
3.8 CHIT NO. 24 8
3.8.1 Resolution 8
3.9 CHIT NO. 25 8
3.9.1 Resolution 8
3.10 CHIT NO. 27 9
3.10.1 Resolution 9
3.11 CHIT NO. 33 9
3.11.1 Resolution 9
3.12 CHIT NO. 37 10
3.12.1 Resolution 10
3.13 CHIT NO. 38 11
3.13.1 Resolution 11
3.14 CHIT NO. 40 11
3.14.1 Resolution 11
3.15 CHIT NO. 42 12
3.15.1 Resolution 12
3.16 CHIT NO. 52 12
3.16.1 Resolution 12
3.17 CHIT NO. 56 13
3.17.1 Resolution 13
3.18 CHIT NO. 60 13
3.18.1 Resolution 14
3.19 CHIT NO. 61 14

3.19.1 Resolution 14
3.20 CHIT NO. 62 15
3.20.1 Resolution 15
3.21 CHIT NO. 63 15
3.21.1 Resolution 15
3.22 CHIT NO. 65 15
3.22.1 Resolution 15
3.23 CHIT NO. 66 16
3.23.1 Resolution 16
4. SUMMARY 16
5. REFERENCES 16
5.1 REFERENCED DOCUMENTS 16
5.2 CODES AND STANDARDS 17
5.3 ITEMS TO BE VERIFIED 18

LIST OF FIGURES

Figures **Page**

1 IBED PHTS Double Isolation Valves..... 2
2 PRT and associated Nozzles/Connections (Reference [5.1.7], [TBV-002])..... 4

LIST OF TABLES

Tables **Page**

1 Mapping between TCWS Operating Mode versus ITER Plant Operation State 5

LIST OF ACRONYMS

ACCC	Active Correction and Compensation Coil
ACP	Activated Corrosion Product
AFS	AREVA Federal Services
ALARA	As Low As Reasonably Achievable
CC	Correction Coil
CCWS	Component Cooling Water System
CHF	Critical Heat Flux
CHWS	Chilled Water System
CIS	Central Interlock System
CODAC	Control, Data Access, and Communication
CS	Central Solenoid
CSS	Central Safety System
CVCS	Chemical and Volume Control System
CWS	Cooling Water System
DA	Domestic Agency
DBRD	Design Basis Requirements Document
DDD	Design Description Document
DIV	Divertor
DNB	Diagnostic Neutral Beam
DOE	Department of Energy
DRS	Draining and Refilling System
DT	Deuterium-Tritium
DYS	Drying System
EDB	Engineering Database
EDH	Electrical Design Handbook
ESP	Equipment Sous Pression
ESPN	Equipments Sous Pression Nucleaires
FPTS	Fusion Power Termination System
FW/BLK	First Wall/Blanket
HC	Hot Cell
HELB	High Energy Line Break
HMI	Human Machine Interface
HNB	Heating Neutral Beam
HRS	Heat Rejection System
HX	Heat Exchanger
IA	Inherent Availability
IBED	Integrated Blanket, ELM-VS coils and Divertor
ICD	Interface Control Document
IS	Interface Sheet
ITER	“The Way” (Latin)
ITER IO	ITER International Organization
LTM	Long Term Maintenance
NAIMA	North American Insulation Manufacturers Association
NB	Neutral Beam
NBI	Neutral Beam Injector
ORNL	Oak Ridge National Laboratory
ORP	Oxidation Reduction Potential
PBS	Plant Breakdown Structure

PCR	Project Change Request
PED	Pressure Equipment Directive
PF	Poloidal Field
PHTS	Primary Heat Transfer System
POM	Plasma Operation Mode
POS	Plasma Operation
PPEN	Pulsed Power Electrical Network
PR	Project Requirements Document
RAMI	Reliability, Availability, Maintainability, and Inspectability
RF	Radiofrequency
RTE	Responsible Technical Engineer
SC	Seismic Class
SIC	Safety Important Component
SRD	System Requirements Document
SS	Stainless Steel
SSCs	Systems, Structures and Components
SSE	Safety Shutdown Earthquake
SSEN	Steady State Electrical Network
STM	Short Term Maintenance
ST-VS	Suppression Tank Venting System
TBV	To be verified
TCS	Testing and Conditioning State
TCWS	Tokamak Cooling Water System
TF	Toroidal Field
VDH	Vacuum Handbook
VDS	Ventilation and Detritiation System
VS	Vertical Stabilization
VV	Vacuum Vessel
VVPSS	Vacuum Vessel Pressure Suppression System
WBS	Work Breakdown Structure

1. INTRODUCTION

1.1 PURPOSE

Design Chits resulted from the External Conceptual Design Review (CDR) held at Cadarache on July 21-23, 2009 (Reference [5.1.3]). Those Chits were categorized into 3 categories in accordance with the following rules:

- Category 1: Chits to be resolved before proceeding with preliminary design
- Category 2: Chits to be resolved during preliminary design
- Category 3: Chits already resolved or covered by higher category Chits such that no further action is required.

Prior to the preliminary design, all the category 1 chits were resolved and the category chit 1 resolution report was approved (Reference [5.1.4]). However, as the design has been evolving, one of the category 1 chits needs to be re-addressed. The purpose of this report is to present the resolutions to one CDR Category 1 Chit (Cat 1 Chit No.5) and twenty-three CDR Category 2 Chits. The Category 2 Chit resolutions presented are listed in order from item number one to item number twenty-three.

2. CATEGORY 1 CHITS RESOLUTION

2.1 CHIT NO. 5

Item #	Issue Statement
1	Design strategy for isolating the baking and cooling circuits during divertor baking needs to be defined. Are suitable isolating valves available?

2.1.1 Resolution

To ensure no cross leakage between high pressure water and hot gas during the DIV gas baking, double isolation valves are used in two locations within the IBED PHTS system as shown in the simplified sketch, Fig. 1, with valves positioned for DIV gas baking. Any leakage from the gas side or the water side is collected and sent to the Vent Collection System.

The isolation valves are separated by a minimum distance of approximately 1.0m to minimize temperature gradients and heat conduction from the high temperature side (350ºC nitrogen gas) to the low temperature side (240ºC water). For a DN500/Schedule 80 pipe insulated with 82mm thick mineral wool, a distance of 1.0m is sufficient for a smooth transition from 350ºC to 240ºC. It was estimated that the convective heat transfer in the pipe section between two valves is negligible (approximately 40W). For conservatism and simplicity, the estimate neglected the heat loss from the valve bonnet, stem and yoke, and assumed that the gas side isolation valve is immediately adjacent to the drying system tie-in point. If the valve is further away from the tie in point, it will be at a lower temperature than the 400ºC conservative upper bound of the gas temperature, and the resulting temperature gradient will be lower.

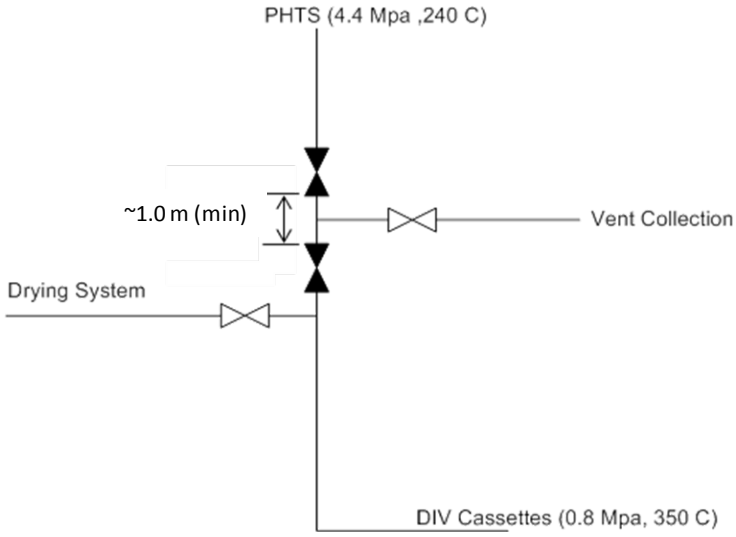

Fig. 1. IBED PHTS Double Isolation Valves.

3. CATEGORY 2 CHITS RESOLUTION

3.1 CHIT NO. 3

Item #	Issue Statement
1	Clarification is required of which European standards and French Regulations are applicable.

3.1.1 Resolution

EU standards and French regulations are listed in TCWS System Requirements Document (Reference [5.1.15], [TBV-001]) including a future update of "HSE legal requirements applicable to SRD 26" (ITER_D_4CUB39) which "aims to summarize the main Health and Safety Legislation."

Below are codes and standards applicable to the TCWS Preliminary Design:

- ITER Structural Design Code for Buildings, ITER_D_283B24 [26PHs271]
- Codes and Standards for ITER Mechanical Components, ITER_D_25EW4K [26PHs273]
- "French Decree 99-1046 dated December 13, 1999 – Concerning Pressure Equipment [ESP]" [26PHs1216]
- "French Order dated December 12, 2005 – Concerning Nuclear Pressure Equipment [ESPN]" [26PHs1216]
- Electrical Design Handbook (EDH), ITER_D_2DSPT6 [26PHs275]
- Plant Control Design Handbook, ITER_D_27LH2V [26PHs1017]

3.2 CHIT NO. 7

Item #	Issue Statement
2	Conceptual design of the Pressure Relief Vessel should accommodate overfilling including bursting disc and vent line. Adequate cooling via CVCS and appropriate vacuum relief for correct draining is required.

3.2.1 Resolution

The pressurizer relief tank (PRT) is equipped with a rupture disc (DK-7001) which discharges to the TCWS vault for overpressure protection (See Fig. 2, [TBV-002]) and a vent line (N2) which discharges to the Waste Collection System and drain pipe (N20) that discharges to drain tanks.

The PRT is designed to accommodate a vacuum. This operating condition occurs when air is removed from the PRT by drawing a vacuum via the N-VDS vacuum pump prior to refilling the PRT with nitrogen. The draining is a slow, controlled process, and the tank pressure can be modulated with Nitrogen Gas Distribution. Therefore, a vacuum breaker is not required for draining the PRT.

A cooling coil inside the tank provides cooling of the liquid inside the PRT. The cooling water is provided by the CCWS.

3.3 CHIT NO. 9

Item #	Issue Statement
3	Operating mode vs. machine operation state. The current matrix for the operation states of the TCWS as a function of the machine (plant) states appears to be incomplete and would need to be more detailed and agreed with Operations and CODAC Teams.

3.3.1 Resolution

During Preliminary Design, the operating guidelines were developed, which currently contains high-level step-by-step guidance for the operating mode transitions (Reference [5.1.2], [TBV-009]). During Final Design, these guidelines will be revised to include detailed operation of the TCWS. When these guidelines and the underlying concept of operation have been accepted, step-by-step procedures will be developed and actions tied to specific component designators.

Table 1 shows the mapping between TCWS operating mode versus ITER Plant Operation State (Reference [5.1.13], [TBV-003]).

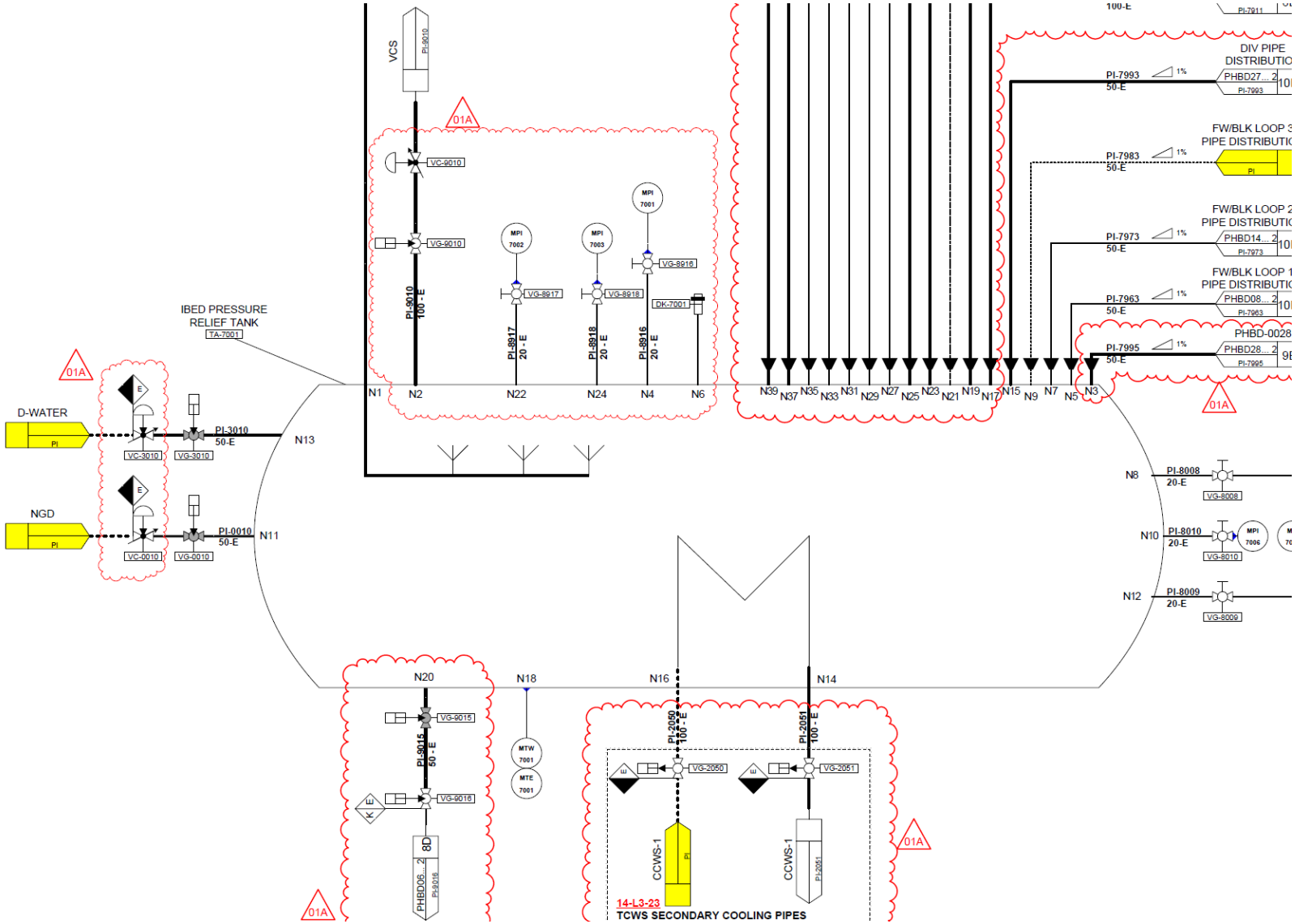

Fig. 2. PRT and associated Nozzles/Connections (Reference [5.1.7], [TBV-002]).

Table 1. Mapping between TCWS Operating Mode versus ITER Plant Operation State
(Reference [5.1.13], [TBV-003])

TCWS Operating Modes	ITER Common Operating States	ITER Operating States			
		LTM	STM	TCS	POS
POM	Running (Executing PS-10)			X	X
Standby	Ready (Ready PS-6)			X	X
Conditioning NBI	*Running (Executing PS-10)*		*X*	*X*	*X*
Idle	Not ready (Not ready PS-3)		X	X	
Off	Shutdown (Off PS-1)	X	X		
Maintenance	Shutdown (Off PS-1)	X	X		
Water Baking	Shutdown (Off PS-1)	X	X		
Gas Baking	Shutdown (Off PS-1)	X	X		

3.4 CHIT NO. 17

Item #	Issue Statement
4	The hazard analysis was based on US philosophy and practice. Check the acceptance from French regulator ASN.

3.4.1 Resolution

The ITER IO Safety Requirements were established based on a hazards analysis and have been review by the French regulator (ASN). The safety requirements that are applicable to the TCWS have been flowed down into SRD-26 (Reference [5.1.15], [TBV-001]), which are top level requirements for TCWS design.

Hazard Analyses which are specific to TCWS components/equipment are also to be performed according to ESPN requirements following the system Final Design when the build-to-print design of components/equipment is prepared by component/equipment fabricators. The equipment manufacturers will perform hazard analyses to meet the Essential Safety Requirement per ESP and ESPN, and these analyses will be reviewed and approved by ANB.

3.5 CHIT NO. 21

Item #	Issue Statement
5	Assess the transport of corrosion product in PHTSs - the chemical conditioning should be based on a detailed estimation of the Cu transport (especially in NBI).

3.5.1 Resolution

The use of copper alloys is considered in the design of CVCS and water chemistry approach, using literature and ITER-specific data on copper release rates. This has been presented in the System

Description Document (Reference [5.1.13], [TBV-003]) which includes chemical conditioning necessary to control water chemistry.

To estimate copper release rates from the entire TCWS, a computational tool is required so that some ITER-specific data can be used to complete estimates of copper release rates. However, no tools are available and moreover, individual client systems (FW/BLK, DIV and NBI) are responsible for providing the release rates of copper from their systems. In absence of those data supplied by ITER IO, US ITER has conducted a literature survey and consulted with commercial nuclear industry experts to make a reasonably conservative estimate of the corrosion product release rate. Specifically, release rates from NBI have been documented in the NBI CVCS System Sizing Calculation (Reference [5.1.9]). During the preliminary design, the design for NBI resulted in the cooling responsibility of ACCC of NBI, which is a major source of copper corrosion products, was appropriately transferred to the CCWS (IN-DA) because no radioactive constituents are generated in this device.

3.6 CHIT NO. 22

Item #	Issue Statement
6	Double containment is proposed for piping inside the cryostat (to reduce risk of leaks leading to the build-up of ice in cryostat). This option has to be reviewed and compared to other solutions from reliability and access point of views to permit leak detection, localization and repair, and movement of the vacuum vessel.

3.6.1 Resolution

Double containment of cooling water pipes inside the cryostat is a project requirement, PR requirement [PR919-R] (Reference [5.1.1]). Therefore, alternatives to the double containment of the TCWS pipes inside the cryostat were not formally studied. Also, an alternative option other than double containment (either double walled piping or piping inside guard pipe) to keep moisture and ice out of the cryostat in case of pipe leak or pipe break is not apparent.

The double containment solution has been reviewed through a literature survey and vendor contact for reliability, leak detection and localization, access and repair and is discussed in the freeze protection study performed in Preliminary Design, ITER TCWS in Cryostat Piping Freeze Analysis and Manufacturability Study (Reference [5.1.6]). The study also addresses the issues of manufacturability, maintainability and inspectability of the piping inside the cryostat.

Additionally, PCRs-243, 273 and 281 were implemented to modify the TCWS design with double-containment inside the cryostat and improve leak detection and localization of in-cryostat and in-vessel piping.

3.7 CHIT NO. 23

Item #	Issue Statement
7	ESPN classification and N17 control. Proposal of improvement (PCR-190) with no more HX on the roof eliminate any risk outside the Tokamak building. No risk in the vault (access time long compared to decay time). Limit may come from tube rupture in HX and leak from TCWS to the secondary loop outside the building. Solution could be a low leak rate for limit-of-detection, combined with activity monitoring. N3 category should be presented to safety Authority and decision could be delayed to mid-2010.

3.7.1 Resolution

The proposed design to move the heat exchanger (HX) from the roof to inside the building has become a baseline through PCR-190 so that any potential for direct release into the environment is removed.

All TCWS HXs are located inside the Tokamak Building.

Leak detection and monitoring of the heat exchanger will be designed according to the following requirements from the SRD 26-PH (Reference [5.1.15], [TBV-001]), as described below during Final Design.

- Means shall be provided to detect a leak of coolant from a PHTS loop into the CCWS loop to provide an alarm, so that the CCWS can be isolated to minimize releases. [26PHs1034].

- Specifically, a monitoring system shall be installed to detect large leak from PHTS into the secondary cooling loop of main heat exchangers. The detection could be based on on-line measurement of tritium and shall be made within two minutes. [26PHs1035]

- On-line detection methods are available to measure leak rates larger than 15 mg-tritium per day. For leakage between 15 and 1500 mg-tritium per day a grab sample will be taken immediately to confirm the on-line signal. If confirmed, the secondary cooling system will be isolated from the PHTS heat exchanger. In case of very large leaks (i.e., tube ruptures), the secondary cooling system will be isolated in five minutes. Leaks below 15 mg-tritium/day will be detected by taking regular test samples of the secondary coolant side. [26PHs1160]

In addition, based on ITER IO documentation that classifies nuclear pressure equipment, some equipment has been reclassified from N3 to N2 as appropriate based on N^{16}, N^{17} isotope quantity in the component. The IBED PHTS piping with pressurizer and heat exchangers have already been classified as N2 while NBI and VV PHTSs are classified as N3 because of low radioactivity (Reference [5.1.22]).

3.8 CHIT NO. 24

Item #	Issue Statement
8	Cryostat access. US ITER has to specify if they request access to inside cryostat during operation life and for which purpose (maintenance, in service inspections, repairs). If yes and agreed by IO, space allocation and related access path will have to be supplied by IO PBS-24.

3.8.1 Resolution

Cryostat access is required for repairs of IBED piping inside the Cryostat. Additionally, Cryostat access is potentially required for direct visual in-service inspection if alternative in-service inspection techniques are not accepted by the ANB or the ASN. The design of the in-cryostat piping is described in ITER TCWS in Cryostat Piping Freeze Analysis and Manufacturability Study (Reference [5.1.6] and will be presented during the preliminary design review.

Details of locations for access will be determined during Final Design.

3.9 CHIT NO. 25

Item #	Issue Statement
9	TCWS Drain Tanks have to be conceived to recover most of the radioactive content (dust and T) originating in-vessel. This involves radiological protection and equipment to clean the tanks (agitators, sprinklers, etc.). The division of responsibility with waste management needs to be clear. The requirement to have this tank available (empty) for resumption of DT operation needs clarification.

3.9.1 Resolution

The safety drain tanks have been designed to include a spray system to clean the interior of the Tanks. EIR-3004587-002, ITER TCWS Drain Tanks – Design Basis Document for Equipment Specification, requires a clean in place system to decontaminate the drain tanks (Reference [5.1.5]). Demineralized water is delivered to the safety drain tanks for the Spray System (Reference [5.1.8]) and (Reference [5.1.9]).

Operational provisions require that any liquid that is stored in the safety drain tanks be sent to the Waste Collection Tank that is designed to meet the PBS 66 interface requirements. Operational provisions also required the safety drain tanks to be empty prior to DT operation with the use of level switches (Reference [5.1.8]). Detail I&C design of the level switch will be completed during Final Design. The ITER TCWS Draining and Refilling System P&IDs show the interface and division of responsibility for waste management (Reference [5.1.8], [TBV-006], [TBV-007]).

Top Level Project Technical Document Project Requirements (IDM_27ZRW8) includes requirements that clarifies that Safety Drain tank will be available (empty) for resumption of DT operation as follows:

It shall be possible to process the contaminated water discharged to draining tank(s) following an in-vessel water leak. [PR1067-R]

It shall be possible to process the water and to clean the safety drain tank(s) to allow the restart of the plant within one year. [PR1068-R]

3.10 CHIT NO. 27

Item #	Issue Statement
10	Adopt if possible resins and mechanical filters for CVCS which have already recognized for waste treatment and storage in France (ANDRA).

3.10.1 Resolution

The resins and mechanical filters for CVCS, which have already been recognized for waste treatment and storage in France, have been included in the design.

The mechanical filters are cartridge type filters made of pleated carbon fiber (low temperature) or sintered metal (high temperature). These are common and proven filter element materials in the Commercial Nuclear Industry in France.

The demineralizers have mixed bead-type resins. Bead-type resins are commonly used in Pressurized Water Reactor CVCS systems and already recognized in France.

3.11 CHIT NO. 33

Item #	Issue Statement
11	Machine (investment) protection. Fault analysis is required to identify events leading to a threat to the vessel integrity and procedures for ensuring safe response to such events including the possibility of drain down of systems.

3.11.1 Resolution

ITER IO is currently developing investment protection criteria and systems/functions to be protected for that purpose (Reference [5.1.17], [TBV-004]). Class-III power supply for investment protection purposes to prevent freezing have been identified in the electric load list (Reference [5.1.11], [TBV-008]). Structural integrity of the ITER Building and equipment has been considered in the TCWS design to meet the design requirement of the high energy line break (HELB).

Currently, a document (ITER TCWS Equipment Protection Interlock Requirements, EIR-3006328) is being developed that determines the equipment to be protected through the Plant Interlock System and the level of protection for that equipment based on the following ITER documents:

- ITER Document 27LH2V, “Plant Control Design Handbook”, v6.1 (Sys ID 0080) (Reference [5.1.18])
- ITER Document 3QJ4Z3, “Conceptual System Design Description Central Interlock System – DDD PBS 46” (Sys ID 0203) (Reference [5.1.19])
- ITER Document 3PZ2D2, “Guidelines for the Design of the Plant Interlock System (PIS)” (Sys ID 0204) (Reference [5.1.20])

The following activities are planned to be completed during Final Design:

(1) Investment protection criteria.

(2) Identification of equipment/systems to be protected for investment purpose.

(3) Analysis to identify events/design that might lead to challenge integrity of the systems/equipment to be protected.

(4) Calculation of loading to the systems/equipment to be protected.

During the piping design process, structures, systems and components will be reviewed for interaction with pipe whip, jet sprays and potential impact from any piping, cable trays or ductwork due to HELB. During the HELB review, if interactions are identified, pipe rupture restraints and jet shields will be located in a manner that protects essential equipment from these interactions.

Investment protection during draining operations is provided by including double isolation valves in drain lines to prevent inadvertent drainage of the PHTS during operations.

3.12 CHIT NO. 37

Item #	Issue Statement
12	Fatigue of pipes due to vibration should be considered before decisions on pipe restraints are made.

3.12.1 Resolution

Vibration may be originated from pulsating equipment such as pumps and/or cavitation in any portion of piping that may experience sudden pressure drop. Predicting the susceptibility of a piping system to vibration is complicated by the fact that there are construction tolerances for pipe placement, valve and orifice locations and support locations. In addition, there are tolerances in support erection. During commissioning, field tests will be conducted of each system to fine tune the system and prevent resonance of the piping system with pump vibration or unacceptable flow conditions from occurring.

ASME B31.3 (Reference [5.2.4]), Section 321 discusses pipe supports. Under 321.1.1 “Objectives”, it states that “The layout and design of piping and its supporting elements shall be directed toward preventing the following:

(e) resonance with imposed or fluid-induced vibrations”

ASME B31.3 does not provide instructions or guidelines on how resonance can be prevented. During Final Design, ASME B31.1 (Reference [5.2.5]) will be used for pipe support spacing based on deadweight as the initial support layout system, and verified through piping stress analysis.

3.13 CHIT NO. 38

Item #	Issue Statement
13	The 'light check' of models and drawings is insufficient for releasing these to the US DA. Models and drawings should both be "fully checked" before issue to the DA or as build-to-print.

3.13.1 Resolution

AFS utilizes a CAD review process to fully check the model and drawings that follows AFS's review process as well as the ITER IO Design Review Procedure. The review process incorporates the applicable portions of the ITER IO Design Review Checklists. Upon the AFS review, actions for resolution are documented and dispositioned for tracking to resolution. AFS checking provided for preliminary design was performed and documented in TDR-3006361, AFS/US ITER End of Preliminary Design TCWS Design Review (Reference [5.1.14]).

3.14 CHIT NO. 40

Item #	Issue Statement
14	The IGE-XAO See Visio Oracle data base needs to be linked to the ENOVIA data base such as to have single database of models and drawings. The ENOVIA Replication presently does not allow the US DA to send models back to the IO - an effective system needs to be put in place.

3.14.1 Resolution

This Chit addresses two separate issues: 1) integration of See System Design (SSD)/ORACLE and CATIA/ENOVIA databases, and 2) replication of CATIA/ENOVIA (US PROD to ITER IO PROD).

Regarding the first issue, this is part of the scope of the Engineering Database (EDB), which is ITER IO responsibility. US ITER is monitoring the progress being made by the ITER IO Configuration Management Working Group (CMWG). In the meantime, US ITER has implemented the 2D/3D checker to compare the two data files (SSD and CATIA Model). This integrates the databases and provides for a comparison and checking process.

The second issue has been resolved. It was a problem because there were too many replication packages to manage during the time available each night, but now the ITER IO is replicating only the following:

1) DM data that a DA/Supplier produces
2) Configuration models that the DA needs for context
3) Catalogs, and
4) Special requests (like other DA_DRAFT data interests US DA).

This resolved issues regarding the required replications and replication frequency.

3.15 CHIT NO. 42

Item #	Issue Statement
15	An effective design approval, issue and modification control system needs to be in place, including a safety basis review process to ensure that all changes to the RPrS are incorporated into the TCWS design, and that TCWS design changes are bounded by the ITER Safety Basis (RPrS).

3.15.1 Resolution

SRD 26-PH (Reference [5.1.15], [TBV-001]) has been updated to incorporate all RPrS requirements for TCWS. Changes to the RPrS were reviewed and the SRD was updated as appropriate. The TCWS Requirements Compliance Matrix (Reference [5.1.16]) has been updated and tracks SRD requirements to the implementing design documents. The RCM has also been revised to satisfy ITER IO format requirements.

The AFS design control process as implemented in engineering QA implementing procedures requires that changes to input documents be evaluated for impact to the design. Following any change to SRD 26-PH (Reference [5.1.15], [TBV-001]), TCWS RCM (Reference [5.1.16]), and design documents will be revised, as appropriate.

Thus, an effective design approval, issue and modification system is in place that ensures the TCWS design is compliant with safety requirements in SRD 26-PH (Reference [5.1.15], [TBV-001]).

In addition, ITER IO is nearing completion of procedures for review of design changes to ensure that changes are bounded by the ITER Safety Basis (RPrS). This procedure will be implemented when it is approved.

3.16 CHIT NO. 52

Item #	Issue Statement
16	A guidance note is required for the DAs on the role and responsibilities of the ANB.

3.16.1 Resolution

ITER IO provided guidance regarding implementation of the ESPN by preparing and issuing the following documents:

Final Report Introduction - Compliance ASME and ESP/ESPN (IDM_3DCH46)
Compliance ASME Sec VIII Div 2 and ESP/ESPN (IDM_3E5HKQ)
Compliance ASME B31.3 bellows and ESP/ESPN (IDM_35JYWW)
Compliance ASME B16.34 and ESP/ESPN (IDM_33YHTZ)
Compliance ASME B73.1 and ESP/ESPN (IDM_342RUP)
Compliance ASME B73.2 and ESP/ESPN (IDM_344H8P)

US ITER also hired two Agreed Notified Bodies (ANBs) Bureau Veritas and Vincotte. Bureau Veritas reviewed the subject documents and reached the following conclusion:

"The general method used to do the IO doc on compliance between ASME standards and PED/ESPN orders have been checked and find relevant. The IO doc follow the frame of ASME guide (ref [1]) or ISO norm (ref [2]) which give guidance for compliance with PED. They are completed by additional guidance for compliance with ESPN Order. These documents could be used as general frame for preparing documentation and manufacturing of the equipment of US ITER.

Nevertheless, BV estimates that only a detailed examination of the dedicated documentation of the equipment (i.e., equipment specification, welding book, NDT procedure, …) could assure to US ITER to be fully compliant with the French regulation."

The role and responsibility of the ANB is to verify the manufacturer's conformity assessment and certify that the finished products meet the Essential Safety Requirements of ESPN (Reference [5.2.3]) or ESPN (Reference [5.2.2]) as applicable. This includes proper application of and compliance with: the European Pressure Equipment Directive (PED) 97/23/EC, the French Decree of 13 December 1999 for Pressure Equipment (ESP), the French Order of 21 December 1999 for ESP classification, the French Order of 12 December 2005 for Nuclear Pressure Equipment (ESPN), and AQ84 Arrêté de la Qualité dated 10 August 1984.

3.17 CHIT NO. 56

Item #	Issue Statement
17	The drying process may induce high thermal stress in the client systems and needs to be validated by the clients.

3.17.1 Resolution

An alternative to the "Flash Boiling" drying method presented at Conceptual Design Review, the proposed drying methodology aims at minimizing the thermal stress problem. The Drying System transports a hot drying gas through the in-vessel components at a pressure below the saturation pressure corresponding with the gas temperature. The whole system is slowly heated by the gas to a temperature above the saturation temperature of the remaining water. This heat-up is maintained long enough so as to evaporate all the water from the in-vessel components. The heat-up rate is limited by the allowable heat-up rate of the cassettes.

By comparison with the "Flash Boiling" method, the aforementioned method minimizes the thermal stress concern.

3.18 CHIT NO. 60

Item #	Issue Statement
18	Need to clarify the route for processing and disposal of copper contaminated, tritiated water.

3.18.1 Resolution

During the preliminary design the interface with Radioactive Waste (PBS 66) was clarified: TCWS provides a waste collection tank; Rad Waste provides the pump and piping connection to transfer the waste (see Interface Sheet IDM_3QGYUH).

The current routing of copper contaminated, tritiated TCWS water to the Radwaste System is through the Waste Processing Tank as shown on P&ID ITER-M-PD-DR00-0014. (Reference [5.1.8], [TBV-007]).

The ITER document prepared by the PBS-66 (ITER Type A Radwaste Management Plan, ITER D 4LGZZY, Reference [5.1.23]) provides limits on ACP and the tritium activity to be discharged to the radwaste system. TCWS operations include provision to ensure that the limits on ACP and the tritium activity will not be exceeded.

Regarding copper-related activity, the above document does not list any associated concerns. However, since copper isotope Cu-64 is short-lived, an operational procedure will be developed for TCWS operations to ensure the Cu-64 will substantially decay before any discharge to the radwaste system is transferred. The copper radioisotopes can be left inside tritiated waste storage for decay since they are relatively short-lived (days or weeks).

3.19 CHIT NO. 61

Item #	Issue Statement
19	The acceptability of operating the FW/BLK and VV PHTSs at the same pressure (6 bar) is to be assessed to enable potential design changes for RAMI.

3.19.1 Resolution

Operating the First Wall Blanket (FW/BLK) and Vacuum Vessel Primary Heat Transfer System (VV PHTS) at the same pressure is not acceptable according to requirements described in SRD 26-PH as described here. The operating pressure of the VV PHTS is set at 0.8 MPa at the VV inlet as required by the VV stress analysis (Reference [5.1.15], [TBV-001], Table 2.2.4). This pressure is too low for the FW/BLK (Reference [5.1.15], [TBV-001], Table 2.2.2) (and also for the Divertor DIV (Reference [5.1.15], [TBV-001], Table 2.2.3). The higher pressure is required to obtain sufficient Critical Heat Flux (CHF) in the FW components to avoid a burn-out of the FW (same for Targets of DIV cassettes). Additionally, the water from the FW/BLK and the VV PHTS has different chemistry requirements and cannot be mixed.

To resolve the underlying concern on RAMI performance, the FW/BLK and DIV PHTS have been merged together into a single PHTS, the IBED (Integrated Blanket, ELM-VS coils and Divertor) PHTS. This modification is documented in PCR-273. The IBED PHTS has 5 parallel cooling trains of 25% capacity each. During Plasma Operating State (POS), 4 cooling trains are in operation and 1 cooling train is in standby. The cooling trains are feeding common headers, from where 5 loops are feeding the in-vessel components, 3 loops for the FW/BLK, 1 loop for equatorial ports, and 1 loop for the DIV. Besides offering several other advantages, the IBED PHTS considerably improves the RAMI performance of the in-vessel component cooling system.

3.20 CHIT NO. 62

Item #	Issue Statement
20	Does the in-cryostat pipework require thermal insulation/ low emissivity surface finish?

3.20.1 Resolution

The freeze protection study (Reference [5.1.6]) was performed. Current design solution for the in-cryostat piping is to use double containment piping, either double walled piping or pipe bundles inside a guard pipe. Vacuum will be maintained in the interspace to limit heat transfer. The freeze protection study shows that freezing can be prevented using trickle flow of cooling water with or without vacuum. Accordingly, thermal insulation or low emissivity surface finish are not required.

3.21 CHIT NO. 63

Item #	Issue Statement
21	IO responsible person for the installation of the pipework in the pipe chases is to be identified and have responsibility for accepting the modularity and constructability of the preliminary and detailed designs of the pipework and supports.

3.21.1 Resolution

The Plant Systems Installation Engineer of Machine Assembly and Installation Section has been identified as the ITER IO contact.

3.22 CHIT NO. 65

Item #	Issue Statement
22	Management of communications between third parties, for example A/E to buildings, is not defined and needs to be clarified

3.22.1 Resolution

As the need arises, the US DA and ITER IO have served and will continue to serve to arrange and mediate direct interaction and communication between responsible third parties. As an example of this process, several meetings were conducted between ITER IO, ENGAGE (EU DA's contractor for the building), US DA, and AFS (US DA's contractor for TCWS).

3.23 CHIT NO. 66

Item #	Issue Statement
23	A means should be sought for the US DA and the ANB to participate in the installation and commissioning of the system. This may require the IO to engage the ANB. The US DA responsibility should in any case include the supply of procedures for installation, commissioning, testing and maintenance of the system.

3.23.1 Resolution

This is associated with installation and commissioning and is not a design related issue. The US DA has initiated installation and maintenance plans and will complete development of procedures to coordinate deliveries with installation and maintenance of the system during Final Design in accordance with responsibilities established in Procurement Arrangement 2.6.P1A_B.US.01.0

4. SUMMARY

The resolutions to the CDR Category 1 and 2 Chits are addressed in the preceding sections and are supported by references.

5. REFERENCES

5.1 REFERENCED DOCUMENTS

5.1.1. Project Requirements, ITER_D_27ZRW8 v4.6

5.1.2. ITER TCWS Operating Guidelines 2011_11_08, EIR-3005026-000 [TBV-009]

5.1.3. Report on the External Conceptual Design of the TCWS held at Cadarache on 21–23 July 2009, ITER_D_2V29W2 v1.0

5.1.4. Report to close Chits Category 1 Raised at the TCWS Conceptual Design Review Meeting, ITER_D_2X6X89 v2.0

5.1.5. ITER TCWS Drain Tanks – Design Basis Document for Equipment Specification, EIR-3004587-003

5.1.6. ITER TCWS – In-Cryostat Piping Freeze Analysis and Manufacturability Study, EIR-3006138-000

5.1.7. Tokamak Cooling Water System P&ID, Integrated Blanket/ELMS/Divertor (IBED) PHTS, ITER-M-PD-PHBD-0002-01A (Draft) [TBV-002]

5.1.8. Tokamak Cooling Water System P&ID, Draining and Refilling System, ITER-M-PD-DR00: -0001-002, -0006-000, 0009-000, -0011-000, -0012-00B [TBV-006], -0014-00B [TBV-007]

5.1.9. Tokamak Cooling Water System Process Flow Diagram Draining and Refilling System, ITER-M-PF-DR00-0001-000

5.1.10. ITER TCWS NBI CVCS System Sizing Calculation, CALC-3005731-000

5.1.11. ITER TCWS ELL Calculation, EIR-3006654-Draft [TBV-008]

5.1.12. Interfaces Control Document (ICD) Between Tokamak Cooling Water System (PBS 26-PH, -CV, -DR, -DY)-Radwaste Treatment and Storage (PBS 66), ITER_D_2UVNYJ v1.1

5.1.13. ITER TCWS System Description Document (SDD) DRAFT, EIR-3005820-00D [TBV-003]

5.1.14. AFS/US ITER End of Preliminary Design TCWS Design Review, TDR-3006361-000

5.1.15. System Requirements Document (SRD) Tokamak Cooling Water System (TCWS), PBS-26, ITER_D_2823A2 v3.1 [TBV-001]

5.1.16. TCWS Requirements Compliance Matrix (RCM), EIR-3005752-000

5.1.17. MQP Policy for ITER Investment Protection, IDM 3VUMVW [TBV-004]

5.1.18. Plant Control Design Handbook, 27LH2V v6.1

5.1.19. Conceptual System Design Description Central Interlock System – DDD PBS 46, 3QJ4Z3

5.1.20. Guidelines for the Design of the Plant Interlock System (PIS), 3PZ2D2

5.1.21. ITER TCWS Heat Loss Calculation, CALC-3006728-DRAFT [TBV-005]

5.1.22. List of the ITER Nuclear Pressure Equipment, 34MZKE v1.1

5.1.23. ITER Type A Radwaste Management Plan, ITER_D_4LGZZY

5.2 CODES AND STANDARDS

5.2.1. Pressure Equipment Directive [PED]

5.2.2. French Order dated December 12, 2005, Equipments Sous Pression Nucleaires [ESPN]

5.2.3. French Decree 99-1046 dated December 13, 1999 – Concerning Pressure Equipment [ESP]

5.2.4. ASME Code for Process Piping, B31.3, 2008 Edition

5.2.5. ASME Code for Power Piping, B31.1, 2010 Edition

5.3 ITEMS TO BE VERIFIED

The following list identifies the items to be verified in this document.

Item	Status	Source Document				TBV Description	Action needed for Closure
		Doc ID No.	Title	Rev. #	Status		
TBV-001	Open	ITER_D_2823A2 v4.0	Systems Requirement Document	v3.1	N/A	SRD v4.0	ITER IO to approve SRD v4.0
TBV-002	Open	ITER-M-PD-PHBD-0002	Tokamak Cooling Water System P&ID Integrated Blanket/ELM/ Divertor (IBED) PHTS	01A	Draft	IBED PHTS P&ID	Issue ITER-M-PD-PHBD-0002-001 (Planned closure date February 24, 2012)
TBV-003	Open	EIR-3005820	ITER TCWS System Description Document (SDD)	00D	Draft	SDD	Issue EIR-3005820-000 (Planned closure date February 28, 2012)
TBV-004	Open	IDM 3VUMVW	MQP Policy for ITER Investment Protection	N/A	N/A	ITER Investment Protection Policy	ITER IO to approve IDM 3VUMVW
TBV-005	Open	CALC-3006728	ITER TCWS Heat Loss Calculation	00A	Draft	Heat Loss Calculation	Issue CALC-3006728-000 (Planned closure date February 28, 2012)
TBV-006	Open	ITER-M-PD-DR00-0012	Tokamak Cooling Water System P&ID, Draining and Refilling System	00A	Draft	DRS P&ID	Issue ITER-M-PD-DR00-0012-000 (Planned closure date February 28, 2012)
TBV-007	Open	ITER-M-PD-DR00-0014	Tokamak Cooling Water System P&ID, Draining and Refilling System	00A	Draft	DRS P&ID	Issue ITER-M-PD-DR00-0014-000 (Planned closure date February 28, 2012)
TBV-008	Open	EIR-3006654	ITER Tokamak Cooling Water System (TCWS) Electrical Load List (ELL) Calculation	Draft	Draft	ELL	Issue EIR-3006654-000 (Planned closure date February 28, 2012)
TBV-009	Open	EIR-3005026	ITER TCWS Operating Guidelines 2011_11_08	000	Not Signed	Operating Guidelines	Issue EIR-3005026-000 (Planned closure date February 28, 2012)