ORNL/TM-2016/225
CRADA/NFE-14-05022

The New S-RAM Air Variable Compressor/Expander for Heat Pump and Waste Heat to Power Application

Ryan Dehoff

May 23, 2016

CRADA FINAL REPORT
NFE-14-05022

Approved for Public Release.
Distribution is Unlimited.

OAK RIDGE NATIONAL LABORATORY
MANAGED BY UT-BATTELLE FOR THE US DEPARTMENT OF ENERGY

DOCUMENT AVAILABILITY

Reports produced after January 1, 1996, are generally available free via US Department of Energy (DOE) SciTech Connect.

Website http://www.osti.gov/scitech/

Reports produced before January 1, 1996, may be purchased by members of the public from the following source:

National Technical Information Service
5285 Port Royal Road
Springfield, VA 22161
Telephone 703-605-6000 (1-800-553-6847)
TDD 703-487-4639
Fax 703-605-6900
E-mail info@ntis.gov
Website http://www.ntis.gov/help/ordermethods.aspx

Reports are available to DOE employees, DOE contractors, Energy Technology Data Exchange representatives, and International Nuclear Information System representatives from the following source:

Office of Scientific and Technical Information
PO Box 62
Oak Ridge, TN 37831
Telephone 865-576-8401
Fax 865-576-5728
E-mail reports@osti.gov
Website http://www.osti.gov/contact.html

This report was prepared as an account of work sponsored by an agency of the United States Government. Neither the United States Government nor any agency thereof, nor any of their employees, makes any warranty, express or implied, or assumes any legal liability or responsibility for the accuracy, completeness, or usefulness of any information, apparatus, product, or process disclosed, or represents that its use would not infringe privately owned rights. Reference herein to any specific commercial product, process, or service by trade name, trademark, manufacturer, or otherwise, does not necessarily constitute or imply its endorsement, recommendation, or favoring by the United States Government or any agency thereof. The views and opinions of authors expressed herein do not necessarily state or reflect those of the United States Government or any agency thereof.

ORNL/TM-2016/225
CRADA/NFE-14-05022

Materials Science and Technology Division
Advanced Manufacturing Office

The New S-RAM Air Variable Compressor/Expander for Heat Pump and Waste Heat to Power Applications

Ryan Dehoff
Lee Jestings
Ricardo Conde

Date Published:
May 23, 2016

Prepared by
OAK RIDGE NATIONAL LABORATORY
Oak Ridge, Tennessee 37831-6283
managed by
UT-BATTELLE, LLC
for the
US DEPARTMENT OF ENERGY
under contract DE-AC05-00OR22725

Approved for Public Release

CONTENTS

Page
CONTENTS iv
LIST OF FIGURES v
ACKNOWLEDGEMENTS vi
ABSTRACT 1
1. THE NEW S-RAM AIR VARIABLE COMPRESSOR/EXPANDER FOR HEAT PUMP AND WASTE HEAT TO POWER APPLICATIONS 1
1.1 BACKGROUND 1
1.2. TECHNICAL RESULTS 2
1.2.1 Preliminary Component Builds Using EBM 2
1.2.2 Powder Removal 3
1.2.3 Modified Heat Exchanger Design 4
1.3 IMPACTS 5
1.4 CONCLUSION 5
2. PARTNER BACKGROUND 5

LIST OF FIGURES

Fig. 1. Preliminary design of the heat exchanger designed by S-RAM Dynamics fabricated via additive manufacturing for the S-RAM Heat Pump. 3
Fig. 2. Completed build showing the successful printing of a set of heat exchanger designs. The total build time was 151 hours for both components. Image on the right shows the internal structure of the failed heat exchanger build relative to the completed build for reference. 3
Fig. 3. Ultrasonic spot welding system and welding tools used to remove the sintered powder from the internal fluid channels of the heat exchanger. 4
Fig. 4. Additional heat exchanger designed by S-RAM Dynamics. Attempts at fabricating this heat exchanger were conducted at ORNL. 4

ACKNOWLEDGEMENTS

This CRADA NFE-14-05102 was conducted as a Technical Collaboration project within the Oak Ridge National Laboratory (ORNL) Manufacturing Demonstration Facility (MDF) sponsored by the US Department of Energy Advanced Manufacturing Office (CPS Agreement Number 24761). Opportunities for MDF technical collaborations are listed in the announcement "Manufacturing Demonstration Facility Technology Collaborations for US Manufacturers in Advanced Manufacturing and Materials Technologies" posted at http://web.ornl.gov/sci/manufacturing/docs/FBO-ORNL-MDF-2013-2.pdf. The goal of technical collaborations is to engage industry partners to participate in short-term, collaborative projects within the Manufacturing Demonstration Facility (MDF) to assess applicability and of new energy efficient manufacturing technologies. Research sponsored by the U.S. Department of Energy, Office of Energy Efficiency and Renewable Energy, Advanced Manufacturing Office, under contract DE-AC05-00OR22725 with UT-Battelle, LLC.

ABSTRACT

S-RAM Dynamics (S-RAM) has designed an innovative heat pump system targeted for commercial and industrial applications. This new heat pump system is more efficient than anything currently on the market and utilizes air as the refrigerant instead of hydrofluorocarbon (HFC) refrigerants, leading to lower operating costs, minimal environmental costs or concerns, and lower maintenance costs. The heat pumps will be manufactured in the United States. This project was aimed at determining the feasibility of utilizing additive manufacturing to make the heat exchanger device for the new heat pump system. ORNL and S-RAM Dynamics collaborated on determining the prototype performance and subsequently printing of the prototype using additive manufacturing. Complex heat exchanger designs were fabricated using the Arcam electron beam melting (EBM) powder bed technology using Ti-6Al-4V material. An ultrasonic welding system was utilized in order to remove the powder from the small openings of the heat exchanger. The majority of powder in the small chambers was removed, however, the amount of powder remaining in the heat exchanger was a function of geometry. Therefore, only certain geometries of heat exchangers could be fabricated. SRAM Dynamics evaluated a preliminary heat exchanger design. Although the results of the additive manufacturing of the heat exchanger were not optimum, a less complex geometry was demonstrated. A sleeve valve was used as a demonstration piece, as engine designs from S-RAM Dynamics require the engine to have a very high density. Preliminary designs of this geometry were successfully fabricated using the EBM technology.

1. THE NEW S-RAM AIR VARIABLE COMPRESSOR/EXPANDER FOR HEAT PUMP AND WASTE HEAT TO POWER APPLICATIONS

This phase 1 technical collaboration project (MDF-TC-2014-036) was begun on January 24, 2014 and was completed on April 30, 2016. The collaboration partner S-RAM Dynamics is a small business. The project demonstrated additive manufacturing of titanium alloy heat exchanger components by electron beam melting for use in an innovative heat pump system.

1.1 BACKGROUND

Conventional hydrofluorocarbon (HFC) heat pumps have two major problems when it comes to real world applications; 1) A dramatic loss of efficiency at temperature extremes, limiting their use in regions that experience very low or very high temperature conditions. Backup systems often have to be in place and used during periods of high or low temperatures and 2) the systems use a hydrofluorocarbon (HFC) refrigerant that carries serious environmental concerns and is heavily regulated. Use of HFC increases costs and complexity. If these limitations were resolved, the heat pump could become a much more viable option for all heating and cooling applications. The market needs a heat pump that is more efficient, less costly, operates in temperature extremes, and does not use HFC refrigerants.

The core of the S-RAM heat pump is the new S-RAM variable compressor/expander (VCE). The S-RAM VCE has several significant advantages over existing HFC and CO_2 compressors. First, the VCE can recover expansion work to offset required compressor power. Secondly, the VCE can continually adjust its expansion ratio to match temperature requirements. Third, it can continually adjust the stroke/displacement of the compressor independent of speed, which is not possible with other drives. The electric motor can run at its optimal constant speed, eliminating the costs and losses of variable motor speed operation. This allows the VCE to follow the user load profile and temperature changes very efficiently. Finally, the VCE is oil free, enabling improved heat exchanger efficiency and longer life.

The above advantages enable the S-RAM heat pump system to improve seasonal heating and cooling performance by as much as 30-50%. This results in heat pump systems that are more cost effective and practical than current HFC systems, enabling large-scale U.S. and world-wide adoption.

1.2. TECHNICAL RESULTS

S-RAM Dynamics determined the initial design for the heat exchanger based on the requirements outlined for the heat pump system. The design of the heat exchanger is shown in Figure 1. This is a challenging design for both electron beam melting (EBM) and laser based additive manufacturing technologies. It was decided to use the EBM powder bed technology because the size of the heat exchanger was larger than the build volume of the laser based powder bed systems available to the industrial base at the time of fabrication. During the project, several new laser powder bed systems have been released that are capable of fabricating larger geometry structures and would have a high probability of successfully fabricating this part. However, because of the volume of melted material in this geometry, it is expected challenges will still exist because of the resulting residual stress that may develop in the laser powder bed process.

1.2.1 Preliminary Component Builds Using EBM

EBM technology was chosen for the fabrication of this component because the total build height can be up to 350mm (approximately 13.7 inches). In addition, the residual stress in the printed component is lower using the electron beam melter, because the build is conducted at an elevated temperature. For Ti-6Al-4V, the build temperature set point is 720 C, however, the temperature decreased significantly as a function of build height. One challenge associated with the EBM process for the specific application of heat exchangers is that all of the powder used in the process is sintered during the preheating step. In order to reuse the loose powder that is not part of the final build, as is done in many additive manufacturing processes, a powder recovery system is used. The recovery system mechanically breaks down the sintered powder using attrition based processes, with the media being unsintered powder of the same chemistry. This allows the powder to be recycled without contamination. In order for the mechanical break down of the powders to occur, the grit blast media needs line of sight access to the sintered material. This is not typically possible with heat exchanger designs such as the one provided in Figure 1. Even if line of sight access is possible, the attiring media will only penetrate so far into a structure. Therefore, alternative methods for extraction of loose powder from the final build were required. Additional results are presented later in this report in the section on powder removal.

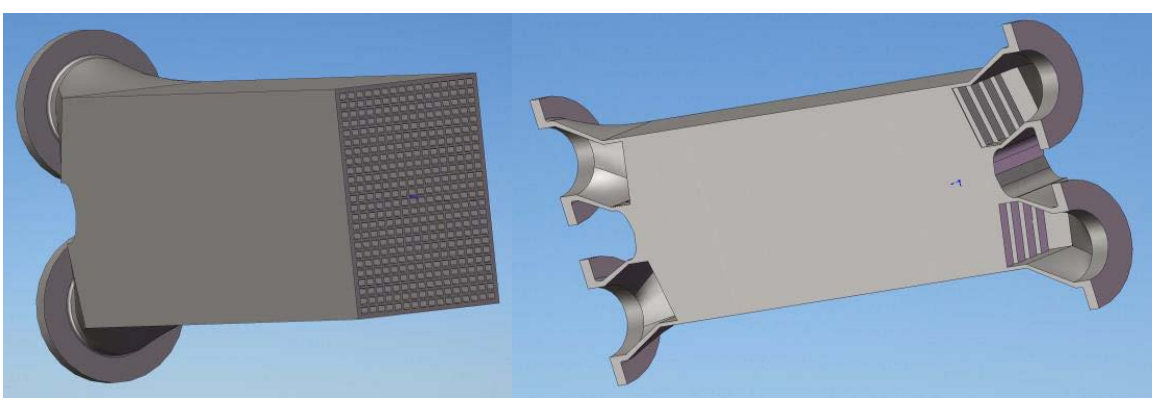

Fig. 1. Preliminary design of the heat exchanger designed by S-RAM Dynamics fabricated via additive manufacturing for the S-RAM Heat Pump.

A set of two heat exchangers was fabricated in a single Arcam EBM A2 build envelope. Printing of the two heat exchangers required several attempts in order to accomplish a successful build. The final build time of the set was 151 hours. This was the longest build time completed to date with the EBM technology. The average filament life on the A2 system is 80 hours, with a maximum predicated lifetime of the filaments being on the order of 120 hours. This build was 31 hours over the maximum predicted filament lifetime. This is a successful data point in the EBM technology. Pictures of the completed and failed builds are shown in Figure 2.

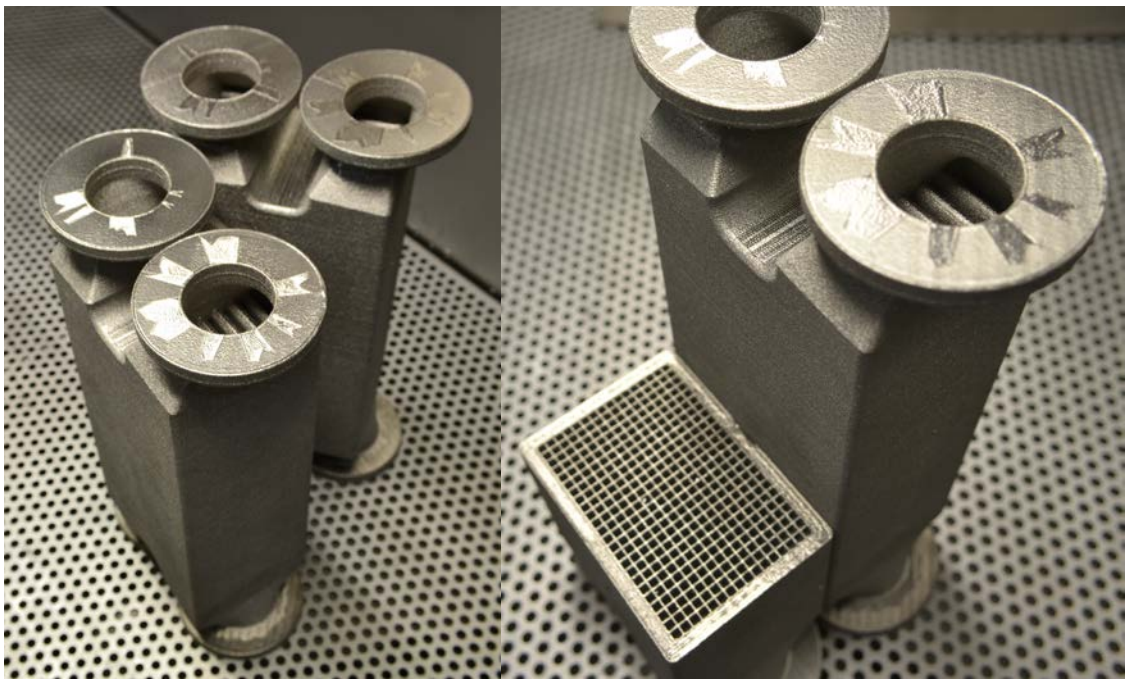

Fig. 2. Completed build showing the successful printing of a set of heat exchanger designs. The total build time was 151 hours for both components. Image on the right shows the internal structure of the failed heat exchanger build relative to the completed build for reference.

1.2.2 Powder Removal

One significant challenge posed by the heat exchanger design described above is the removal of partially sintered powder located within the flow channels of the heat exchanger. In order to remove this powder, a Sonitek ultrasonic spot welding system was utilized to vibrate the heat exchanger, loosening the sintered powder, and allowing it to be removed. This process took several iterations in order to guarantee all of the powder was successfully removed from the internal channels. The Sonitek system and welding tools used in the process are shown in Figure 3. A rubber insulation pad was placed between the heat exchanger and the ultrasonic heads shown in Figure 3 to ensure 1) the heat exchanger was not damaged during this process and 2) The welding head did not bond directly to the heat exchanger. Although successful at removing powder, the sintered material did not fully break down into raw powder after the ultrasonic treatment. Instead, the loose material remained sintered although the ultrasonic process delaminated the sintered material from the melted component. Because of this, the sintered powder removed from the internal channels of the heat exchanger could not be recycled. This result leads to

significantly excess powder usage during the process, and may lead to disproportionate costs associated with the manufacturing of these components because significant amounts of material are scrapped during the fabrication process.

Fig. 3. Ultrasonic spot welding system and welding tools used to remove the sintered powder from the internal fluid channels of the heat exchanger.

1.2.3 Modified Heat Exchanger Design

A second heat exchanger design was created by S-RAM Dynamics in order to try to optimize the heat flow for the specific application. The design was similar in size to the original heat exchanger. This design was limited to the constraints of the Arcam EBM process. Because of the height of the second heat exchanger, only one heat exchanger was fabricated at a time inside of the Arcam EBM chamber. Two attempts were made at fabricating the heat exchanger as show in Figure 4. However, neither of the builds was completed successfully. In one case, the Arcam EBM machine failed after completing approximately half of the total build volume (right part in Figure 4). The second attempt at the build was nearly complete, but the top of the component swelled due to the complex overhanging portion of the geometry (left side of Figure 4).

Fig. 4. Additional heat exchanger designed by S-RAM Dynamics. Attempts at fabricating this heat exchanger were conducted at ORNL.

1.3 IMPACTS

The two heat exchangers successfully printed at the ORNL MDF will be used as the regenerator for an air cycle heat pump. Both heat exchangers will be configured linearly to achieve the total heat exchanger size needed for the heat pump. The heat pump fabrication was completed in January. 2016 and is currently undergoing component testing on the drive system, compressor and expander valve operation and other mechanical systems. The heat exchangers will be integrated into the heat pump in June 2016 to begin pressure testing the system, including hydrostatic pressure tests of the heat exchangers. Heat pump testing will begin in July 2016 and sensors will be installed on the heat exchangers to determine the actual inlet and outlet temperatures and pressures of the working gas. The data to determine the efficiency of the heat exchangers will be completed by September 2016.

S-RAM's proposed heat pump design is expected to generate annual energy savings greater than 50% as compared to current heat pump, packaged heating and rooftop units resulting in a national total energy savings of 1.0 quadrillion BTUs (quads) for 100% adoption, and 0.15 quads for a market penetration of 15%.

The energy savings potential was calculated by using the "Guide for Evaluation of Energy Savings Potential" published by the Office of Energy Efficiency and Renewable Energy. Figure VI-1 provides a summary of the savings calculation based on the Guide's energy end use data. Potential market was calculated using the heating, ventilation, and air conditioning (HVAC) market penetration tool.

1.4 CONCLUSION

Additive manufacturing using electron beam melting was successfully used to create a complex heat exchanger from Ti-6Al-4V material. From the initial design, two heat exchangers were built in a single run. The total build time was the longest total build in the EBM system at over 150 hours. This was significantly longer (nearly 2X) the normal filament life on the system. A new technique for removing partially sintered material from the internal passages in complex geometries was developed. The technique utilized ultrasonic vibrations from a conventional ultrasonic spot welding system in order to break up the sintered powder. However, it should be noted that this technique was not capable of completely restoring the sintered material back into powder. The material would need to be further processed in the powder recovery system and sieved in order to return it to use in the EBM machine. An attempt was made a creating a second heat exchanger with an optimized design with remaining funding. However, neither of the heat exchangers completed successfully due to 1) the filament failure during the process and 2) swelling due to the complex design and overhanging surface in the design.

2. PARTNER BACKGROUND

S-RAM Dynamics, based in Nashville, Tenn., is a privately-held energy technology company focused on commercializing next generation, energy-efficient technologies including natural refrigerant HVAC (heating, ventilation, and air conditioning) applications, waste heat to power engines and power generation engines. The company has 47 patents for its variable power conversion technology.