OAK RIDGE
NATIONAL LABORATORY
MANAGED BY UT-BATTELLE
FOR THE DEPARTMENT OF ENERGY

ORNL/TM-2013/499
SMR/ICHMI/ORNL/TR-2013/06

Johnson Noise Thermometry Data-Acquisition Backend

October 2013

Prepared by

Charles L. Britton Jr.
N. Dianne Bull Ezell
Michael Roberts

Approved for public release.
Distribution is unlimited.

UT-BATTELLE
ORNL-27 (4-00)

DOCUMENT AVAILABILITY

Reports produced after January 1, 1996, are generally available free via the U.S. Department of Energy (DOE) Information Bridge.

Web site http://www.osti.gov/bridge

Reports produced before January 1, 1996, may be purchased by members of the public from the following source.

National Technical Information Service
5285 Port Royal Road
Springfield, VA 22161
Telephone 703-605-6000 (1-800-553-6847)
TDD 703-487-4639
Fax 703-605-6900
E-mail info@ntis.gov
Web site http://www.ntis.gov/support/ordernowabout.htm

Reports are available to DOE employees, DOE contractors, Energy Technology Data Exchange (ETDE) representatives, and International Nuclear Information System (INIS) representatives from the following source.

Office of Scientific and Technical Information
P.O. Box 62
Oak Ridge, TN 37831
Telephone 865-576-8401
Fax 865-576-5728
E-mail reports@osti.gov
Web site http://www.osti.gov/contact.html

This report was prepared as an account of work sponsored by an agency of the United States Government. Neither the United States Government nor any agency thereof, nor any of their employees, makes any warranty, express or implied, or assumes any legal liability or responsibility for the accuracy, completeness, or usefulness of any information, apparatus, product, or process disclosed, or represents that its use would not infringe privately owned rights. Reference herein to any specific commercial product, process, or service by trade name, trademark, manufacturer, or otherwise, does not necessarily constitute or imply its endorsement, recommendation, or favoring by the United States Government or any agency thereof. The views and opinions of authors expressed herein do not necessarily state or reflect those of the United States Government or any agency thereof.

ORNL/TM-2013/499
SMR/ICHMI/ORNL/TR-2013/06

JOHNSON NOISE THERMOMETRY DATA-ACQUISITION BACKEND

Author(s)
Charles L. Britton Jr
N. Dianne Bull Ezell
Michael Roberts

Date Published: October 2013

Prepared by
OAK RIDGE NATIONAL LABORATORY
Oak Ridge, Tennessee 37831-6283
managed by
UT-BATTELLE, LLC
for the
U.S. DEPARTMENT OF ENERGY
under contract DE-AC05-00OR22725

CONTENTS

Page

CONTENTS iii
LIST OF FIGURES v
ABSTRACT 1
1. SYSTEM DESCRIPTION 1
2. TESTING RESULTS TO DATE 5
4. CONCLUSION 7
5. REFERENCES 7

LIST OF FIGURES

Figure		Page
1	JNT System Block Diagram	1
2	Box Photograph	2
3	Digitizer Block Diagram	3
4	Filter/Interface Board Schematic	4
5	Low-Voltage Power Supply Box	5
6	Picture of the Complete System	6
7	Run with excess EMI	7

ABSTRACT

This document is intended to summarize the development and testing of the data acquisition module portion of the Johnson Noise Thermometry (JNT) system developed at ORNL. The proposed system has been presented in an earlier report [1]. A more extensive project background including the project rationale is available in the initial project report [2].

1. SYSTEM DESCRIPTION

As presented in the previous report [1], the JNT system consists of several parts as shown in Fig. 1. This report describes specifically the development of the "Digitizer" and "AC-DC Power Supply" blocks, which encompass the digital data acquisition and power-supply portions of the overall system.

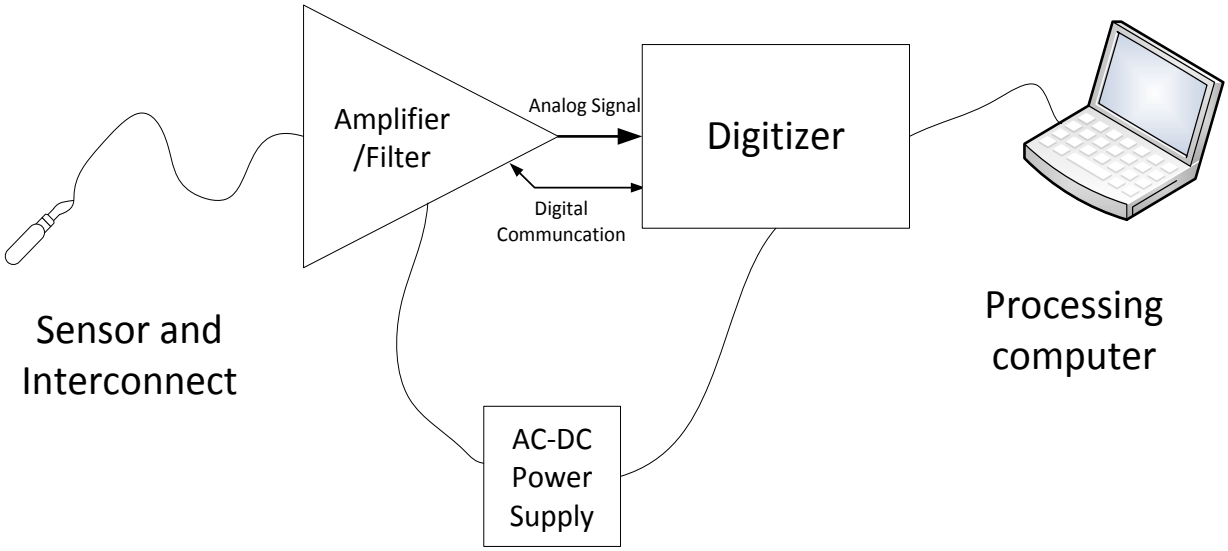

Fig. 1. JNT System Block Diagram.

Digitizer Description

In practice, the Amplifier/Filter and Digitizer are both contained in a single steel box (shown in Fig. 2) with AC and DC power fed in from an external supply. The digitizer, shown in Fig. 3, receives the processed analog inputs from the amplifier/filter module and translates them into digital information, which is then sent to the signal processing program residing on the processing computer. The waveform synthesizer generates the pilot tone or random noise inputs to the processing electronics. The external computer acts as the system controller, which programs and operates the both the digitizer and the digital waveform synthesizer.

Because there are numerous commercial options for the ADCs and because of the limited time and budget for this project, it was decided to go with a mostly commercial, off-the-shelf system. The individual modules are described below.

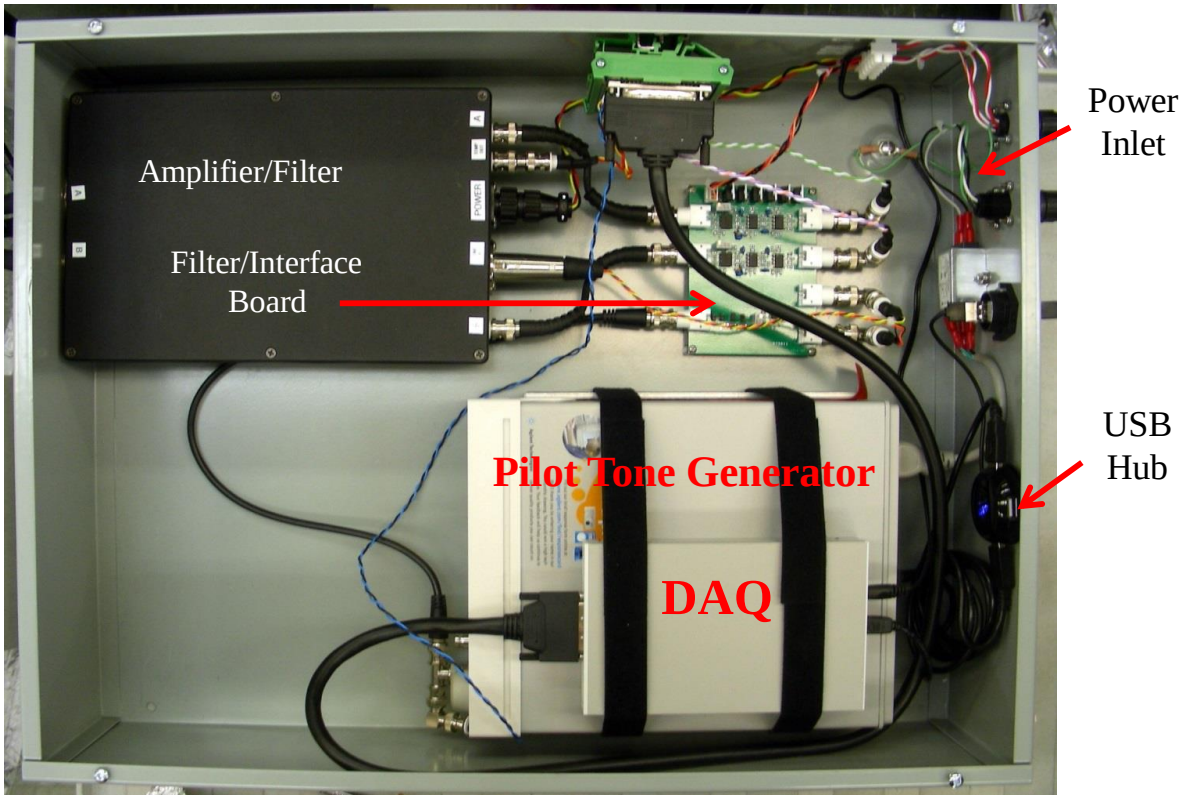

Fig. 2. Box photograph.

1. <u>Data Acquisition System (DAQ) – (Agilent U2531A)</u>
   The U2531A is the heart of the data-acquisition system. The device contains four 14-bit, 2-MSa/s analog-digital converters (ADCs). In addition, it contains TTL-programmable digital outputs, digital counter channels, and 2 analog output channels. The only functionality used in this application is the set of four ADCs. Two of the ADCs are used for signals from the noise channels, while one is used for the DC ohmmeter signal and the fourth handles the pilot-tone digitization. The device is programmed and controlled from a standard USB interface, which is connected through a USB hub to the control computer. To minimize internally-generated electromagnetic interference, the U2531A is wrapped in copper mesh and single-point grounded to the main chassis.

2. <u>Pilot-Tone Generator – (Agilent 33220A Digital Waveform Generator)</u>
   The pilot tone is a frequency-modulated sine wave that is swept from 1 kHz to 100 kHz with a very stable amplitude of approximately 0.75 V peak-peak. The Agilent 33220A is used for this function, as it is capable of 14-bit, 50 Msa/s output. The

device is also programmed and controlled from the USB interface, which is connected through a USB hub to the control computer. Again, to minimize internally-generated electromagnetic interference, the 33220A is also wrapped in copper mesh and single-point grounded to the chassis.

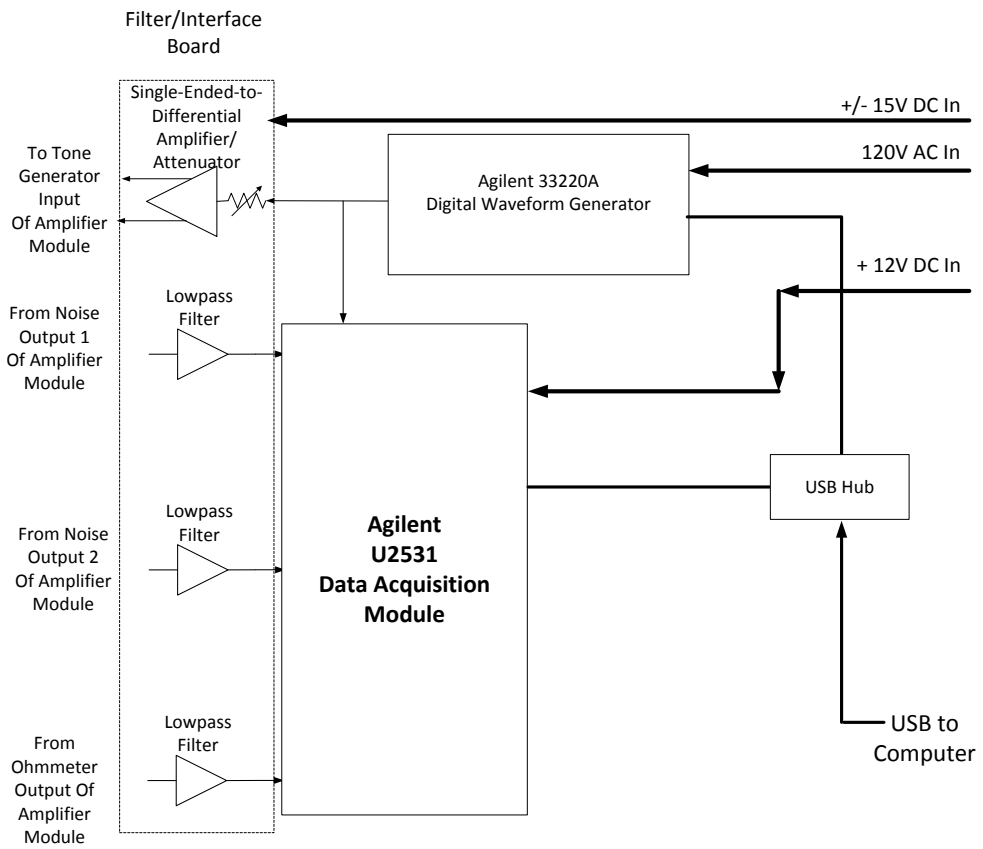

Fig 3. Digitizer Block Diagram.

3. <u>Filter/Interface Board</u>

The Filter/Interface Board (FIB), whose schematic is shown in Fig. 4 provides connections between the Amplifier Module and the rest of the system. The FIB's functions are as follows:

1. The two noise-channel outputs are fed from the Amplifier Module into two of the input channels of the Agilent U2531 through the FIB. The FIB provides an adjustable voltage gain of 2-20 and further low-pass filtering, with cutoff frequencies of approximately 40 kHz. The DC voltage supply

is taken from the input ± 15 V source and locally regulated to ± 12 V.

2. The board also contains the circuitry to convert the single-ended output of the Agilent 33220A into an attenuated (~70 dB) differential drive suitable for the Amplifier Module.

4. Low-Voltage Power Supplies.

The power supplied to the digitizer system consists of clean DC voltage driver from two linear DC power supplies and 120V AC, all controlled by a single switch on the power-supply box and shown in Fig. 5. The Agilent U2531 is supplied from the factory with an external 12-V, 2-A switching supply which was, in earlier tests, found to inject noise into the Amplifier/Filter Module. To mitigate this for all possible configurations, we replaced the supply with a linear, non-switching DC supply and enclosed it in the box with the system +/- 15-V supply.

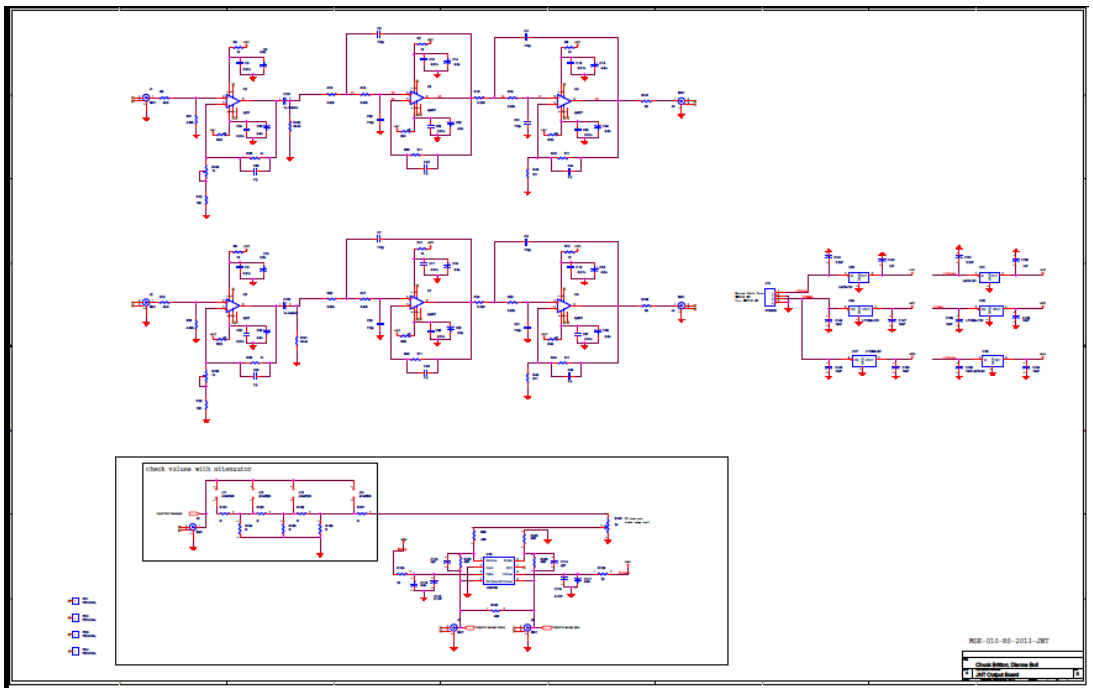

Fig. 4. Filter/Interface Board Schematic.

5. Computer Interface.

The interface was chosen to be Universal Serial Bus (USB) for two reasons. First, consultation with local and industry colleagues indicated that for this prototype, the type of connectivity was not critical for the demonstration. Second, the most common interface for benchtop electronic equipment is USB due to its simplicity and ease of use. Consequently, we decided to use USB for the entire system. A USB hub was also installed in the box so that we could readily communicate with the two Agilent modules, both of which use USB interfaces.

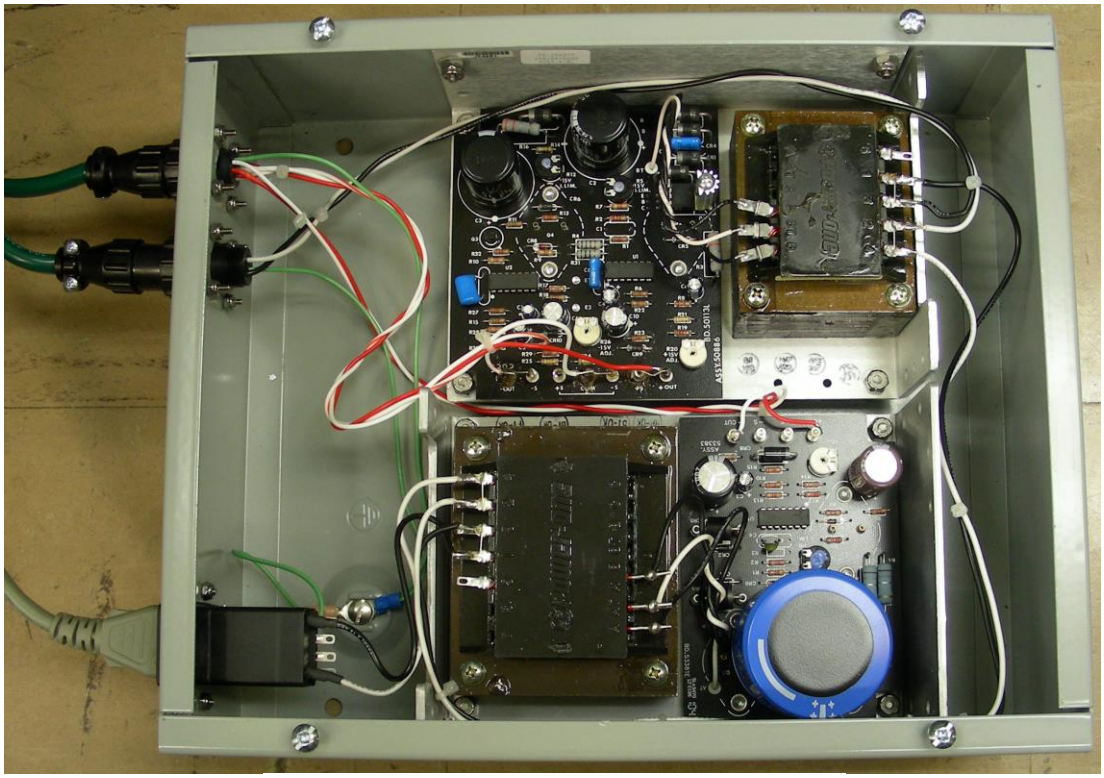

Fig. 5. Low-Voltage Power Supply Box.

Processing Computer/ Interface Description

The computer used for this system is a standard device running Windows™ 7. We are currently running the lab setup on a Dell desktop using LabView™ as the programming software for the JNT calculations and control; we plan to remain with that platform combination through our present development/demonstration cycle. The machine is in a mini-tower configuration, which should be adequate for transporting to various sites for testing. The entire system is shown in Fig. 6 sitting on a portable cart. The steel box is on top, with the power-supply module on the bottom.

2. TESTING RESULTS TO DATE

After final setup of the system and some required internal adjustments, preliminary testing was performed in a laboratory environment. The cable length between the RTD and Amplifier input was approximately three feet. Four temperature points were tested: 0°C, room temperature (23°C), 183°C, and 373°C. The elevated temperatures were generated in a tube-furnace controller run in burp mode. The initial performance results are displayed in Fig. 7. From these results, for constant environmental noise situations, it was concluded the system has been able to maintain an overall error of less than ±1°C. It is important to understand what the requirements are for a realistic JNT operational environment within a reactor and whether ±1°C meets these constraints.

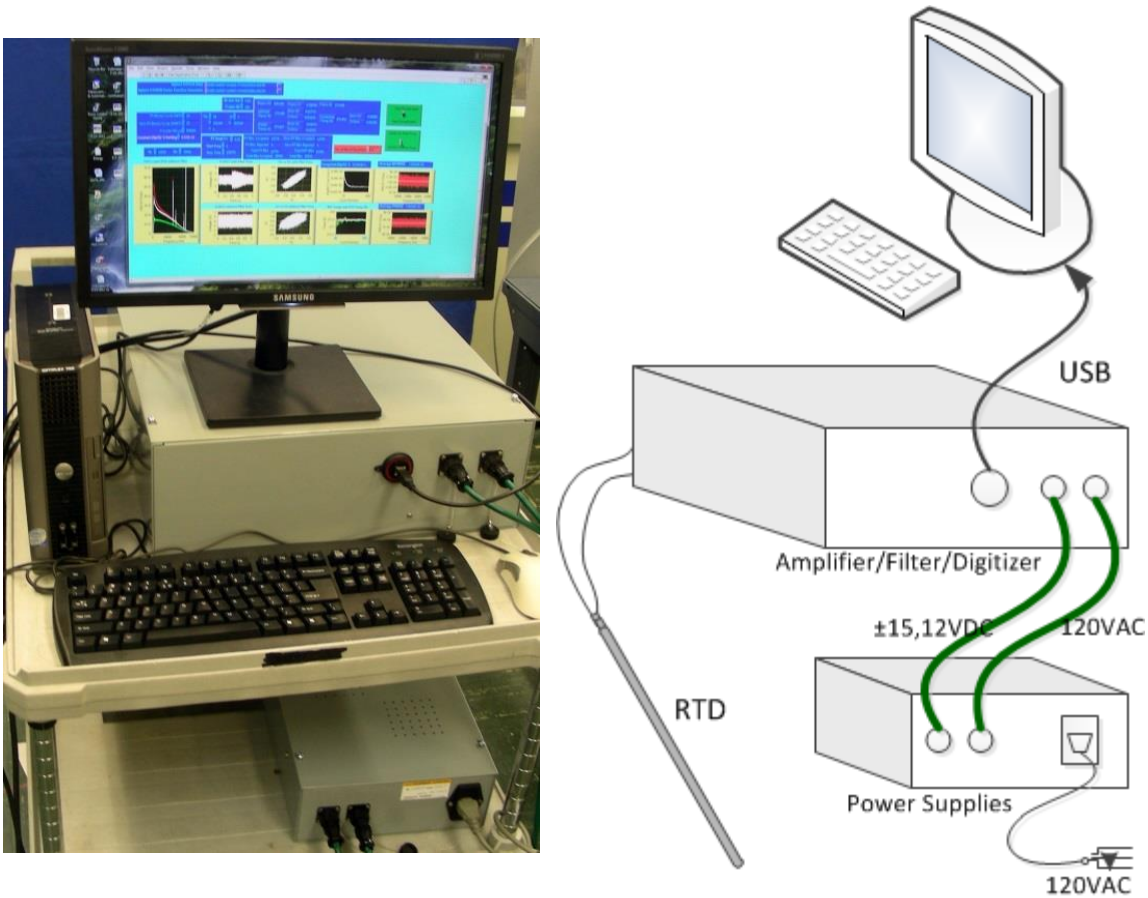

Fig. 6. Picture of the Complete System.

Table 1. Preliminary Test Results

RTD Temp. (C) (Error bar +/- 0.5C)	RTD Temp. (K)	JNT Temp. (K)	JNT-RTD Difference (K or C)
0.298	273.458	273.451	-0.007
22.388	295.548	295.410	-0.138
182.898	456.058	456.089	0.031
372.826	645.986	645.657	-0.328

Different lab environments showed different amounts of EMI pickup when using the longest cable between the RTD and the system. These were distributed throughout the spectrum up to 55 kHz, our highest normal operating frequency, as shown in the spectrum in the lower left of Fig. 7. We then modified the software to allow temperature calculations in multiple,

discontinuous bandwidths to allow rejection of frequency regions in which there are high levels of pickup.

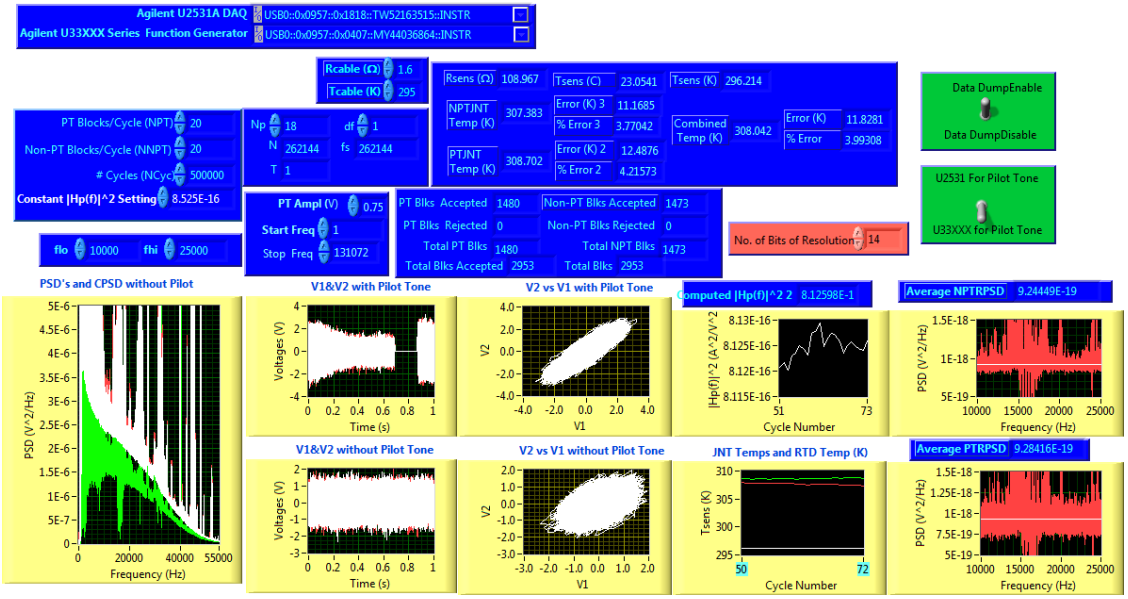

Fig 7. Run with excess EMI.

Future Work and Testing

In the laboratory environment there was a demonstrated difference between the various measurements using different cable lengths. We are therefore testing the new system in various internal rooms with varying cable lengths. After this, we will be placing the system into a realistic environment such as the High-Flux isotope Reactor at ORNL.

3. CONCLUSION

The entire integrated system was successfully designed, constructed, and tested at ORNL. The system contains the input amplifiers, data acquisition, pilot-tone generation, power filtering and USB interface in a single box. Testing has shown that the device is working as designed and is presently being tested under various environmental conditions to determine the effects of EMI on the measurement.

4. REFERENCES

[1] Charles L. Britton, Jr., Michael Roberts, Nora D. Bull, Lou Qualls, and David E. Holcomb, “Johnson Noise Thermometry Requirements” ORNL/TM-2013/2, SMR/ICHMI/ORNL/TR-2013/01, January 2013.

[2] Charles L. Britton, Jr., Michael Roberts, Nora D. Bull, , David E. Holcomb, and Richard T. Wood, “Johnson Noise Thermometry for Advanced Small Modular Reactors” ORNL/TM-2012/346, SMR/ICHMI/ORNL/TR-2012/01, September 2013.