LETTER REPORT

Reactor and Nuclear Systems Division

Project Title:	Proposal for HFIR Critical Facility to Support LEU Fuel Conversion
Subject of Document:	Technical Justification for a Low-Power Critical Facility at the High Flux Isotope Reactor Site
Type of Document:	Letter Report
Authors:	D. G. Bowen and L. M. Petrie, Jr.
Date Published:	December 2012
Responsible Individual:	David G. Renfro

Prepared for the
Oak Ridge National Laboratory
Research Reactors Division

Prepared by
OAK RIDGE NATIONAL LABORATORY
P. O. Box 2008
Oak Ridge, Tennessee 37831-6170
managed by
UT-BATTELLE, LLC
for the
Department of Energy
under contract DE-AC05-00OR22725

CONTENTS

Page

LIST OF FIGURES v

1. INTRODUCTION 1

1.1 HFIR DESCRIPTION AND LEU CORE CONVERSION BACKGROUND 1

1.1.1 Effect of the Core Conversion on Mission Performance 1

2. HFIR PROPOSED LOW-POWER CRITICAL FACILITY 2

2.1 CURRENT CONFIGURATION 2

2.2 HISTORY OF HFIR HEU CORE TESTING AND NEED FOR Y-12 CRITICAL EXPERIMENT FACILITY 4

3. REACTOR PHYSICS PARAMETERS REQUIRED TO PREDICT POST-CONVERSION PERFORMANCE 6

3.1 CONFIDENCE IN CURRENT CALCULATION METHODOLOGIES FOR THE HFIR HEU CORE 6

3.2 USING THE LPCF FOR VERIFICATION AND VALIDATION OF HFIR LEU CORE PERFORMANCE COMPUTATIONS 7

3.2.1 Neutron Flux and Core Power Distribution Measurements 8

3.2.2 Flux Trap and Coolant Void Coefficients of Reactivity 8

3.2.3 Temperature Coefficients of Reactivity 9

3.2.4 Fuel and Fuel Void Coefficient of Reactivity 9

3.2.5 LEU Core Cycle Length 10

3.2.6 Control Rod Differential and Integral Worths 10

3.2.7 Shutdown Margin 10

3.2.8 Neutron Lifetime and Effective Delayed Neutron Fraction Determination 11

3.2.9 Critical and Subcritical Measurements for Use in the Development of Criticality Safety Evaluations 11

3.3 THE USE OF SENSITIVITY AND UNCERTAINTY METHODS TO ASSIST WITH VALIDATION EFFORTS 12

4. LOW-POWER CRITICAL FACILITY CONFIGURATION 13

4.1 SAFETY ANALYSIS REPORT AND TECHNICAL SAFETY REQUIREMENTS FOR THE LOW-POWER CRITICAL FACILITY 13

4.2 PROPOSED CRITICAL POOL CONFIGURATION 14

4.2.1 Critical Pool Design Modifications 14

5. ALTERNATIVE CRITICAL FACILITIES 15

5.1 DOMESTIC FACILITIES 16

5.1.1 Los Alamos National Laboratory (LANL) NCERC Facility 16

CONTENTS (continued)

Page

5.1.2 SNL Critical Experiment Facility (CEF) 16
5.1.3 Advanced Test Reactor Critical Experiment Facility 16
5.1.4 Rensselaer Polytechnic Institute (RPI) Reactor Critical Facility (RCF) 17
5.2 INTERNATIONAL FACILITIES 17
5.2.1 Chalk River Critical Experiment Facility 17
5.2.2 PROTEUS Critical Experiment Facility 17
5.2.3 Japan Atomic Energy Agency Reactor Critical Facilities 18
5.2.4 Criticality Safety Laboratory at Valduc, France 18
5.2.5 Russian Critical Experiment Facilities 19
6. OTHER USES FOR A LOW-POWER CRITICAL FACILITY 19
6.1 REACTOR FUEL DESIGN SUPPORT ACTIVITIES 19
6.2 USING A LPCF FOR TRAINING PURPOSES 20
6.2.1 Proposal for a Nuclear Criticality Safety Training Center at ORNL 20
6.3 CONDUCTING BENCHMARK-QUALITY EXPERIMENTS AT A LPCF 21
7. CONCLUSION 21
8. REFERENCES 22

LIST OF FIGURES

Page

Fig. 1. Location of the critical pool at the HFIR facility 3

Fig. 2. Critical pool at the HFIR facility 3

Fig. 3. HFIRCE-1 core at the Y-12 critical experiment facility 5

Fig. 4. Tank assembly for HFIRCE-2 at the Y-12 critical experiment facility 5

Fig. 5. Examples of experiments performed for criticality safety purposes (HFIRCE-2 and 3) at Y-12 CEF with the HFIR HEU core 12

Fig. 6. One possible configuration of the LPCF in the critical pool 15

1. INTRODUCTION

The Oak Ridge National Laboratory (ORNL) has been working for some time on efforts to convert the High Flux Isotope Reactor (HFIR) from using high-enriched uranium (HEU) fuel to low-enriched uranium (LEU) fuel as part of an effort sponsored by the U.S. Department of Energy's (DOE's) National Nuclear Security Administration (NNSA) through the Global Threat Reduction Initiative/Reduced Enrichment for Research and Test Reactors (RERTR) Program. A Low-Power Critical Facility (LPCF) has been proposed at the HFIR facility to support LEU conversion activities. Specifically, the LPCF would be used to validate extensive computational analyses that have been used to determine if the safety and scientific performance of HFIR can be maintained after the core conversion is complete. Details of proposals can be found elsewhere.[1,2] The use of the critical data was crucial for the HFIR design in the 1960s. During the initial HFIR design process, four series of critical experiments[3-12] were performed to ensure that core parameters (e.g., reactivity coefficients, power distribution, control rod worths, etc.) supported safety and performance goals. The HFIR HEU core design was modified as necessary based upon the results of the critical measurements. In fact, the third series of experiments, denoted HFIRCE-3, was performed because of uncertainties in computational methods at the time. Even with better computational tools and nuclear data, there are still uncertainties in the computational methods that need to be determined and considered in the core design process. Converting the HFIR HEU core to an LEU core is a significant modification to the reactor, and a LPCF would be invaluable for verifying computational studies performed to date.[13]

1.1 HFIR DESCRIPTION AND LEU CORE CONVERSION BACKGROUND

As previously discussed,[13] the HFIR is an 85-MW, very high flux, pressurized light-water-cooled and moderated, flux-trap-type reactor, which is operated at ORNL. The missions of HFIR are currently to support neutron scattering experiments, isotope production, and materials irradiation research. The reactor core consists of a series of concentric annular regions: a central flux trap containing vertical experimental targets surrounded by two fuel elements separated by a thin water region, a region containing two control plates, a beryllium reflector, and a water region to the edge of the pressure vessel, which is located in a pool of water. More information about the HFIR reactor configuration and operations can be found elsewhere.[3,14]

Two reports[13,15] have discussed the background on the drivers for the HFIR core conversion from HEU to LEU fuel. The RERTR program was established with the intent of minimizing and, to the extent possible, eliminating the use of HEU in civilian nuclear applications by working to convert research and test reactors and radioisotope production processes to the use of LEU fuel and targets throughout the world.[15] Toward this end, this program has initiated and supported various studies related to fuel development and engineering studies to convert high-performance research reactors from HEU fuel to LEU fuel. These facilities include the HFIR, the Advanced Test Reactor (ATR), the National Institute of Standards and Technology (NIST) Research Reactor, the Missouri University Research Reactor (MURR), and the Massachusetts Institute of Technology Reactor (MITR-II).

1.1.1 Effect of the Core Conversion on Mission Performance

The HEU fuel to LEU fuel conversion is a significant core change and could affect mission and safety performance. To ensure mission performance will not be affected by the core conversion, a variety of assumptions have been made to proceed with studying the key parameters of interest for the reactor design. With respect to mission performance, the following assumptions have been made.

- The HFIR LEU core should have similar flux levels compared to the HEU core at key locations and cycle length.*
- The core dimensions should remain the same.
- There is no change in the involute fuel geometry and minimum clad thickness with physical dimensions that are similar to the HEU core.
    - Based on computational studies, the fuel contouring is likely to change to optimize the core power distribution and maintain a radially flat power distribution.
- Margins of safety as discussed in the bases for the Technical Safety Requirements shall be maintained.
- No change is made in core coolant flow requirements or primary coolant system pressure.
- Each fresh LEU Inner Fuel Element (IFE) and Outer Fuel Element (OFE) shall separately be subcritical under all normal and credible abnormal conditions with conservative reflector conditions (concrete/full water).
- No change is made to the methods now approved for handling and storing irradiated fuel elements.

To determine the impacts to the key parameters of interest with respect to reactor design, many studies have been performed. The latest study[13] is comprehensive and examines many of the key parameters of interest (e.g., fuel and flux trap void coefficients of reactivity, coolant temperature coefficient of reactivity, effect of fuel grading, and thermal hydraulics). Many of these studies have shown that the more dense LEU fuel† will provide similar performance as the HEU fuel. The favorable results presented in these studies imply minimal impact to overall HFIR mission performance; however, experimental measurements are highly desirable to validate the results of the HFIR core computations. Efforts to convert other research reactor facilities, such as the Neutron Radiography (NRAD) Reactor at Idaho National Laboratory,[16] have resulted in issues related to accurately predicting excess core reactivity with the computational techniques used. Critical experiments could have prevented some of the issues experienced with the NRAD Reactor conversion because experimental data could have been available to verify and validate design calculations.

2. HFIR PROPOSED LOW-POWER CRITICAL FACILITY

2.1 CURRENT CONFIGURATION

The critical pool at the HFIR facility is located east of the HFIR spent fuel pool, as shown in Fig. 1. A photograph illustrating the current configuration for the critical pool is shown in Fig. 2. The critical pool is 8 ft in diameter, 25 ft deep, and is lined with 0.25-in. stainless steel. The capacity of the critical pool is about 10,000 gallons of demineralized water. The coolant can be cleaned to maintain the water chemistry and can be circulated through heat exchangers to control the coolant temperature. The critical pool water level can be monitored and controlled from the HFIR control room. There are also confinement system vents to mitigate gaseous releases from the critical pool. As discussed in the LPCF proposal,[17] there are two 6-in. pool wall penetrations that are present for either mechanical use or for control or data acquisition needs. The pool was constructed with special concrete shielding for personnel protection. Because of the close proximity and availability of the Y-12 critical facility at the time of the initial HFIR

*A report[13] discusses the raising of core power to 100 MWth to ensure flux levels are sufficient when increasing the quantity of ^{235}U in the LEU core.

†The HFIR LEU fuel is to consist of a high-density monolithic alloy U-10Mo, which contains 90 wt % uranium and 10 wt % natural molybdenum. It has a density of 17.02 g/cm^3 and an enrichment of 19.75 wt % ^{235}U.[13]

construction, critical experiments were never performed in the critical pool. The current facilities would have to be upgraded with the necessary infrastructure to perform critical measurements (e.g., neutron detectors, gross and fine reactivity control systems, soluble poison capability, regional temperature control, instrumentation and calibration capabilities, etc.). Some storage capability exists for the HFIR HEU cores in or near the HFIR and critical pools; however, additional storage capability may be needed to ensure that HFIR and LPCF operations can be performed efficiently and safely.*

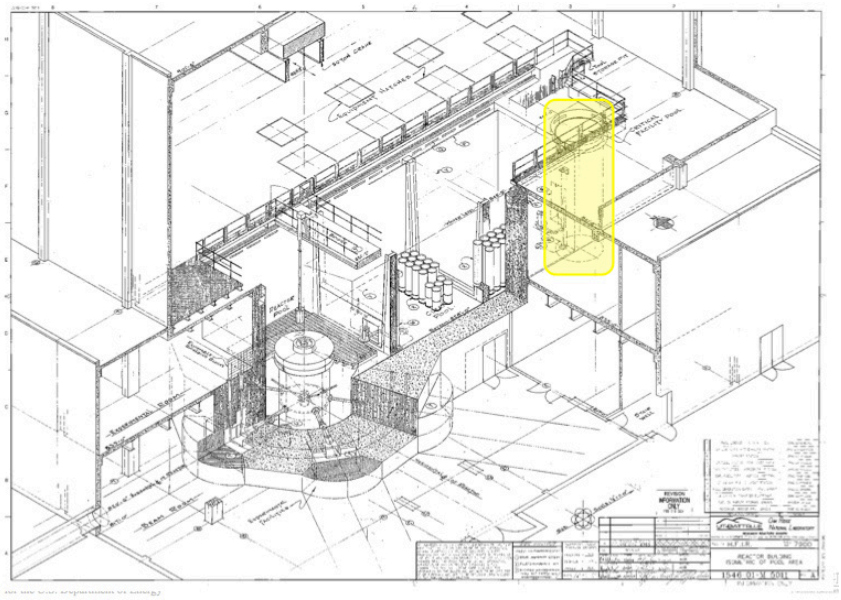

Fig. 1. Location of the critical pool at the HFIR facility. *Source*: Ref. 17.

Fig. 2. Critical pool at the HFIR facility. *Source*: Ref. 17.

*Current nuclear criticality safety limits may need to be reconsidered as LPCF operations better defined.

2.2 HISTORY OF HFIR HEU CORE TESTING AND NEED FOR Y-12 CRITICAL EXPERIMENT FACILITY

The high-performance HFIR HEU cores were extensively tested at the Y-12 Critical Experiment Facility (CEF) in the 1960s[3] to measure important parameters relevant to nuclear criticality safety and reactor physics. These experiments were conducted to measure and determine the following key operational parameters for the HFIR: power distribution, moderator-poison data, symmetrical control element positions in the clean core, shutdown margins, control element differential worth, worth of target and voids in the flux trap region, temperature coefficients, neutron lifetime, and effective delayed neutron fraction. These measurements were conducted as four series critical experiments.[3]

- HFIRCE-1 – This was a solution critical experiment[4] that was used to explore the basic characteristics of the central flux trap geometry. The solution used in the experiment was $UO_2(NO_3)_2$ enriched to 93.5 wt % in ^{235}U and dissolved in mixtures of D_2O and H_2O. This experiment was conducted in a 44-in. OD × 36-in.-high multi-chamber core tank (Fig. 3) installed at the Y-12 critical experiment facility. The experiment involved fissile solution instead of plate-type fuel elements and heavy water was used in place of the beryllium reflector.

- HFIRCE-2 – This series of experiments was performed at the Y-12 critical experiment facility and involved a complete mockup of the primary HEU core components, including the fuel element, control rods, and the beryllium reflector.[5-12] To determine power distribution data, removable foils were inserted into the fuel plates and irradiated in the core. This experiment resulted in a decision to increase the total core fuel loading from 8.0 to 9.4 kg ^{235}U. The fuel and burnable neutron poison distribution (radial) in the fuel was modified as a result of this experiment. The control rod design was also modified based upon undesirable reactivity characteristics and fabrication issues. One of the reasons the modifications were needed is the uncertainties associated with the calculational techniques used for the initial design work.

- HFIRCE-3 – These experiments were performed because there was concern about extrapolating the effects of core changes with sufficient accuracy. These experiments were nearly identical to HFIRCE-2 with the exception of the boron loading and temporary use of a simulated final control rod design. Other core components were essentially identical to the core used in HFIRCE-2. This experiment was performed at the Y-12 critical experiment facility.

- HFIRCE-4 – A fourth set of experiments was conducted using the HFIRCE-3 core in the HFIR pressure vessel with the final control rod composition design (Eu_2O_3-Ta-Al). Two different production cores were utilized in these experiments, one manufactured by ORNL and another manufactured by a vendor.[18] These experiments were completed because of a change in the control-region dimensions, to fill gaps in the experimental data, and to verify Y-12 critical experiment facility and the reactor facility data. Measurements were also made with various flux trap configurations. No further changes were recommended after these experiments were completed.

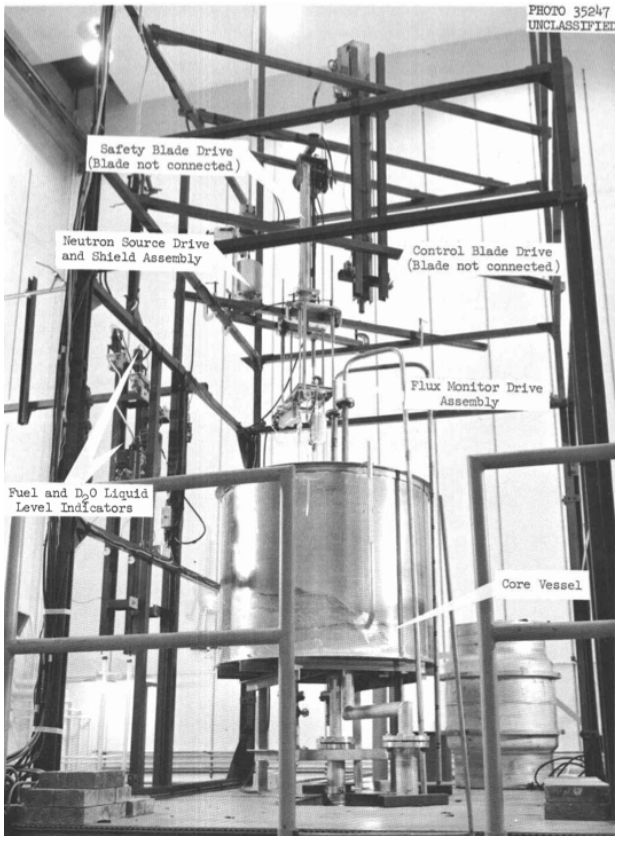

Fig. 3. HFIRCE-1 core at the Y-12 critical experiment facility. *Source*: Ref. 4.

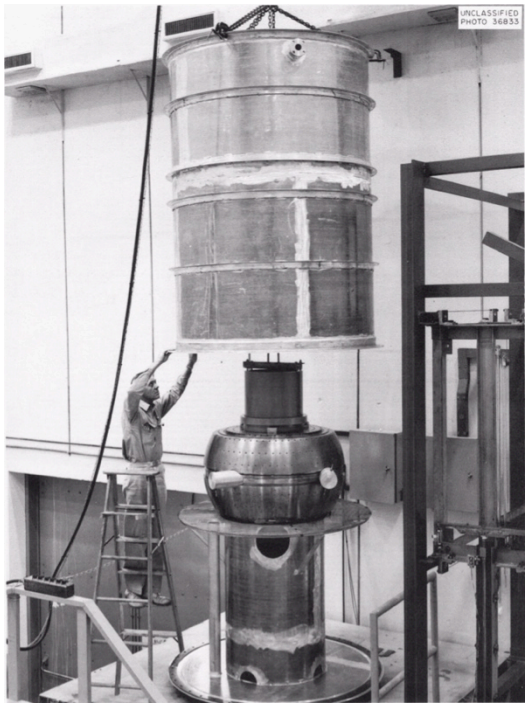

Fig. 4. Tank assembly for HFIRCE-2 at the Y-12 critical experiment facility. *Source*: Ref. 8.

After these reactivity tests were complete, other measurements were performed to validate the fuel design before reactor startup. From the mid-1960s through March 1987, the Y-12 CEF was used to perform reactivity measurements of each of the HFIR fuel assemblies moderated and reflected by water prior to being used in the HFIR pressure vessel. The Y-12 CEF shut down operations later that year. These experiments were completed to provide a measure of conformity in the fuel element manufacturing process to the core design specifications, specifically with the ^{235}U and burnable poison content of the core.[19,20] More than 300 HFIR HEU production cores were measured at the Y-12 CEF prior to being installed in the HFIR facility, although this is not expected to occur for the HFIR LEU core because of better manufacturing and computational techniques today and more than 50 years of operating experience at the HFIR facility. An alternative method for verifying the shutdown margin for HFIR fuel assemblies was developed by ORNL in 1987, which eliminated the need for reactivity measurements to be made.

3. REACTOR PHYSICS PARAMETERS REQUIRED TO PREDICT POST-CONVERSION PERFORMANCE

3.1 CONFIDENCE IN CURRENT CALCULATION METHODOLOGIES FOR THE HFIR HEU CORE

ORNL studies have been performed to determine if neutronic and depletion calculations could validate and verify some of the HFIR critical experiments performed in the 1960s. In the absence of a critical experiment facility to validate calculations directly, a systematic approach was developed to verify the calculation tools necessary that would ultimately be used to predict post-conversion HFIR operations with an LEU core. As will be discussed below, LEU cores will perform differently from the HEU cores, in part because of the increased concentration of ^{238}U in the fuel.

One study[15] performed an analysis to validate an MCNP,[21] a Monte Carlo transport code, model of the HFIR HEU core using the HFIRCE-3 critical experiment for determining core power distributions. The MCNP model was generated for other work[22] to accurately represent the HFIR cycle 400 HEU core configuration to determine if the calculation methodology developed could accurately predict the results of the critical experiments. For example, the MCNP model considered radial, homogeneous mixtures of fuel and water to approximate the fuel element configuration because of the difficulty of modeling the involute fuel geometry. The report concluded that the homogenous fuel mixture could be better represented with perhaps more radial regions in the fuel matrix because of the variations of fissile poison content as a function of radius (for the inner fuel element). Further, the use of ENDF/B-VII cross-section data was also discussed to ensure the latest neutron cross-section data were used in the calculations. Otherwise, this report concluded that the MCNP model results compared well to HFIRCE-3 results and that this methodology was acceptable for use to support the HFIR LEU core conversion activities. Another study[23] involved analysis using a Monte Carlo–based methodology, ALEPH[24], which couples the MCNP and ORIGEN 2.2 codes to calculate the nuclide inventory at end-of-cycle (EOC) conditions for cycles 4, 16, and 35. This depletion calculation methodology for an EOC condition for the HEU HFIR core is compared to measured data from uranium mass spectrographic analysis. According to the report, the ability to predict post-irradiation nuclide compositions (EOC conditions) with this calculation methodology provides good results for the HEU HFIR fuel.

These efforts are examples of tasks directed to validate computational techniques with direct measurements to establish confidence with their use in predicting the behavior of an LEU HFIR core. Using the validated computational methodologies for an LEU HFIR core can provide some good information to assist with fuel contouring and core design parameters; however, these computations will also require direct measurements to be used for validation purposes to ensure the HFIR configuration performs as expected with respect to normal and transient behavior.

3.2 USING THE LPCF FOR VERIFICATION AND VALIDATION OF HFIR LEU CORE PERFORMANCE COMPUTATIONS

The conversion of the HFIR HEU core to an LEU core has been difficult due to the unique and complex nature of the fuel and core design and the requirement that the HFIR LEU core retain its high level of performance. Further, the core conversion must not impact mission performance and capability. Complex computational methodologies have been developed to enable conversion studies to be performed to predict how the HFIR LEU core would perform with respect to current capabilities. As discussed in Section 3.1, it was determined that the HFIR HEU calculation methodologies were adequate to conduct in-depth studies (e.g., coefficients of reactivity, transient behavior) for an LEU core. Even with a proven calculation methodology for a HFIR HEU core, the HFIR LEU core is inherently different from the HEU core and may not accurately predict core performance parameters. A proposal[17] for the LPCF stated that a LPCF is needed to verify the HFIR LEU core performance and neutronics analyses and to ensure that manufacturing processes meet design specifications.

The most recent HFIR core conversion study[13] summarizes the results of in-depth analyses of various reactor parameters for the proposed LEU core design and includes direct comparison with the results of calculational studies for the HEU core. This conversion study documents a computational methodology involving MCNP, the Monte Carlo-based depletion tool VESTA,[25] and the SCALE[26] code system (used for source term calculations). This methodology was used to examine key performance, safety, and safeguards parameters for the HFIR LEU core. This computational methodology approximates the involute fuel plate geometry with a homogenized representation of fuel, clad, and coolant (water) to simplify the modeling process. However, differences have been reported[27] with the core cycle length estimates (increase in the cycle length in the range 25–30% for the LEU core compared to the HEU core, for example). Different modeling assumptions can result in significant differences between the computation results and those obtained by physical measurement. A LPCF would be used to measure key performance parameters important to the neutronic behavior of the core and to validate and verify the computational methodology. The key LEU core performance parameters of interest in a LPCF are listed and discussed below.

- Neutron flux and core power distribution measurements
- Flux trap and coolant void[1] coefficients of reactivity
- Temperature coefficients of reactivity
- Doppler[*] coefficient of reactivity[28]
- Fuel coefficients of reactivity
- LEU core cycle length
- Control rod differential and integral worths
- Shutdown margin
- Neutron lifetime and effective delayed neutron fraction determination
- Subcritical measurements for use in the development of criticality safety evaluations

[*]A report that documents the feasibility of the HFIR conversion states the Doppler reactivity coefficient and the coolant void coefficient are the primary reactivity coefficients of interest for HFIR.

3.2.1 Neutron Flux and Core Power Distribution Measurements

For the HFIR HEU core, the HFIRCE-1 a critical experiment series with uranium solutions was conducted to determine how the critical mass, power distribution, and neutron flux levels could be calculated accurately and to determine the basic characteristics of the flux trap geometry. These experiments were conducted to develop a preliminary HEU core design for the next series of critical experiments, HFIRCE-2. The solution series of experiments were conceived to design the neutron flux trap region of the HFIR HEU core. Because the proposed LEU core will resemble the current core with the exception of some significant changes to the fuel plates to a higher density U-Mo alloy fuel, the solution-type experiments are not necessary. The LPCF could be used with a HFIR LEU core mock-up to determine the neutron flux and core power distribution in a similar fashion to the HFIRCE-2 and -3 experiments conducted in the 1960s. Current calculations[13] have demonstrated that power distribution calculations agree well with the HEU HFIR critical experiment results. The primary difference between the HEU fuel and the LEU fuel is the fuel type (ceramic vs. metallic) and the enrichment, that is, a larger concentration of the ^{238}U in LEU. Further, the presence of molybdenum in the fuel could introduce uncertainties with respect to the quality of the neutron cross sections and availability of applicable benchmark critical experiments. These issues augment the need to perform critical experiments using a prototypic core to verify and validate the computation methodologies. Measurements to determine the neutron flux and core power distribution can be done in a LPCF or in the HFIR pressure vessel. Measurements performed in a LPCF would be more practical and efficient from the perspective of conducting iterative measurements. The HFIR experiments performed in the 1960s assisted with core design efforts. The low or zero power experiments were performed at the Y-12 CEF in an apparatus that was easy to access and modify as needed. For example, there was no need for personnel shielding before or after the measurements, which permitted rapid modifications to the core between measurements (e.g., placing and removing the fuel plates used for power distribution measurements). Performing critical experiments in the HFIR pressure vessel, in the water pool, is logistically difficult, takes a great deal of more time, and introduces additional costs (labor, production, safety documentation updates, etc.). Conducting critical experiments in the HFIR pressure vessel to support a HFIR LEU core design would also significantly impact current HFIR mission activities.

3.2.2 Flux Trap and Coolant Void Coefficients of Reactivity

The HFIR HEU core fuel coolant channels and the flux trap region present significant void reactivity effects. A void in the flux trap region results in a positive reactivity feedback effect, while a void region in the fuel coolant channels results in a negative reactivity feedback effect. With respect to the accident analysis in the HFIR Safety Analysis Report (SAR),[29] Chapter 15 analysis considers the upset of an optimum void in the flux trap target region because of the positive reactivity feedback effect and the power excursion that results. Current calculations[13] indicate that the LEU core flux trap and coolant void coefficients are consistent with the reporting in the HFIR SAR reactivity transient analysis. Experiments for the HFIR HEU prototypic core were conducted in the HFIRCE-2 and -3 series of critical experiments. New experiments could be performed at a LPCF in a similar fashion to the original experiments to verify and validate both the HFIR LEU core calculations[13] and the transient analyses that will have to be performed. The HFIRCE-2 and -3 series of critical experiments for determining the void coefficients of reactivity in the target region were conducted by displacing water from the center of the target region by using air-filled polystyrene tubes, Styrofoam cylinders, and air-filled aluminum tubes. Coolant void coefficients in the fuel region were determined by replacing an inner or outer fuel plate with aluminum, which is nearly transparent to neutrons, to approximate a void or steam void in the fuel. Measurements such as these could easily be done in a LPCF using a similar methodology and would be crucial because an accident scenario involving a void in the flux trap region is one of the most serious nuclear transients within a HFIR core.

3.2.3 Temperature Coefficients of Reactivity

A LPCF could be used for determining the fuel and the coolant temperature coefficients of reactivity. The Y-12 CEF steel tank configuration was used for these experiments in the HFIRCE-2 and -3 series of measurements. The water moderator was circulated through a heater and the fuel element in an independent piping system. The water that circulated through the target and control plate regions and through the beryllium could be cooled with water in a heat exchanger. In such a way, the resulting changes in reactivity associated with changes in temperature were measured via changes in the control system to maintain delayed critical configuration. The critical experiments performed for these measurements considered both the presence of the 300-gram plutonium target in the flux trap region and a flux trap region without a target. The LPCF would need the capability and flexibility to independently vary the temperature of the coolant in the inner and outer element regions of the core while cooling the other regions (flux trap, beryllium reflector and control element regions); however, this was done successfully for the HFIR HEU core without significant difficulty. There is significant value in using a LPCF to perform these measurements to support the HFIR LEU core design and to potentially perform measurements on other types of fuel that could be used to support related core conversion activities.

The fuel Doppler coefficient of reactivity is an alternate name for the fuel temperature coefficient of reactivity and is widely used in the literature. The fuel temperature coefficient of reactivity is negative as a result of the Doppler effect. This effect broadens the resonances due to the thermal motion of fuel nuclei and results in a larger energy range that neutrons can be resonantly absorbed in the fuel. A significant consequence of a HFIR core conversion from HEU fuel (>93 wt % ^{235}U) to LEU fuel (<20 wt % ^{235}U) is the large increase in the quantity of ^{238}U in the core. Because of the large resonance peaks in ^{238}U and the increase in the quantity of ^{238}U in the core, there will be a corresponding increase in resonance absorption in the core that results in a net decrease in core reactivity with increasing temperature. The effect of having a greater quantity of ^{238}U in the LEU core needs to be considered during the core design process.

A study[30] has been performed that presents how the Doppler feedback effect in light water reactors might be significantly under-predicted (~10%) with various neutron scattering models utilized in codes such as NJOY (cross-section processing) and MCNP that use asymptotic scattering kernels in the resonance range. There is a possibility that the Doppler effect has been significantly underestimated in the HFIR LEU core analyses because of the increase in ^{238}U. The Doppler effect is rather inconsequential in the HEU core because the prevalent nuclide is ^{235}U. Corrections for this issue have been developed to improve light water reactor calculations via implementation of exact scattering kernels and should be considered in the HFIR LEU core conversion efforts. A LPCF can be used to provide experimental benchmark data by heating up the inner and outer fuel elements to examine how the reactivity is affected (i.e., magnitude of the reactivity feedback from the Doppler effect).

3.2.4 Fuel and Fuel Void Coefficient of Reactivity

The HFIRCE-2 series of critical experiments included reactivity measurements involving the replacement of fuel plates with aluminum and water for the sake of determining the fuel reactivity coefficient and the fuel region void coefficient. The purpose of these experiments was to evaluate reactivity accidents related to fuel plate melting and other potential transients. The HFIR HEU core used for this series of critical experiments was manufactured with 12 removable fuel elements—six in the inner fuel assembly and six in the outer fuel assembly—for the main purpose of determining the power distribution for other experiments in this series. These experiments were useful in determining the reactivity worth of each individual fuel plate in the inner (contains boron) and outer assemblies and the effect of a void region in the fuel (aluminum plate insertion). The fuel reactivity coefficient was found to have a positive reactivity feedback effect because the fuel region of the HFIR core is generally undermoderated (i.e., removing fuel results in a localized increase in moderation and results in an increase in reactivity). This particular

experiment is best performed at zero power in a LPCF because of the need to access the core to vary the fuel plate configuration.

3.2.5 LEU Core Cycle Length

Analysis[13] has been performed to calculate the variation of the k_{eff} during irradiation and the control element location over the irradiation cycle as a function of core type (HEU and LEU). Calculation results currently conclude that the proposed LEU core will provide adequate excess reactivity to perform similarly to the HEU core. A LPCF can be used to perform experiments on control rod position as a function of soluble boron concentration in the moderator/coolant to examine core reactivity as a function of simulated irradiation time for the HFIR LEU core. This may be beneficial considering the first production HFIR HEU core had a longer cycle lifetime than expected. A LPCF may be able to better predict the core cycle length and allow for core design iterations, if necessary. According to the HFIR SAR,[29] the core cycle length depends upon the as-built core fabrication parameters, experiments and target, and the condition of the control system and reflector and can vary from 1,750 to 2,400 MWd. Using a LPCF, experiments can be performed to examine these variables that can affect the core power distribution and, consequently, the core cycle length.

3.2.6 Control Rod Differential and Integral Worths

Calculations[13] have been performed for the differential worth of the HFIR control elements. The results of these calculations show that there are differences between the control rod worth for the LEU core compared to the HEU core, mainly for during the early stages of an irradiation cycle. The report did not present specific concerns for the calculated differential worth measurements. The first two HFIR critical experiments, HFIRCE-2 and -3, considered control rod measurements related to determining the control rod position for criticality with and without the presence of a simulated target in the HFIR flux trap and for the measurement of the temperature coefficient of reactivity. These particular measurements were performed in the Y-12 CEF; however, design changes to the coolant channels in the control rod region of the HFIR core resulted in the desire to perform control rod verification measurements in both the Y-12 CEF and the HFIR pressure vessel. The calculations and experiments demonstrate that having a LPCF in close proximity to the HFIR facility could be beneficial to accommodate design modifications as they occur for the unique aspects of an LEU HFIR core.

3.2.7 Shutdown Margin

The HFIR SAR discusses the design basis refueling shutdown margin of $10.4 below delayed critical that is ensured by fuel manufacturing and inspection controls and is also sufficient to bound very unlikely accident sequences, such as a void in the central flux trap or the absence of burnable poison in the unirradiated fuel elements. Previous reports[13] have calculated the design basis refueling shutdown margin for the HFIR LEU core as approximately $9 subcritical. Shutdown margin experiments[31] were performed for the HFIR HEU core in the HFIRCE-3 series of experiments to quantify the shutdown margin under accident conditions. According to a summary of the HFIRCE-3 experimental series performed for some 1967 accident analysis,[18] the physics parameters, in this case shutdown margin, can be affected by core design changes made as a result of the critical experiments performed at low or zero power. Some of the experiments for HFIRCE-3 that were performed in the HFIR facility and compared to the critical experiment results at the Y-12 CEF showed a smaller shutdown margin than predicted by the Y-12 CEF critical experiments, mainly due to the a difference in water content in the control element region of the core. The critical experiments performed were crucial in making changes to the core design, and the close proximity of the Y-12 CEF to the HFIR facility made this iterative process much more efficient. It should be noted that this accident analysis report also includes information about measurements for calculating shutdown margin for the first two HFIR production cores (one fabricated by ORNL and the other by a

vendor). These were installed in the HFIR facility where shutdown measurements were performed, but the measurements could have been done at the Y-12 CEF just as easily. Further, the first ~300 production HFIR HEU cores were taken to the Y-12 CEF to verify key parameters, including shutdown margin, before being installed at HFIR to verify the manufacturing process. Having a CEF in close proximity to the HFIR facility made the initial core testing much more efficient than if the core had to be shipped to another site for testing.

3.2.8 Neutron Lifetime and Effective Delayed Neutron Fraction Determination

It will be necessary to determine a prompt neutron lifetime and effective delayed neutron fraction for the proposed LEU core for use in the nuclear transient analysis to support the development of the SAR upgrades. Calculations to determine the delayed neutron fraction have already been done for the LEU core and compare well to the calculated[32] value for the HFIR HEU core, 0.00756 and 0.00760, respectively. The prompt neutron lifetime has yet to be calculated for the LEU core.[13] Although not much change is expected in these parameters, the proposed LPCF would be very useful to enable the measurement of these parameters to support the necessary transient analysis. The HFIRCE-2 experimental series included the pulsed-neutron experiments to determine these parameters.[3] The HFIRCE-3 series included differential control element worth measurements at the HFIR facility to verify previous neutron lifetime and delayed neutron fraction measurements.[33]

3.2.9 Critical and Subcritical Measurements for Use in the Development of Criticality Safety Evaluations

Critical experiments were performed at HFIR for early pre- and post-startup activities to determine the reactivity of the first HEU HFIR production cores under a variety of conditions (e.g., bare core, separated inner and outer fuel elements {interaction measurements} and submerged core). These measurements are invaluable for use in nuclear criticality safety evaluations (NCSEs) that document the normal and credible abnormal conditions associated with the storage and handling of fresh and spent elements during critical/subcritical experiments or HFIR operations. Figure 5 illustrates a few of the experimental configurations at the Y-12 CEF that were used for this purpose[19] in the late 1960s. A LPCF would be invaluable for providing subcritical and critical measurement results to verify and validate computational methodologies in use for reactor physics and nuclear criticality safety evaluations. This is especially valuable for the proposed LEU core because of an increased quantity of ^{238}U, a significant resonance absorber, and of molybdenum, whose cross sections could have significant uncertainties. Based on a review of the *International Handbook of Evaluated Criticality Safety Benchmark Experiment*s (IHECSBE),[34] there are not many directly applicable evaluated critical experiment benchmarks available to ensure that we understand the bias and uncertainties to an acceptable degree. Section 3.3 discusses the use of sensitivity and uncertainty (S/U) methods that could identity applicable benchmarks for use in validation efforts to support NCSE development. Furthermore, the critical and subcritical data can be used directly to support the analysis and to ensure credible abnormal conditions remain subcritical.

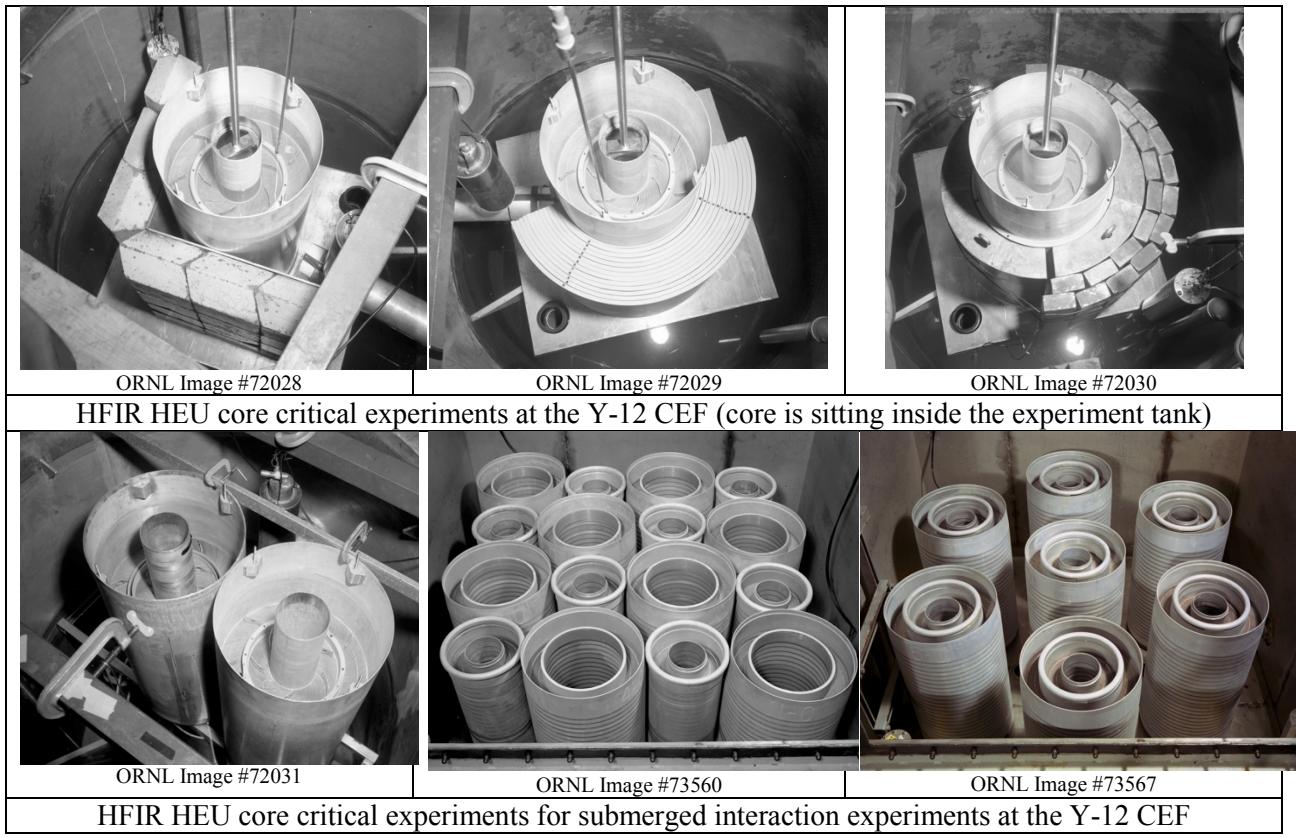

Fig. 5. Examples of experiments performed for criticality safety purposes (HFIRCE-2 and 3) at Y-12 CEF with the HFIR HEU core. *Source*: ORNL Photograph/Image Database.

3.3 THE USE OF SENSITIVITY AND UNCERTAINTY METHODS TO ASSIST WITH VALIDATION EFFORTS

A KENO-VI model of an LEU HFIR core was developed for this report to perform preliminary S/U analyses and to calculate the system effective multiplication factor, k_{eff}. KENO-VI, a functional module in the SCALE code system, is a Monte Carlo criticality program used to calculate the k_{eff} of three-dimensional systems.[35] Over a period of years, various HFIR core models (a MCNP HFIR HEU model,[22] a MCNP HFIR LEU model,[13] and a KENO-VI HEU model[36]) have been developed; however, a KENO-VI LEU HFIR core model did not previously exist that could be used for an S/U analysis using the TSUNAMI-3D[37] module of SCALE. TSUNAMI-3D provides for automated processing of material input, processing of cross-section data, calculation of cell-weighted cross-section data, calculation of forward and adjoint neutron transport solutions, calculation of sensitivity coefficients, and the calculation of the uncertainty in k_{eff} due to cross-section-covariance data.[37] The modeling assumptions for the LEU core model are the same as the previous models, including the homogenized core[13] assumption, except for the use of multi-group cross sections that include the resonance self-shielding treatment. A TSUNAMI-3D calculation using 238-group ENDF/B-VII cross sections was attempted but would not execute as a single case due to computer memory limitations. Consequently, a new, simplified model was then created that could execute within the machine limitations. The results of these S/U calculations with the simplified model will be published in a subsequent report.

The S/U analysis determines those nuclide cross sections, indicated by large k_{eff} uncertainties, that are most likely to result in biases affecting the calculated system k_{eff}. In addition, the S/U analysis techniques

may identify applicable benchmark critical experiments for use with HFIR LEU core validation efforts and in the design of critical experiments that could be performed in a LPCF. HFIR LEU critical experiments in a LPCF would be used to validate the HFIR LEU core conversion computational methodologies and provide directly applicable benchmark critical experiments for validation purposes. In addition, the LPCF can be used to support other core conversion and core design efforts. These activities could result in additional customer base to support the LPCF facility.

4. LOW-POWER CRITICAL FACILITY CONFIGURATION

4.1 SAFETY ANALYSIS REPORT AND TECHNICAL SAFETY REQUIREMENTS FOR THE LOW-POWER CRITICAL FACILITY

The HFIR SAR (Chapter 9) does mention the presence of the critical pool in the HFIR facility, but because the pool has never been used as a critical facility, no safety basis was prepared. As part of design of the LPCF, a new facility safety basis including hazards analysis would need to be performed for the LPCF, which would include analyses of both public and worker exposure to credible scenarios, which could affect the HFIR Technical Safety Requirements (TSRs).

DOE *Implementation Guide for Use in Developing Documented Safety Analyses to Meet Subpart B of 10 CFR 830*, DOE G 421.1-2A,[38] states that most large DOE reactors use Nuclear Regulatory Commission (NRC) Regulatory Guide (RG) 1.70.[39] The HFIR SAR was prepared, to the extent applicable, to meet the format and content requirements of RG 1.70. However, because the LPCF will not be a large reactor and will not have many of the same systems or hazards, RG 1.70 would not be an appropriate guide for its safety basis. DOE G 421.1-2A also states that ANSI/ANS-15.21[40] provides guidance for small research reactors, and NUREG-1537[41] also provides guidance for non-power reactors. DOE G 421.1-2A notes that these NRC guides do not address certain topics that should be included for DOE facilities as described in DOE-STD-3009.[42] Before the LPCF project is authorized for detailed design, ORNL will propose its safety basis framework to the DOE Office of Science for concurrence. That framework will probably include the appropriate elements of ANSI/ANS-15.21 that are supplemented by DOE-STD-3009. The safety basis framework for the ATR-C facility[*] will also be considered as an example of such a blended approach. It should be noted that ORNL has experience with developing and securing approval for the safety basis for the HFIR Cold Neutron Source that consists of a separate Documented Safety Analysis (DSA) that is a companion to the HFIR SAR and a few TSRs that are merged into the single set of HFIR TSRs. It is likely that the LPCF safety basis approach would be similar.

Additionally, the HFIR nuclear criticality safety program would need to be engaged to provide the technical bases for the safe transportation, handling, and storage of the new LEU HFIR cores alongside the HEU cores to ensure that fissionable material outside the reactor and critical experiments will remain subcritical under all normal and credible abnormal conditions at the HFIR and LPCF. ANSI/ANS-8 series standards, in particular ANSI/ANS-8.1,[43] are applicable, as is DOE-STD-3007,[44] for generating the Nuclear Criticality Safety Evaluations. Operations that are under these standards for the LPCF will include core storage and handling operations into and out of the experiment configurations. Once the experiment configurations are assembled and the critical experiments begin, the ANSI/ANS-8 series standards no longer apply. The ANSI/ANS-1,[45] Conduct of Critical Experiments, standard would then become applicable for these operations.

[*]The ATR-C is a critical facility to support the Advanced Test Reactor (ATR) at the Idaho National Laboratory. The critical facility (ATR-C) consists of a functional mock-up of the ATR core to support ATR operations. This facility is discussed further in Section 5.1.3.

4.2 PROPOSED CRITICAL POOL CONFIGURATION

4.2.1 Critical Pool Design Modifications

Various proposals[1,2,17] for the HFIR LPCF have discussed designing the LPCF with capabilities to support multiple missions. For early testing of an HFIR LEU lead test core, the core, control and safety elements, and neutron reflector are expected to be either submerged in the LPCF or arranged in a tank (Fig. 6) that can accommodate the core configuration. The experiment and data collection activities will be controlled from a dedicated control room. The tank configuration is similar conceptually to the first three HFIR critical experiment series (HFIRCE-1 to 3) discussed previously. Following initial HFIR LEU testing, the critical facility can be reconfigured as required to test the first several production cores to ensure safety and performance.

Design modifications for the critical pool include the following upgrades and activities[1,17] (one proposed configuration is illustrated in Fig. 6):

- initial pool cleanout;
- relocation of components in the high bay area next to the critical pool that are being used currently for other purposes;
- design, component procurement, and fabrication;
- facility and control room installation; and
- safety analysis, criticality safety evaluations, readiness reviews, testing and training.

Many of the capabilities needed for a LPCF already exist because the facility was designed for low-power critical experiments. For example, the critical pool can be modified with a removable grid plate installed on a seismically qualified support frame to accommodate different experimental configurations similar to the HFIRCE-1, 2, and 3 experimental series. The pool water supply can be demineralized and supplied to experimental tank(s) with the capability for level control adjustments. Figure 6 illustrates a lower pool level to accommodate an experimental tank for HFIR core experiments. The pool temperature can be controlled via an in-line pool heater, and soluble boron could be introduced to the pool water as needed to approximate fuel burnup effects for HFIR core testing. However, operations would need to implement careful measures to ensure boron from the LPCF does not contaminate the reactor clean pool water or make its way into the HFIR primary coolant system. Further, the use of soluble boron in HFIR core testing experiments could reduce the flexibility of the LPCF to perform other experiments.

Capabilities also could be provided for instrumentation and control features to ensure criticality safety and to measure the desired testing parameters. Of course, personnel access is provided to the facility as required to support the experiments as needed. Personnel access to the LPCF during HFIR operations and HFIR critical pool work during LPCF operation will also be a key HFIR-LPCF SAR interface issue. This configuration is similar to the Reactor Critical Facility (RCF) at the Rensselaer Polytechnic Institute.[*] To reduce worker exposure and to enhance flexibility for moving cores between the HFIR pressure vessel and the critical pool, the LPCF will have the capability to transfer items through a separation gate between the critical pool and the spent fuel pool area. A modern, shielded control room[†] can also be provided to accommodate the LPCF operations to enable the facility to operate the control rods independently with a control plate/cylinder drive mechanism. This will allow a time-varying adjustment of control rod position as needed.

---

[*]This facility is discussed further in Section 5.1.4.

[†]The LPCF will probably require a new control room to be constructed and will be located near the critical pool. These details are preliminary and nature. The HFIR control room is not likely to be changed.

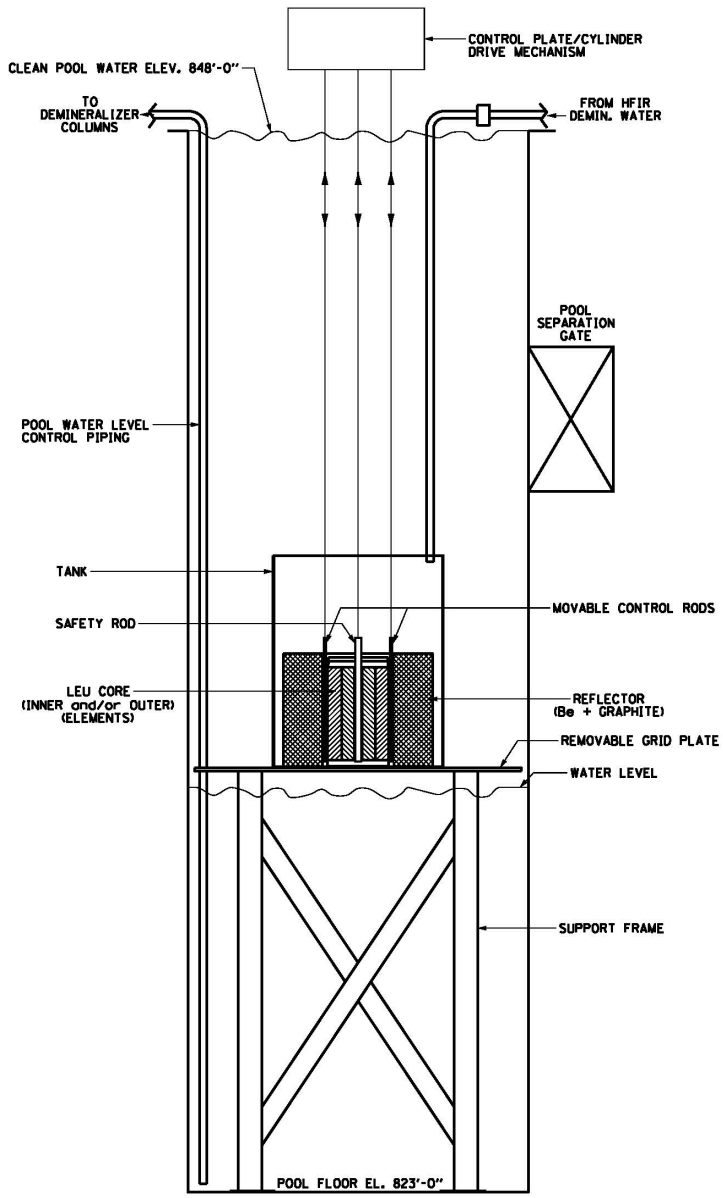

Fig. 6. One possible configuration of the LPCF in the critical pool. ***Source*****: Ref. 1.**

5. ALTERNATIVE CRITICAL FACILITIES

There are various facilities in the United States and abroad that could potentially perform HFIR LEU core testing to support core conversion activities. Some of these facilities are discussed below. Most of these facilities are dedicated to certain types of critical experiments and are not very similar to the activities at HFIR. The NNSA sites include Sandia National Laboratories (SNL) critical experiment facility at Technical Area V and the National Nuclear Critical Experiment Research Center (NCERC) at the Device Assembly Facility (DAF) located at the National Nuclear Security Site (NNSS). Other sites that have capabilities similar to what is proposed for the LPCF include the Advanced Test Reactor at the Idaho National Laboratory (DOE facility) and the Rensselaer Polytechnic Institute's critical experiments facility (RCE). A few facilities exist abroad that could conceivably perform critical experiments for a HFIR LEU

core are discussed below. Performing HFIR LEU core reactivity measurements at these facilities will involve transporting the core to and from ORNL and will involve the generation nuclear criticality safety evaluations for the storing, handling, and preparing the reactivity measurements. These activities will require significant amounts of funding, time, and labor.

5.1 DOMESTIC FACILITIES

5.1.1 Los Alamos National Laboratory (LANL) NCERC Facility

The NCERC[46] facility is a LANL-operated facility located at the DAF at the NNSS. This facility can perform a variety of critical experiments with solid fissile materials and moderators. There are currently no solution-type critical assemblies operational at NCERC. The Planet, Flattop, Godiva-IV, and Comet assemblies are currently operational and are used for defense and homeland security work in addition to nuclear data measurements and hands-on Nuclear Criticality Safety training purposes as part of the United States DOE Nuclear Criticality Safety Program (NCSP) Hand-On Training Course.[47] HFIR-related critical experiment work at NCERC would be difficult because there are currently a limited number of spaces where a tank of sufficient size (similar to the HFIRCE-2 and -3 experiments) could be installed with sufficient quantities of demineralized water to perform the measurements. The current assemblies at DAF are housed wherever space could be found in the facility, and each assembly currently shares a room with another critical assembly. There is an advantage at LANL with respect to the availability of a control room, instruments, and neutron detectors to perform the measurements. A disadvantage is that the DAF safety basis documentation would need to be upgraded to reflect the characteristics and hazards associated with a series of HFIR LEU experiments. Although LANL "leases" the DAF spaces for their NCERC operations, there is a disadvantage with respect to safety basis development because LANL does not own the safety basis for DAF. Additional efforts and cost will be necessary to generate NCS evaluations for the storage and handling of the cores at the DAF to support preparations for the reactivity measurements.

5.1.2 SNL Critical Experiment Facility (CEF)

Critical experiments are conducted at Technical Area V at SNL with arrays of low-enriched water-moderated fuel rods. Specifically, the Burnup Credit Critical Experiment (BUCCX)[48] and Seven Percent Critical Experiment[49] (7uPCX) were designed to allow for the generation of benchmark-quality criticality and reactor physics data for water-moderated pin-fueled nuclear reactor cores. The BUCCX experiments provided data for $U(4.31)O_2$ fuel rod arrays with ^{103}Rh foils used to simulate the fission product rhodium. The 7UPCX experiments provided data for UO_2 fuel rod arrays with an enrichment of 6.9 wt % ^{235}U (current enrichment of PWR fuel is less than 5 wt % ^{235}U). To support HFIR experiments, either a new tank would need to be installed or the existing tank would need to be reconfigured to remove the current fuel rod experiment from the core and new capabilities be installed to allow for control rod experiments with the HFIR LEU core with the permanent beryllium reflector present. A significant advantage of this facility is the active control room, instruments, and neutron detectors to perform the measurements.

5.1.3 Advanced Test Reactor Critical Experiment Facility

The Advanced Test Reactor (ATR) facility[50] at the Idaho National Laboratory (INL) currently has an experimental critical experiment facility (ATR-C) that is limited to up to 5 kW operations. The ATR-C facility currently has a mock-up of the ATR core that is used to conduct reactivity measurements related to experiments that could be introduced to the core. A teleconference with INL staff was conducted in August 2012 to discuss, in part, their ATR-C facility. They mentioned during the teleconference that the facility is dedicated to ATR experiments only. They currently do not support other experiments or reconfigure their ATR mockup for the sake of performing other critical experiments. Based on this information, utilizing the ATR for full-up HFIR LEU core measurements will not be possible.

5.1.4 Rensselaer Polytechnic Institute (RPI) Reactor Critical Facility (RCF)

The RCF,[51], a.k.a., Walthousen Critical Experiments Facility, is a facility similar in capability to the SNL CEF with respect to the types of critical experiments that are performed. The reactor assembly consists of a support structure for the fuel core lattice and the control rod assembly. The fuel in the core nominally consists of 332 stainless steel-clad SPERT F-1 fuel pins that contain 4.81 wt % ^{235}U enriched UO_2 pellets. With respect to the RPI NRC license, the power limit is 100 W, but the reactor is operated with an administrative limit of 15 W. There is a large reactor tank that is open for easy access for inserting or removing experiments and rearranging fuel. This facility has the unique capability for students and customers to view the experiment operations via the Internet as well. It is possible that the facility could be reconfigured to allow for a LEU HFIR core, control elements, and reflector assembly to be placed into the reactor tank for subcritical and critical measurements to be performed. However, according to the RCF operations supervisor,[52] the HFIR LEU core experiments would require nearly a complete rewrite of their existing SAR and a significant portion of their technical specifications in addition to their site license for radioactive material and a significant modification to their operating license with the NRC. In addition, the modifications also involve the development of a suite of nuclear criticality safety evaluations to ensure safety for storage, unloading/loading, and handling operations. The RCF facility would require similar modifications physically and administratively as the proposed LPCF at HFIR to conduct the needed experiments. They would consider supporting critical experiments to support the core conversion, if needed.

5.2 INTERNATIONAL FACILITIES

5.2.1 Chalk River Critical Experiment Facility

The Chalk River Laboratories is a Canadian nuclear research center located near the Chalk River in the province of Ontario. It has operated a variety of reactors and critical assemblies since 1945, including the Zero Energy Deuterium (ZED-2) reactor and the National Research Universal (NRU) reactor. These reactors are discussed below.

5.2.1.1 ZED-2 200 W Reactor

The ZED-2 (Zero Energy Deuterium) reactor[53] located at Chalk River Laboratories is a versatile zero-power (less than 200 watts) heavy-water moderated critical facility that can be used for a variety of experiments. It has been operated at Chalk River since 1960. It is currently used for reactor physics measurements involving different fuel and coolant types over ranges of lattice pitches. It has the capability to perform control rod worth measurements with mock-ups of control elements and fuel channels for power and research reactors as well. The reactor is located in a tank 3.36 m in diameter and is 3.35 m high. There are seven zirconium-alloy fuel assemblies that make up the heavy-water-moderated core. Other moderator/coolants (e.g., light water or CO_2 gas) can be used. The core is reflected with a thick graphite reflector. This particular reactor could, potentially, be reconfigured to perform a suite of low-power critical experiments with the HFIR LEU core. ZED-2 personnel contacted to date,[54] have mentioned that recent ZED-2 upgrades will assist this experiment facility in becoming a User Facility with open-ended capability.

5.2.2 PROTEUS Critical Experiment Facility

This zero power critical experiment facility is part of the Paul Scherrer Institut (PSI) in Switzerland. Its current mission is to perform critical experiments for graphite-moderated LEU high-temperature reactor configurations, that is, pebble-bed-type fuel. An International Atomic Energy Agency (IAEA) report[55] discusses the HTR-PROTEUS facility in detail. It is currently configured for pebble bed reactor fuel with

a thick graphite reflector in addition to the control and shutdown rods. This facility was designed for high-temperature reactor applications. According to the PSI institute website (http://proteus.web.psi.ch), the PROTEUS critical experiment facility has been shut down.

5.2.3 Japan Atomic Energy Agency Reactor Critical Facilities

The Japan Atomic Energy Agency regulates the Nuclear Fuel Cycle Safety Engineering Research Facility (NUCEF) in Japan. There are two critical experimental facilities at NUCEF,[56] Static Experiment Critical Facility (STACY) and Transient Experiment Critical Facility (TRACY), designed to conduct subcritical and transient experiments, respectively, used to support fuel cycle needs. The STACY facility is dedicated to subcritical measurements involving low-enriched uranium and plutonium nitrate solutions in homogeneous and heterogeneous arrangements. This facility can perform critical mass measurements (e.g., solution fuel composition, critical height) for the purposes of providing criticality benchmark data, measuring reactivity coefficients, providing basic data for criticality accident evaluation, and developing subcriticality monitoring techniques. The TRACY facility is a low-enriched uranyl nitrate solution reactor dedicated to measurements for the accumulation of data on transient behavior at criticality accident conditions. These facilities are currently dedicated to solution operations with LEU fuel (uranium and plutonium nitrate solutions). It would be difficult to reconfigure the mission of either of these facilities to support HFIR LEU core conversion activities, and the use of a LPCF ORNL would be better suited for this task.

5.2.4 Criticality Safety Laboratory at Valduc, France

There are several critical experiment facilities[57] at the Criticality Safety Laboratory at Valduc, France, Apparatus B, Silene, and Caliban. A critical experiment machine known as Maracus was used at the Valduc laboratory and consisted of a split-table machine for the assembly of fissile materials. This machine has been shut down since 1986.

5.2.4.1 Apparatus B

The Apparatus B subcritical facility can support a large variety of criticality experiments to represent fabrication, storage, transport, and reprocessing of fissile materials with or without the presence of a moderator, or neutron absorbers (boron, gadolinium, fission products, etc.), reflectors or shields (lead, concrete, polyethylene, etc.). The Apparatus B facility includes an experimental tank and the associated instrumentation. The experimental tank can contain wide variety of fissile core types, typically a lattice of low-enriched uranium oxide or MOX fuel rods, which can be immersed in a variety of moderators. The moderator can consist of fissile or non-fissile solutions or water. The types of fuel that can be added to the experimental tank are PWR-type fuel rods and uranium (depleted and high enriched) and plutonium (up to 20 wt % ^{240}Pu) nitrate solutions. It is possible that facility could perform subcritical and delayed critical measurements on a prototypic HFIR LEU core. The logistics involved with performing experiments at this facility would be difficult considering the location of the facility. Further inquiries could be made to determine if the facility could take the time to perform these measurements. It is still much more practical from a reactor design perspective to perform these measurements as close to the HFIR facility as possible to make design modifications to the core more efficient. The DOE NCSP has initiated an experimental program with the Institut De Radioprotection et De Sûreté Nucléaire at Valduc determining integral reactivity characteristics of various structural materials on the Apparatus B facility.[58]

5.2.4.2 Silene and Caliban

The Silene critical assembly is designed to study criticality accidents and their consequences. The assembly was designed in 1974 and can reproduce criticality excursions with reactivity insertions ranging

up to $7.[57] The experimental core is composed on an annular region that contains highly enriched uranyl nitrate solution with a uranium concentration of about 70 g/L. The core is located in a large concrete irradiation cell to allow room for the placement of experiments and instrumentation around the core. This core can be operated in pulse mode, steady state mode or free-evolution mode. Silene is currently shut down.

The Caliban critical assembly is an essentially unreflected and unmoderated assembly of uranium-molybdenum metal.[57] The core consists of more than 113 kg of highly enriched uranium metal alloyed with 10 wt % molybdenum and is similar in design to the Godiva IV and SPR-II critical assemblies in the United States.

The Silene and Caliban critical assemblies could not easily be used to support the HFIR LEU core critical experiments without significant facility and instrumentation modifications.

5.2.5 Russian Critical Experiment Facilities

There are three critical experiment Russian institutes under the auspices of the Russian Federation Ministry of Atomic Energy: the State Scientific Centre of Russian Federation Institute of Physics and Power Engineering (IPPE),[59] the Russian Federal Nuclear Center All Russian Scientific Research Institute of Experimental Physics (VNIIEF),[60] and the Russian Federation Nuclear Center Institute of Technical Physics (VNIITF).[61] IPPE performs critical experiments, typically with uranium compounds and solutions, that require large quantities of fissile solutions in a variety of experimental vessels (cylindrical, spherical, conical, rectangular, etc.) either individually or in array configurations. The IPPE facilities appear to perform research on large uranium systems, and it is conceivable that experiments could be performed with fissile units similar to a HFIR LEU core. The other institutes, VNIIEF and VNIITF, have critical experiment facilities that utilize a variety of critical assemblies. These assemblies are typically metal fissile systems that can accommodate various bare and reflected configurations and do not appear to be suited for experiments with fissile systems similar to a HFIR LEU core. In any case, because of the large distance between ORNL and these facilities, it is not practical to consider the Russian facilities for HFIR LEU core design critical experiments.

6. OTHER USES FOR A LOW-POWER CRITICAL FACILITY

A LPCF was designed at the HFIR facility to support criticality experiments to support the design and operation of a HFIR HEU core in the 1960s; however, because of the proximity, capability, and availability of the Y-12 critical experiment facility, the LPCF was never used for its intended purpose. In addition to supporting HFIR operations and LEU core conversion activities, a facility such as this can be used for a variety of customers and experiments. Facility upgrades should consider supporting a suite of generic critical experiments for many customers. A LPCF with a generic capability, much like the LANL NCERC, can support many other customers within and outside of the DOE complex.

6.1 REACTOR FUEL DESIGN SUPPORT ACTIVITIES

As previously discussed, the HFIR facility is not the only research reactor in the United States that is undergoing LEU core conversion activities. In addition to HFIR, the MIT reactor (MITR-II), the National Institute Standards and Technology (NIST), and the Missouri University Research Reactor (MURR) are also pursuing LEU core conversion activities. These facilities are relying heavily on computational techniques to assist with design efforts. To support validation and verification of the computational techniques, some facilities, such as the ATR,[50] are relying on small-scale (single fuel plates or assemblies) HEU fuel replacements with LEU fuel. Large-scale subcritical and critical experiments to support other HEU-to-LEU core conversion efforts could be performed at a LPCF. These experiments would be similar

to the HFIR critical experiments in the 1960s where individual HFIR fuel assemblies and assembled core mockups were used for reactivity measurements to support core design and nuclear criticality safety analysis. In addition, the reactivity of each fuel element (inner and outer) for the HFIR core, moderated and reflected by water, was determined prior to its use in the HFIR facility to provide a measure of conformity in the fuel element manufacturing process to the core design specifications, specifically with the ^{235}U and burnable poison content of the core. Similar activities could be performed for other facilities as needed.

The ATR has a similar capability as the HFIR facility; however, the ATR facility has a mockup of the core installed in the ATR-C water pool. The ATR-C has the ability to test the reactivity effect of experiments or core modifications in their experimental mock-up in their critical experiment facility. The critical pool was installed in the HFIR facility for the same purpose; however, it was never put into operation. A LPCF can be used to examine core reactivity impacts for experimental packages or core modifications, such as the Cold Neutron Source, to provide data concerning experiment and core design changes and to provide data for hazards analysis in safety basis documentation.

6.2 USING A LPCF FOR TRAINING PURPOSES

Operator, engineer, and manager criticality safety training can be provided in a LPCF to teach the fundamentals of criticality physics, criticality accidents, critical experiment design and execution, hands-on subcritical and critical experiments, experimental data analysis, and critical experiment benchmarking. A LPCF that is very generic in design can be used for a variety of training needs. With a HFIR mockup in the LPCF, reactor operator training could be conducted periodically. This would allow training to be conducted even between HFIR operating cycles. Further, there is a growing need for hands-on nuclear criticality safety training at DOE and NRC-regulated facilities and for university students studying nuclear engineering. Classroom nuclear criticality safety training is already offered at various locations [e.g., University of New Mexico, University of Tennessee, LANL (for the DOE Training and Education Project managed by the DOE Nuclear Criticality Safety Project)], but hands-on training is only offered at two DOE laboratories, SNL and LANL. SNL offers hands-on criticality safety training for uncleared and L-cleared students, while the LANL NCERC facility is used for those with Q-clearances (see Section 5 for a description of the facilities). A LPCF at ORNL would create additional hands-on training capability for those facilities and universities nearby (e.g., the Y-12 National Security Complex, the ORNL, the Paducah Gaseous Diffusion Plant, the B&W facility at Lynchburg, VA, Nuclear Fuel Services, a variety of Nuclear Fuel Fabrication Facilities, University of Tennessee, Georgia Institute of Technology, University of South Carolina, and North Carolina State University) in the eastern United States.

6.2.1 Proposal for a Nuclear Criticality Safety Training Center at ORNL

Proposals[62,63] have discussed a critical experiment facility that is generic in nature and could accommodate a nuclear criticality safety training center that would be operated by ORNL and funded by the DOE. The critical facility location was proposed to be in Building 7930[*] on the HFIR campus and was to be used for conducting essentially zero power optimally light water reactor–moderated, absolutely sub-prompt critical, latticed, very low-enriched uranium experiments for a variety of purposes, including training, demonstration, and measurement of sub-, delayed-, and super-critical lattice configurations. The proposed experiments could be conducted to demonstrate the effects relative to the following: number of fuel rods, lattice spacing, water level, water temperature, and reflector materials (e.g., light water,

[*]Building 7930 at ORNL was proposed for the installation of a tank for NCS engineer training purposes because the HFIR critical pool would make training more difficult because of the water in the pool and access if a tank were to be installed at the bottom of the pool. The proposals[62,63] discussed in this section were to show that a LPCF could contain more critical assembly locations than simply the critical pool to increase the facility flexibility.

graphite, steel, polyethylene, aluminum, intervening neutron absorbing materials such as cadmium, boron, etc.) and would be invaluable from a nuclear criticality safety training perspective. The proposals also included a design for a large steel tank in which to perform the experimental measurements. This proposed critical assembly tank is very similar in design to the HFIR experimental setup at the Y-12 CEF up to the fourth HFIR critical experimental series in the HFIR pressure vessel. If designed carefully and generically, a variety of customers could be sought for the use of a LPCF facility at ORNL.

There are significant benefits for building the LPCF in the HFIR critical pool.[1,17] The HFIR facility is already a Hazard Category 1 nuclear facility under DOE regulation. Modifications to facilities such as these require safety basis enhancements, but significant controls already exist to protect the public and the workers. Thus, there is much less work required for supplementing the current HFIR safety basis documentation than to create a new or significantly upgraded safety basis for a new or significantly upgraded facility. With respect to staff, the HFIR team is very experienced in nuclear facility operations (e.g., reactor design, safety, maintenance, radiation protection, security and waste management). Further, the HFIR facility has an established neutron activation laboratory and staff. The ORNL has broad scientific and technical expertise with support functions for a LPCF in areas such as instrumentation and control, code development, and nuclear data management. ORNL also has corporate and academic partners that could be utilized to support this facility.[17]

6.3 CONDUCTING BENCHMARK-QUALITY EXPERIMENTS AT A LPCF

Typically, the NNSA, via the DOE Nuclear Criticality Safety Program, funds various experimental campaigns per year to address requests for critical experiments for homeland security or safety purposes (e.g., requests for experiments to support criticality safety evaluation development). The LPCF facility would supplement existing critical experiment capabilities at SNL and LANL NCERC and, if designed with a broad mission (i.e., capability to perform experiments over a wide range of neutron energies and using fissionable material in a variety of forms), a LPCF at ORNL could significantly augment the critical experiment capabilities of the United States. For example, benchmark critical experiments can be conducted here with a variety of fissile materials where current benchmark-quality criticality safety experiments are lacking. For example, there are needs for the following types of integral critical experiments:

- zero-power experiments for fissile and fissionable materials at high and very low temperatures to explore how the critical mass is affected;
- intermediate spectrum critical and subcritical experiments;
- criticality properties of many actinides to verify critical mass estimates;
- criticality properties for lattices of fuel rods containing uranium, plutonium, and fission products in proportions simulating commercial spent nuclear fuel;
- benchmark critical experiments for fissile systems that contain structural material diluents; and
- benchmark critical experiments for LEU fuel containing molybdenum and burnable poisons, such as boron and gadolinium.

Benchmark-quality critical experiments are used to verify and validate computational methodologies used for reactor design or work with fissionable materials worldwide.

7. CONCLUSION

A LPCF has been proposed at the HFIR facility to support LEU conversion activities in addition to a wide variety of other activities such as operator and nuclear criticality safety training and performing benchmark-quality critical experiments. At a minimum, a LPCF would be used to verify and validate

extensive computational analyses that have been used to determine if the safety and scientific performance of HFIR can be maintained after the core conversion is complete. The use of a critical experiment facility to conduct prototypic HFIR HEU core reactivity measurements was crucial to support the HFIR design in the 1960s. Even with better computational tools and nuclear data, there are still uncertainties in the computational methods that need to be determined and considered in the core design process.

8. REFERENCES

1. R. A. Crone, "Proposed HFIR Low Power Critical Facility," presentation to John Stevens, Oak Ridge National Laboratory, Oak Ridge, TN (2012).
2. C. M. Hopper, "DOE/Oak Ridge National Laboratory Center of Nuclear Criticality Safety Excellence/Training," draft proposal, Oak Ridge National Laboratory, Oak Ridge, TN (2006).
3. R. D. Cheverton and T. M. Sims, *HFIR Core Nuclear Design*, ORNL-4621, Oak Ridge National Laboratory, Oak Ridge, TN (1971).
4. C. A. Burchsted, *High Flux Isotope Reactor Critical Experiment – Equipment*, Report of HFIR Critical Experiment 1, ORNL-CF-60-4-120, Oak Ridge National Laboratory, Oak Ridge, TN (1960).
5. P. R. Kasten, *HFIR Critical Experiment-2 (HFCE-2)*, ORNL-CF-60-8-145, Oak Ridge National Laboratory, Oak Ridge, TN (1960).
6. P. R. Kasten and R. D. Cheverton, *Revised Version of HFIR Critical Experiment-2 (HFIR-2)*, ORNL-CF-61-1-42, Oak Ridge National Laboratory, Oak Ridge, TN (1961).
7. D. W. Magnuson, *The U-235 Content of Foils Punched from HFIR Critical Experiment No. 2 Fuel Plates*, ORNL-CF-61-7-50, Oak Ridge National Laboratory, Oak Ridge, TN (1961).
8. D. W. Magnuson, *High Flux Isotope Reactor Critical Experiment No. 2*, ORNL-CF-61-9-52, Oak Ridge National Laboratory, Oak Ridge, TN (1961).
9. D. W. Magnuson, *High Flux Isotope Reactor Critical Experiment No. 2 Part II*, ORNL-CF-62-1-63, Oak Ridge National Laboratory, Oak Ridge, TN (1962).
10. D. W. Magnuson, *High Flux Isotope Reactor Critical Experiment No. 2 Part III Reactivity Measurements in HFIRCE No. 2*, ORNL-CF-62-1-53, Oak Ridge National Laboratory, Oak Ridge, TN (1962).
11. D. W. Magnuson, *High Flux Isotope Reactor Critical Experiment No. 2 Part IV – Outer Control Plate Sensitivity Values*, ORNL-CF-62-5-20, Oak Ridge National Laboratory, Oak Ridge, TN (1962).
12. D. W. Magnuson, *High Flux Isotope Reactor Critical Experiment No. 2 Part V – Reactivity Measurements with Modified Control Plates*, ORNL-CF-62-5-10, Oak Ridge National Laboratory, Oak Ridge, TN (1962).
13. G. Ilas and R. T. Primm III, *Low Enriched Uranium Fuel Design with Two-Dimensional Grading for the High Flux Isotope Reactor,* ORNL/TM-2010/318, Oak Ridge National Laboratory, Oak Ridge, TN, April 2011.
14. R. T. Primm III, R. J. Ellis, J. C. Gehin, D. L. Moses, J. L. Binder, and N. Xoubi, "Assumptions and Criteria for Performing a Feasibility Study of the Conversion of the High Flux Isotope Reactor Core to Use Low-enriched Uranium Fuel," *Proceedings of PHYSOR 2006*, Vancouver, Canada (2006).
15 D. Chandler, R. T. Primm, and G. I. Maldonado, *Validating MCNP for LEU Fuel Design Via Power Distributions Comparisons,* ORNL/TM-2008/126, Oak Ridge National Laboratory, Oak Ridge, TN, November 2008.
16. E. C. Woolstenhulme, R. G. Damiana, K. A. Schreck, and A. M. Phillips, *Neutron Radiography Reactor Reactivity- Focused Lessons Learned*, Idaho National Laboratory, Idaho Falls, ID, November 2010.

17. D. G. Renfro, D. L. Pinkston, R. B. Rothrock, K. A. Smith, R. A. Crone et al., "Proposal for HFIR Low-Power Critical Facility to Support LEU Fuel Conversion," Revision 1, Oak Ridge National Laboratory, Oak Ridge, TN (2012).
18. F. T. Binford, T. E. Cole, and E. N. Cramer, *The High Flux Isotope Reactor Accident Analysis*, ORNL-3573, Table I.C.9, Oak Ridge National Laboratory, Oak Ridge, TN (1967).
19. *ORNL Physics Division Annual Progress Report for Period Ending May 31, 1968*, ORNL-4280, Oak Ridge National Laboratory, Oak Ridge, TN, October 1968.
20. *ORNL Physics Division Annual Progress Report for Period Ending August 1, 1965*, ORNL-3858, Oak Ridge National Laboratory, Oak Ridge, TN, November 1965.
21 *X-5 Monte Carlo Team, MCNP – A General Monte Carlo N-Particle Transport Code*, Version 5, Los Alamos National Laboratory, LA-UR-03-1987, April 24, 2003.
22. N. Xoubi and R. T. Primm III, *Modeling of the High Flux Isotope Reactor Cycle 400*, ORNL/TM-2004/251, Oak Ridge National Laboratory, Oak Ridge, TN (2005).
23. D. Chandler, R. T. Primm III, and G. I. Maldonado, *Validation of a Monte Carlo Based Depletion Methodology with HFIR Post-Irradiation Examination Data*, ORNL/TM-2009/123, Oak Ridge National Laboratory, Oak Ridge, TN, July 2009.
24 W. Haeck, An Optimum Approach to Monte Carlo Burnup, Ph.D. Thesis, Ghent University, Belgium (2007).
25. D. R. Vondy, T. B. Fowler, and G. W. Cunningham III, *The BOLD VENTURE Computation System for Nuclear Reactor Core Analysis, Version III,* ORNL-5711, Oak Ridge National Laboratory, Oak Ridge, TN (1981).
26. *SCALE: A Modular Code System for Performing Standardized Computer Analyses for Licensing Evaluation,* ORNL/TM-2005/39, Version 6, Vols. I–III, January 2009. (Available from Radiation Safety Information Computational Center at Oak Ridge National Laboratory as CCC-750.)
27. A. Bergeron, personal communication at the ANL-HFIR meeting at Oak Ridge National Laboratory, Oak Ridge, TN, June 6, 2012.
28. R. T. Primm III, R. J. Ellis, J. C. Gehin, D. L. Moses, and J. L. Binder, *Assumptions and Criteria for Performing a Feasibility Study of the Conversion of the High Flux Isotope Reactor Core to Use Low-Enriched Uranium Fuel*, ORNL/TM-2005/269, Oak Ridge National Laboratory, Oak Ridge, TN (2006).
29. *HFIR Updated Safety Analysis Report,* Rev. 6B, ORNL/HFIR/USAR/2344, Oak Ridge National Laboratory, Oak Ridge, TN.
30. D. Lee, K. Smith, and J. Rhodes, "The Impact of ^{238}U Resonance Elastic Scattering Approximations on Thermal Reactor Doppler Reactivity," *Proceedings of the International Conference on Reactor Physics*, Interlaken, Switzerland, September 14–19, 2008.
31. R. D. Cheverton and T. M. Sims, *Analysis of Selected HFIR Critical Experiment Data for Period August 25 through October 22, 1965*, ORNL-CF-62-12-2, Oak Ridge National Laboratory, Oak Ridge, TN (1965).
32. D. G. Renfro, D. Chandler, D. H. Cook, J. D. Freels, F. P. Griffin, G. Ilas, R. T. Primm III, and J. D. Sease, *Low-Enriched Uranium Fuel Conversion Activities for the High Flux Isotope Reactor, Annual Report for FY 2011*, ORNL/TM-2011/507, Oak Ridge National Laboratory, March 2012.
33. R. D. Cheverton and T. M. Sims, *Analysis of Selected HFIR Critical Experiment Data for Period August 25 through October 22, 1965*, ORNL-CF-65-12-2, Oak Ridge National Laboratory, Oak Ridge, TN, December 1, 1965.
34. NEA Nuclear Science Committee, *International Handbook of Evaluated Criticality Safety Benchmark Experiments*, 2010.
35. D. F. Hollenbach, L. M. Petrie, S. Goluoglu, N. F. Landers, and M. E. Dunn, *Keno-VI: A General Quadratic Version of the KENO Program*, ORNL/TM-2005/39, Version 6.1, Sect. F17, Oak Ridge National Laboratory, Oak Ridge, TN, June 2011.

36. D. Ilas, *Development of a SCALE Model for High Flux Isotope Reactor Cycle 400*, Oak Ridge National Laboratory, ORNL/TM-2011/367, Oak Ridge National Laboratory, Oak Ridge, TN, February 2012.
37. B. T. Rearden, *TSUNAMI-3D: Control Module for Three-Dimensional Cross-Section Sensitivity and Uncertainty Analysis for Criticality*, ORNL/TM-2005/39, Version 6.1, Sect. C9, Oak Ridge National Laboratory, Oak Ridge, TN, June 2011.
38. United States Department of Energy, *Implementation Guide for Use in Developing Documented Safety Analyses to Meet Subpart B of 10 CFR 830*, DOE G 421.1-2A, December 19, 2011.
39. United States Nuclear Regulatory Commission, *Standard Format and Content of Safety Analysis Reports for Nuclear Power Plants (LWR Edition)*, NRC Reg. Guide 1.70, November 1978.
40. American Nuclear Society, *Format and Content for Safety Analysis Reports for Research Reactors*, ANSI/ANS-15.21-1996 (R2006), September 29, 2006.
41. United States Nuclear Regulatory Commission, *Guidelines for Preparing and Reviewing Applications for the Licensing of Non-Power Reactors*, NUREG-1537, February 1996.
42. United States Department of Energy, *Preparation Guide for the U.S. Department of Energy Nonreactor Nuclear Facility Documented Safety Analyses*, DOE-STD-3009-94, Change Notice 3, March 2006.
43. American Nuclear Society, *Nuclear Criticality Safety in Operations with Fissionable Material Outside Reactors*, ANSI/ANS-8.1-1998 (R2007), May 16, 2007.
44. United States Department of Energy, *Guidelines for Preparing Criticality Safety Evaluations at Department of Energy Nonreactor Nuclear Facilities*, DOE-STD-3007-2007, February 2007.
45. American Nuclear Society, *Conduct of Critical Experiments*, ANSI/ANS-1-2000, Oct. 11, 2007.
46. CEF Main. United States Department of Energy, n.d. Web. 27 Nov. 2012 <http://ncsp.llnl.gov/cefMain.html>.
47. Class Main. United States Department of Energy, n.d. Web. 27 Nov. 2012 <http://ncsp.llnl.gov/classMain.html>.
48. G. A. Harms and N. F. Schwers, *Water-Moderated U(4.31)O2 Fuel Rod Lattices Containing Rhodium Foils*, Evaluation LEU-COMP-THERM-079, *International Handbook of Evaluated Criticality Safety Benchmark Experiments*, Organization for Economic Cooperation and Development—Nuclear Energy Agency, NEA/NSC/DOC(95)03 (2010 Edition).
49. G. A. Harms, J. T. Ford, and A. D. Miller, "Results of the First Set of Criticals in the Seven Percent Critical Experiment," *Proceedings of the International Conference of Nuclear Criticality Safety*, Edinburgh, U.K., September 19–22, 2011.
50. D. W. Nigg, J. W. Nielsen, and G. K. Taylor, "Validation Protocols to Support the Neutronics Modeling, Simulation, and V&V Upgrade for the Advanced Test Reactor," *Trans. Am. Nucl. Soc.* **106**, 890–893 (2012).
51. Rensselaer Polytechnic Institute, *Rensselaer Polytechnic Institute Reactor Critical Facility Relicensing Report*, December 2002.
52. J. Thompson, Email regarding the RPI Reactor Critical Facility, September 17, 2012.
53. B. P. Bromley, "Advanced Heavy Water Reactors (AHWRs), Supplement 1: R&D Activities for HWR Design and Safety Analysis," presentation to the 2010 Frederic Joliot & Otto Hahn Summer School, Aix-en-Provence, France, September 2010.
54. B. Wilkin, Email regarding the ZED-2 Reactor Critical Facility, September 14, 2012.
55. International Atomic Energy Agency, *Critical Experiments and Reactor Physics Calculations for Low Enriched High Temperature Gas Cooled Reactors*, IAEA-TECDOC-1249, October 2001.
56. Y. Yamane and Y. Miyoshi, "IAEA's Effort and New Program for Criticality Safety of Nuclear Fuel Facility," presentation to the OECD-NEA Workshop on Future Criticality Safety Research Needs, Pocatello, Idaho, September 2009.

57. E. Girault, P. Gouillaud, J. Legendre, and V. Rouyer, "Potential of CEA Valduc Criticality Laboratory and IRSN Projects for Critical Experiments," *Proceedings of the American Nuclear Society Nuclear Criticality Safety Division Topical Meeting*, Knoxville, TN (2005).
58. United States Department of Energy, *United States Department of Energy Nuclear Criticality Safety Program Five-Year Execution Plan for the Mission and Vision FY 2009 through FY 2013*, September 2008.
59. V. Gurin, V. Sviridov, and B. Ryazanov, *Survey of Integral Nuclear Criticality Safety Experiments Performed at SSC RF IPPE*, International Conference on Nuclear Criticality Safety, Albuquerque, NM (1995).
60. V. A. Teryokhin, V. D. Perezhogin, and Yu. A. Sokolov, *Criticality Measurements at VNIITF Review*, International Conference on Nuclear Criticality Safety, Albuquerque, NM (1995).
61. A. M. Voinov, V. G. Zagrafov, M. I. Kuvshinov, and V. I. Yuferev, *The Overview of VNIIEF Nuclear Criticality Safety* Research, International Conference on Nuclear Criticality Safety, Albuquerque, NM (1995).
62. C. M. Hopper, "U.S. DOE/Oak Ridge Nuclear Criticality Safety (NCS) Program Education and Training Center of Excellence," presentation, Oak Ridge National Laboratory, Oak Ridge, TN (2006).
63. C. M. Hopper, "Background Information/Explanation for US DOE NCSP NCS Education and Training (FY 2007 thru 2010)," presentation, Oak Ridge National Laboratory, Oak Ridge, TN (2006).