Generic Repository Concepts and Thermal Analysis for Advanced Fuel Cycles

Ernest Hardin[1], James Blink[2], Joe Carter[3], Massimiliano Fratoni[4], Harris Greenberg[5], and Robert Howard[6]

[1] Sandia National Laboratories, P.O. Box 5800 MS 0736, Albuquerque NM 87185 ehardin@sandia.gov (corresponding author)
[2] Lawrence Livermore National Laboratory, P.O. Box 808, Livermore, CA 94551-0808 blink1@llnl.gov
[3] Savannah River National Laboratory, Savannah River Site, Aiken, SC 29808 joe.carter@srs.gov
[4] Lawrence Livermore National Laboratory fraton1@llnl.gov
[5] Lawrence Livermore National Laboratory greenberg6@llnl.gov
[6] Oak Ridge National Laboratory, P.O. Box 2008, Oak Ridge, TN 37831 howardrl1@ornl.gov

Introduction

The current posture of the used nuclear fuel management program in the U.S. following termination of the Yucca Mountain Project, is to pursue research and development (R&D) of generic (i.e., non-site specific) technologies for storage, transportation and disposal. Disposal R&D is directed toward understanding and demonstrating the performance of reference geologic disposal concepts selected to represent the current state-of-the-art in geologic disposal. One of the principal constraints on waste packaging and emplacement in a geologic repository is management of the waste-generated heat. This paper describes the selection of reference disposal concepts, and thermal management strategies for waste from advanced fuel cycles.

A geologic disposal concept for spent nuclear fuel (SNF) or high-level waste (HLW) consists of three components: waste inventory, geologic setting, and concept of operations. A set of reference geologic disposal concepts has been developed by the U.S. Department of Energy (DOE) Used Fuel Disposition Campaign, for crystalline rock, clay/shale, bedded salt, and deep borehole (crystalline basement) geologic settings. We performed thermal analysis of these concepts using waste inventory cases representing a range of advanced fuel cycles. Concepts of operation consisting of emplacement mode, repository layout, and engineered barrier descriptions, were selected based on international progress and previous experience in the U.S. repository program.

All of the disposal concepts selected for this study use enclosed emplacement modes, whereby waste packages are in direct contact with encapsulating engineered or natural materials. The encapsulating materials (typically clay-based or rock salt) have low intrinsic permeability and plastic rheology that closes voids so that low permeability is maintained. Uniformly low permeability also contributes to chemically reducing conditions common in soft clay, shale, and salt formations. Enclosed modes are associated with temperature constraints that limit changes to the encapsulating materials, and they generally have less capacity to dissipate heat from the waste package and its immediate surroundings than open modes such as that proposed for a repository at Yucca Mountain, Nevada. Open emplacement modes can be ventilated for many years prior to permanent closure of the repository, limiting peak temperatures both before and after closure, and combining storage and disposal functions in the same facility. Open emplacement modes may be practically limited to unsaturated host formations, unless emplacement tunnels are effectively sealed everywhere prior to repository closure.

Thermal analysis of disposal concepts and waste inventory cases has identified important relationships between waste package size and capacity, and the duration of surface decay storage needed to meet temperature constraints. For example, the choice of salt as the host medium

expedites the schedule for geologic disposal by approximately 50 yr (other factors held constant) thereby reducing future reliance on surface decay storage. Rock salt has greater thermal conductivity and stability at higher temperatures than other media considered. Alternatively, the choice of salt permits the use of significantly larger waste packages for SNF. The following sections describe the selection of reference waste inventories, geologic settings, and concepts of operation, and summarize the results from the thermal analysis.

Waste Inventory

The waste inventory cases considered here include (Carter et al. 2011a): 1) direct disposal of SNF from the current light-water reactor (LWR) fleet, represented by Generation III+ advanced LWRs being developed through the DOE Nuclear Power 2010 Program, operating in a once-through cycle; 2) HLW generated from reprocessing spent LWR fuel to recover U and Pu, and subsequent direct disposal of used Pu-MOX fuel also burned in LWRs, in a modified-open cycle; and 3) waste generated by continuous recycling of metal fuel from fast reactors operating in a transuranic (TRU) burner configuration (conversion ratio 0.75), with additional TRU material input supplied by reprocessing of additional LWR used fuel. The fuel burnup, waste forms, and isotopic content are summarized in Table 1. The once-through, modified-open, and full-recycle strategies are consistent with the DOE/Nuclear Energy R&D Roadmap (DOE 2010), and the waste types adopted for this study are intended to represent heat-producing nuclear waste from a wide (although not exhaustive) range of possible fuel cycles.

The heat output vs. time out-of-reactor for these waste forms is compared in Figure 1. The HLW canisters stand out in Figure 1 because we assume a modern, highly loaded glass composition so that each pour canister of HLW results from reprocessing of approximately 2.5 MT of LWR used nuclear fuel (UNF). Heat output for the MOX SNF decays relatively slowly because TRU isotopes with intermediate half lives (e.g., Am-241) are more abundant.

Geologic Setting

The geologic setting provides the natural barriers, and establishes the boundary conditions for performance of engineered barriers (e.g., reducing chemical conditions inhibit degradation of certain waste forms). Characteristics of the host medium can play an important role in limiting the transport of radionuclides away from the engineered barriers, to other geologic units, and eventually to the accessible environment. The thickness, lateral extent, and heterogeneity of host units, and the relationships to other geologic units, are important. The composition and physical properties of the host medium dictate design and construction approaches, and determine hydrologic and thermal responses of the repository system.

The 48 contiguous states contain many geologic settings likely to be technically favorable for geologic disposal of nuclear waste. Reviews by Hansen et al. (2011) and Rechard et al. (2011) each cite some of the extensive work done internationally and in the U.S. to investigate potential host media. Consideration of alternative disposal concepts in the 1970s and 1980s included deep borehole, sub-seabed, shallow alluvium, rock melt, direct injection, and ice-sheet disposal, in addition to mined geologic disposal (Rechard et al. 2011). Hydrogeologic settings that have been considered include saturated, unsaturated, coastal, stable interior, and island settings (Rechard et al. 2011). Mined geologic disposal was selected for development in the U.S. and other countries as the most promising approach compared with various alternatives, based on the extent of R&D that would be required, constraints from treaties and international law, and other considerations.

Deep borehole disposal has been further investigated recently (SKB 1992, 2010; Brady et al. 2009) and is the leading alternative to mined geologic disposal.

Table 1. Characteristics of waste types for advanced fuel cycles considered in the study.

Fuel Cycle Case	Waste Generating Process	Fuel Burnup (GW-d/MT)	Waste Type	Elemental/Isotopic Content
1	Direct disposal	60	UOX SNF	All components of LWR UOX UNF
2	COEX[1] reprocessing of LWR UOX UNF	51	Borosilicate HLW Glass	All components of LWR UOX UNF except Pu isotopes
	Direct disposal	50	Pu-MOX SNF	All components of Pu-MOX UNF
3	Aqueous reprocess-sing of LWR UOX UNF (New extraction[2] method)	51	Borosilicate HLW Glass	All components of LWR UOX UNF except TRUs
	Electrochemical reprocessing of fast-reactor metal fuel	100	Bonded Zeolite	Fission products and excess salt
	Electrochemical reprocessing of fast-reactor metal fuel	100	Metal Alloy	Hulls, hardware and noble metal fission products
	Electrochemical reprocessing of fast-reactor metal fuel	100	Lanthanide Glass	Lanthanides

[1] The Co-Extraction method envisioned is simple and technically mature; similar to the current generation of deployed reprocessing technology (e.g., at the Rokkasaho plant in Japan).

[2] New Extraction is an advanced aqueous process which recovers all TRUs for re-use. The process envisioned includes Transuranic Extraction (TRUEX) and Trivalent Actinide Lanthanide Separation by Phosphorus-based Aqueous [K]omplexes (TALSPEAK) processes for complete TRU recovery.

Suitable geologic formations typically exhibit favorable depth, thickness, uniformity, tectonic stability, and other key geologic characteristics that limit waste dissolution and radionuclide transport. Key geologic and hydrologic attributes of the host rock also may include: low permeability (e.g., 10^{-19} m^2 or lower); self-sealing characteristics (plasticity) characteristics; and reducing chemical conditions that minimize degradation rates for engineered materials, and limit radionuclide solubility and transport. Other considerations that could be important in project siting include the potential for disruption by faulting or seismicity, human intrusion, and sociopolitical issues such as proximity to population centers.

Crystalline Rock Formations – The 48 conterminous states have an abundance of crystalline rock formations (Hansen et al. 2011). Several countries have determined that crystalline rock ("granite") formations are adequate for mined geologic disposal. Following enactment of the NWPA in 1982, the U.S. had an active second-repository program that evaluated crystalline rock formations. Granite investigations prior to enactment of the NWPA amendments (NWPAA) in

1987 included a full-scale demonstration in an underground research laboratory at the Climax Stock on the Nevada Test Site (Rechard et al. 2011).

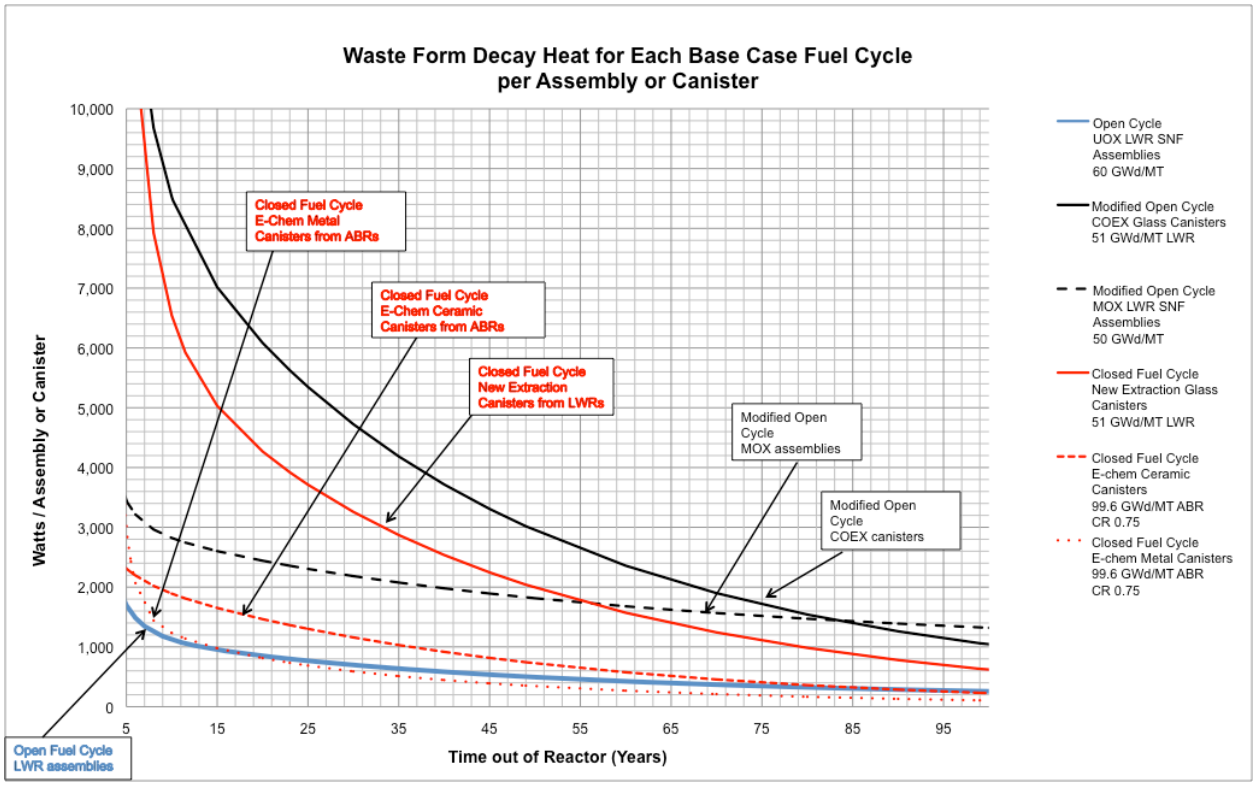

Figure 1. Heat output per assembly or per canister, for waste types considered in the study.

The NWPAA ended the crystalline repository program in the U.S., but R&D programs for waste disposal in crystalline rock continued in Canada, Finland, Sweden, and Switzerland, and are also ongoing in Japan and Korea. Mined repositories in crystalline rock are currently scheduled to open in 2020 in Finland and 2025 in Sweden. Crystalline rock is also considered as a possible host medium by several other countries including China and the United Kingdom.

Salt Formations – Use of salt formations for nuclear waste disposal originally recommended by the National Academy of Sciences (NAS 1957), and a geologic repository for TRU waste has been successfully operated at the Waste Isolation Pilot Plant near Carlsbad, New Mexico for 11 yr. The conterminous U.S. has many large salt formations including bedded and domal salt (Hansen et al. 2011). Four major regions of the U.S. where salt formations are found include: 1) Gulf Coast; 2) Permian Basin; 3) Michigan-Appalachian region; and 4) Williston Basin. Domal salts are found in the Gulf Coast and Paradox Basin, while bedded salt predominates in the other regions of North America. Full-scale underground disposal demonstrations and/or underground research laboratories were undertaken at salt sites near Lyons, Kansas, at Avery Island in Louisiana, and near Carlsbad, New Mexico. In 1985 the Secretary of Energy nominated three salt repository sites for further consideration (among a broader portfolio), and the President subsequently selected one of these to fully characterize. Like the crystalline repository program, the salt repository program was ended by enactment of the NWPAA in 1987.

Clay or Shale Formations – Shale formations meeting the general guidelines for depth, thickness, and other criteria summarized above are also common in the U.S. (Hansen et al. 2011). Shale includes a spectrum of rocks with different characteristics grading from unconsolidated clay stone, to lightly indurated mudstone having shale texture and composition, to a compact argillite. An early study by Gonzales and Johnson (1984) concluded that the most desirable host rocks should be between 300 and 900 m below ground level, at least 75 m thick, relatively homogeneous, and in an area of low seismicity and favorable hydrology that is not likely to be intensively exploited for subsurface resources.

Some characterization of shale as a host medium for waste disposal in U.S. has been undertaken. From the 1970s until the mid 1980s Oak Ridge National Laboratory (ORNL) led the U.S. R&D effort in this area, directing limited programs to characterize a few shale formations. Shale programs were supported by laboratory testing and limited field testing, but no underground research laboratory was developed nor was any disposal demonstration conducted in the U.S. Until such time as the U.S. repository program investigates specific shale formations, international collaborations with France and Switzerland are likely to be the most important sources of information.

Deep Borehole Disposal – Deep borehole disposal in generic crystalline basement rock could be located virtually anywhere that pre-Cambrian basement rock is within about 2 km of the ground surface. Deep borehole disposal is attractive in part due to the wide expanse of crystalline basement rock at appropriate depth in the lower 48 states (Hansen et al. 2011). Though the elevated temperature and salinity of deep fluids could accelerate corrosion of waste containers and the waste itself, the low permeability, high salinity, and geochemically reducing conditions present at many locations in the deep crystalline basement show that fluid flow and radionuclide transport are strongly limited.

Other Geologic Media – In addition to clay and shale, carbonate rock may prove to be suitable for hosting a HLW repository. Sedimentary carbonates (e.g., chalk and limestone) are thought to have favorable physical and chemical characteristics, and they exhibit moderate resistance to thermal damage. Carbonate rock is commonly subject to dissolution processes, especially if fractured or otherwise permeable to groundwater, and suitability would depend on site-specific formation characteristics. Although not much HLW repository concept development has been done to date with respect to carbonate formations, the Ontario Power Generation company of Canada has proposed to build a repository for low-level and intermediate-level waste in limestone at a depth of 680 m (Rechard et al. 2011).

The disposal option in unsaturated, volcanic rock at Yucca Mountain site has been extensively described in many documents supporting the June, 2008 license application for repository construction (DOE 2008). Additional analysis of unsaturated, crystalline rock settings (including volcanic tuff) was not needed in the present generic study because much is known already from characterizing the Yucca Mountain site.

Engineering Concepts of Operations

Generally, the engineering concept of operations takes into account the characteristics of the waste requiring disposal (i.e., radionuclide inventory and chemical form) and the geologic setting, to complete the disposal system. The concept of operations includes repository depth and layout, excavation approach (e.g., mined or deep borehole), construction details, emplacement mode, waste package size and materials, segregation of waste types, emplacement of non-heat

generating waste, selection of engineered materials, operational details, seals and plugs, performance monitoring, and repository closure. This study considers concepts of operation at a high level, including emplacement mode, waste package type, major features of the engineered barrier system (EBS), and repository layout, as appropriate for generic disposal evaluations. Further specification of the engineering concept of operations will require site-specific information.

Thermal Constraints – The following thermal constraints are associated with near-field processes in the host rock and/or the EBS (Hardin et al. 2011):

- Limit physical or chemical changes to clay buffers.
- Limit temperature of the host medium to control uncertainty in performance models (for mined disposal in clay/shale, salt, or crystalline media)
- Limit the waste package temperature to control material degradation, or to represent peak temperature anywhere outside the waste package.
- Limit spent fuel cladding temperature to 350°C, or limit the peak temperature of borosilicate glass to below 500°C, anytime after permanent disposal.

Available Control Measures for Thermal Management – Thermal management measures to meet the constraints above are available to repository designers and operators, for open or enclosed emplacement modes:

- Select host rock with strong conductive heat dissipation properties
- Use smaller waste packages to improve heat transfer and limit peak temperature
- Surface decay storage (aging) of waste types prior to emplacement in the repository
- Blend different types or ages of waste within waste packages to decrease heat total package output
- Increase waste package spacing, or sequence hotter and cooler packages in adjacent locations, to limit long-term peak temperature (after decay of short-lived fission products)
- Separate heat-generating radionuclides in waste, and segregate disposal of the hottest isotopes and their waste forms, limiting the extent of thermal degradation

Another measure available only for open emplacement modes is to cool the repository for tens to hundreds of years after emplacement and before permanent closure, thereby limiting peak temperatures both during preclosure and early postclosure periods.

Selection of Disposal Concepts

As discussed above, a disposal concept consists of three parts: waste inventory, geologic setting, and the concept of operations. Three waste inventory cases were identified, comprising 6 heat-producing waste forms for thermal analysis. Three geologic settings were selected for mined disposal: crystalline rock, clay/shale, and bedded salt, based on international experience and previous studies in the U.S. Combining these, the selected reference mined disposal concepts (Figures 2 through 5) follow those developed by Sweden and France for the crystalline and clay/shale settings, respectively, and the generic salt repository concept developed in the U.S. (Carter et al. 2011b). Bedded salt is preferable to salt domes to accommodate a repository with

large areal extent. By choosing these geologic settings we benefit from decades of international R&D. A crystalline basement setting accessed by deep surface-based boreholes was also selected. Details of the selected disposal concepts are listed in Table 2.

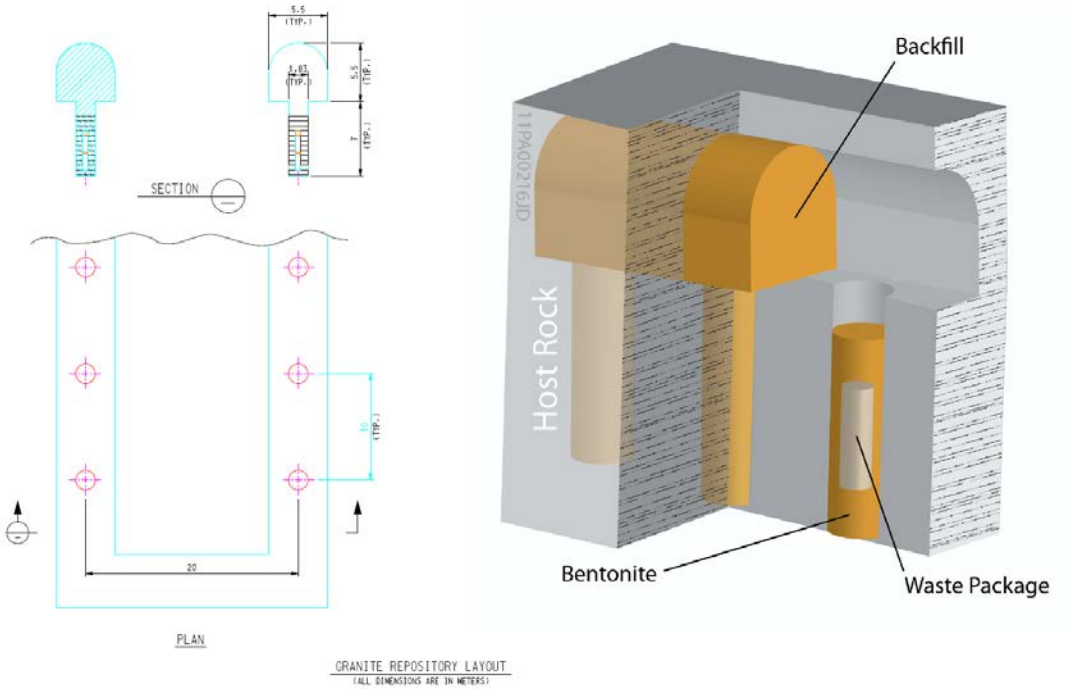

Figure 2. Reference disposal concept for crystalline rock (granite; after Hardin et al. 2011).

Thermal Analysis Approach

The following discussion summarizes the approach usec by Greenberg et al. (this conference) for thermal analysis. The approach calculates the temperature history at or near the interface between the EBS and the host medium, then uses this to calculate a temperature history at the waste package surface. For the EBS-rock interface, the model is a transient solution for a uniform, homogeneous medium representing the rock and the EBS (with rock properties), and with the heat source being a combination of: 1) a finite line source for the central waste package; 2) point sources for nearby packages; and 3) infinite line sources for neighboring drifts. To extend this solution to the waste package surface, a separate, steady-state calculation was performed at each point in time, propagating the thermal power through annular regions representing the waste package and other EBS components, and using the EBS-rock interface solution as the outer temperature boundary condition. In this way the effect from different thermal properties for EBS components, on the waste package surface temperature, can be taken into account. This is an approximate solution that is appropriate for slowly varying conditions. It tends to slightly overestimate temperatures by neglecting heat storage in the EBS, and to slightly underestimate temperatures around the central package by neglecting low-conductivity EBS materials present at the waste package ends.

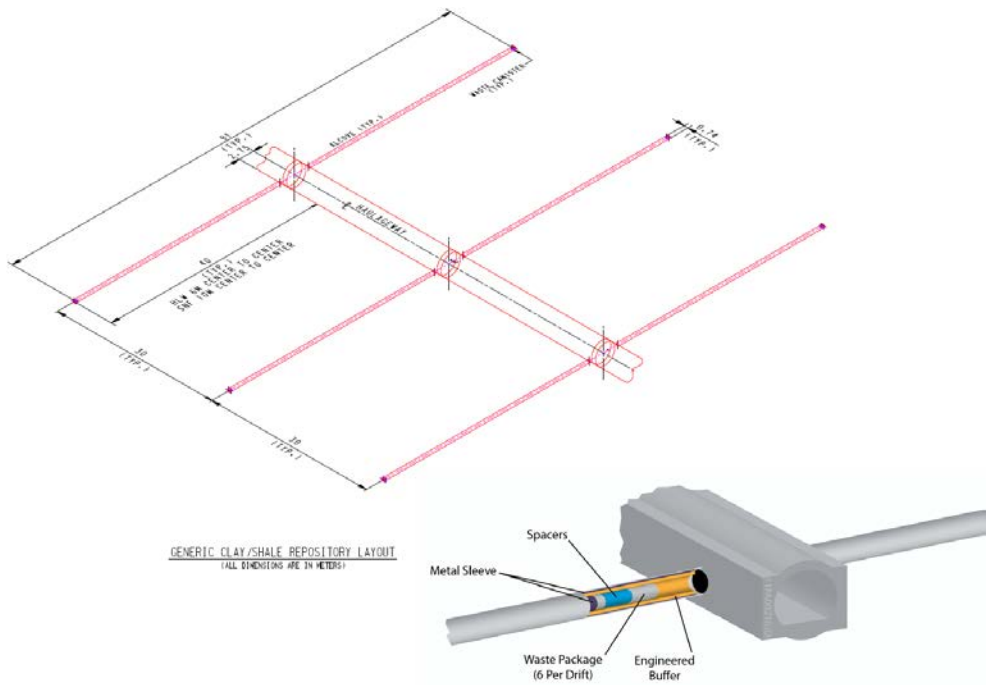

Figure 3. Reference disposal concept for HLW disposal in clay/shale media (Hardin et al. 2011).

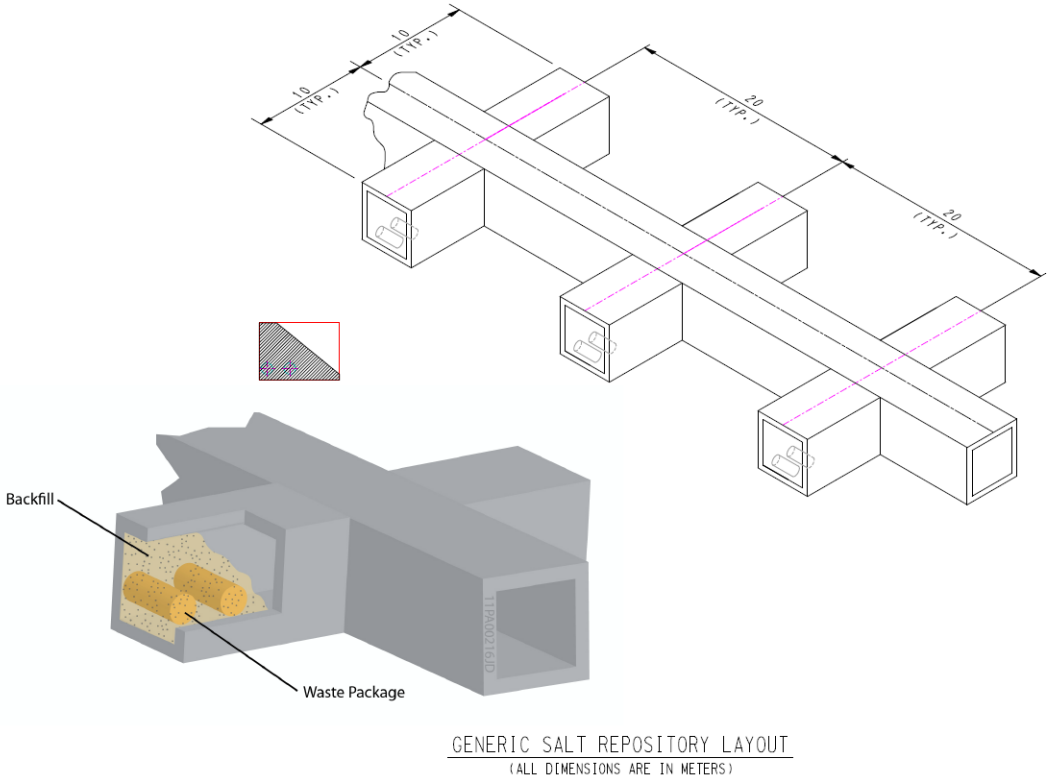

Figure 4. Reference disposal concept for HLW and SNF disposal in bedded salt (Hardin et al. 2011, after Carter et al. 2011b).

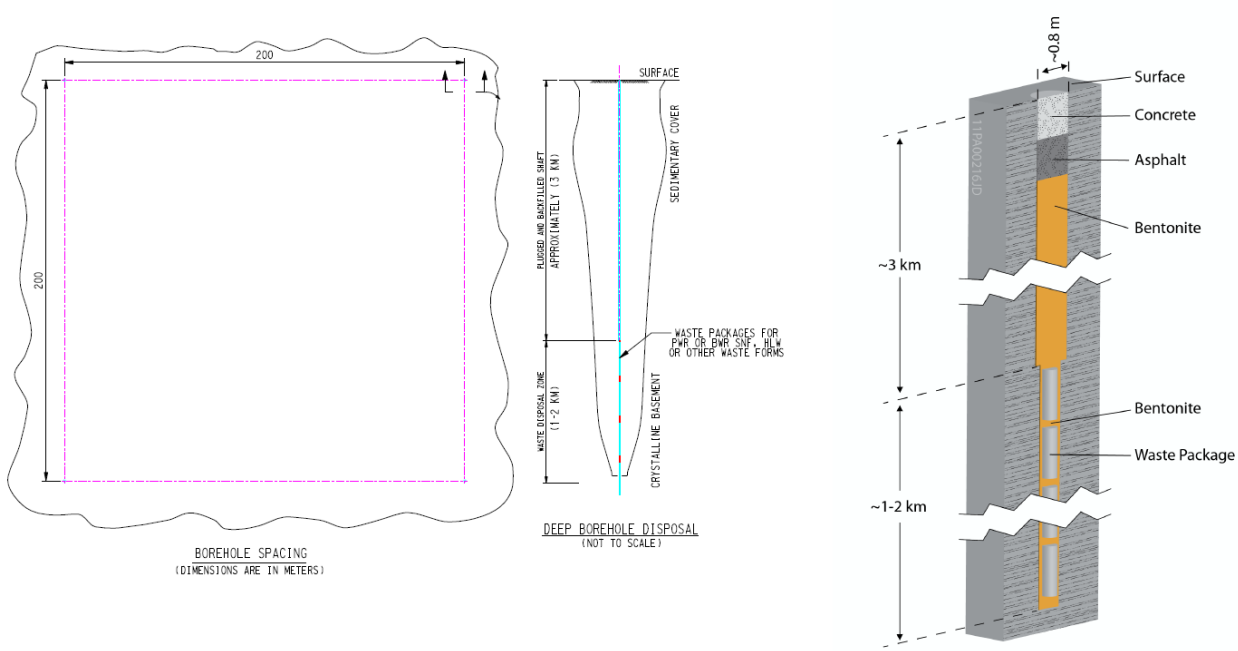

Figure 5. Reference disposal concept for deep borehole disposal of HLW and SNF (Hardin et al. 2011, after Brady et al. 2009).

Temperature Results

As an example, Figure 6 plots the temperature transient at the EBS-rock interface after surface decay storage times of 10, 50, and 100 years, for a repository in a clay/shale medium with representative thermal properties, for waste packages containing 1, 2, 4, or 12 UOX assemblies (60 GW-d/MT burnup). For all cases except salt, the EBS-host rock "calculation radius" corresponds exactly to the wall of the rock opening (for salt it is 4 meters within the host rock). In the deep borehole setting, where the adjacent lines of packages are widely spaced (200 m), the temperature peaks sooner than for the other concepts. In the other media the temperature peaks after a few decades. Note that the time from emplacement to the peak temperature increases with decay storage, because after decay of the short-lived fission products the waste heat output decreases more slowly.

The limiting temperatures (called target maximum temperatures in Table 2) considered in this study depend on the design concept and host medium, and they are defined at the waste package surface. Using these limiting temperatures, we back-calculated the needed duration of surface decay storage, for different disposal concepts, waste types, and waste package capacities. The results are discussed below. Further details of the thermal analysis are provided by Greenberg et al. (this conference).

Table 2. Reference disposal concepts and limiting temperatures.

Geologic Media/Concept	Mined Crystalline	Mined Clay/Shale	Mined Bedded Salt	Deep Borehole
Repository depth	~500 m	~500 m	~500 m	>3000 m
Hydrologic setting	Saturated	Saturated	Saturated	Saturated
Ground support material	Rockbolts, wire cloth & shotcrete	Steel sets & shotcrete	Rockbolts	NA
Seals and plugs	Shaft & tunnel plugs and seals	Shaft & tunnel plugs and seals	Shaft & tunnel plugs and seals	Borehole seals
Normalized Areal Loading (GWe-yr/acre)	1 to 10	1 to 10	1 to 10	<1
Waste package surface target max. temperature	**100°C**	**100°C**	**200°C**	**NA**
SNF Emplacement Mode	**Vertical emplacement boreholes**	**Horizontal in-drift emplacement**	**Horizontal alcove emplacement**	**Vertical emplacement, stacked**
WP configuration	4-PWR	4-PWR	4-PWR	1 PWR assembly (with rod consolidation)
Overpack material	Copper or steel [1]	Steel [1]	Steel [1]	Steel [1]
Package dimensions	0.96 m D x 5 m L	0.98 m D x 5 m L	0.82 m D x 5 m L	0.34 m D x 5 m L
Drift/borehole dia.	1.66 m (boreholes)	2.64 m (drifts)	5 m (nominal; alcoves)	45 cm (boreholes)
Drift/borehole spacing	20 m (drifts) 10 m (boreholes)	30 m (drifts) 10 m (packages)	Packages on 20-meter grid	>100 m (boreholes)
Borehole liner	None	Steel [1]	NA	Steel [1]
Buffer material	Bentonite clay	Bentonite clay	NA	NA
Backfill material	Clay/sand mixture	Crushed clay/shale	Crushed salt	NA
HLW Emplacement Mode	**Vertical emplacement boreholes**	**Horizontal parallel boreholes**	**Horizontal alcove emplacement**	**Vertical emplacement, stacked**
Overpack material	Steel [1]	Steel [1]	Steel [1]	Steel [1]
Drift/borehole dia.	1.52 m	0.75 m (boreholes)	5 m (nominal; alcoves)	>45 cm (boreholes)
Drift/borehole spacing	20 m (drifts) 10 m (boreholes)	30 m (boreholes) 6 m (packages)	40 m (drifts) 20 m (alcoves) Result: packages on 20-meter grid	>100 m (boreholes)
Borehole liner	None	Steel[1B]	NA	Steel [1]
Buffer material	Bentonite clay	NA	NA	NA
Backfill material	Clay/sand mixture	Crushed clay/shale	Crushed salt	NA
Non-Heat Generating Waste	**Stacked in access tunnels**	**Stacked in access tunnels**	**Stacked in access tunnels**	**Assume near-surface disposal**
Package construction	Steel or concrete [1]	Steel or concrete [1]	Steel or concrete [1]	NA
Drift/borehole dia.	NA	NA	NA	NA
Borehole liner material	NA	NA	NA	NA
Buffer material	NA	NA	NA	NA
Radiation shielding	Backfill	Backfill	Backfill	NA
Backfill material	Clay/sand mixture	Clay/sand mixture	Crushed salt	NA

[1] The types of materials to be used in these applications, such as the types of steel, are to-be-determined but for this study they are considered to be readily available and relatively low-cost.

Thermal Results for Crystalline and Clay/Shale Disposal Concepts – A clay buffer is part of the crystalline rock disposal concept for SNF and HLW, and part of the clay/shale disposal concept for SNF. Various temperature limits for buffers composed of swelling clay have been proposed, for example, the French authority Andra has used a 90°C limit, while the Swedish program used a peak temperature of 100°C. Variations on clay buffer limits have been discussed, for example limiting a portion of the buffer cross section to 125°C (NAGRA 2003). In the current analysis a target maximum temperature of 100°C is used for clay buffers, and the same target is used for clay/shale host media because of mineralogical similarity to buffer materials. Thermal results for crystalline and clay/shale disposal concepts are therefore similar.

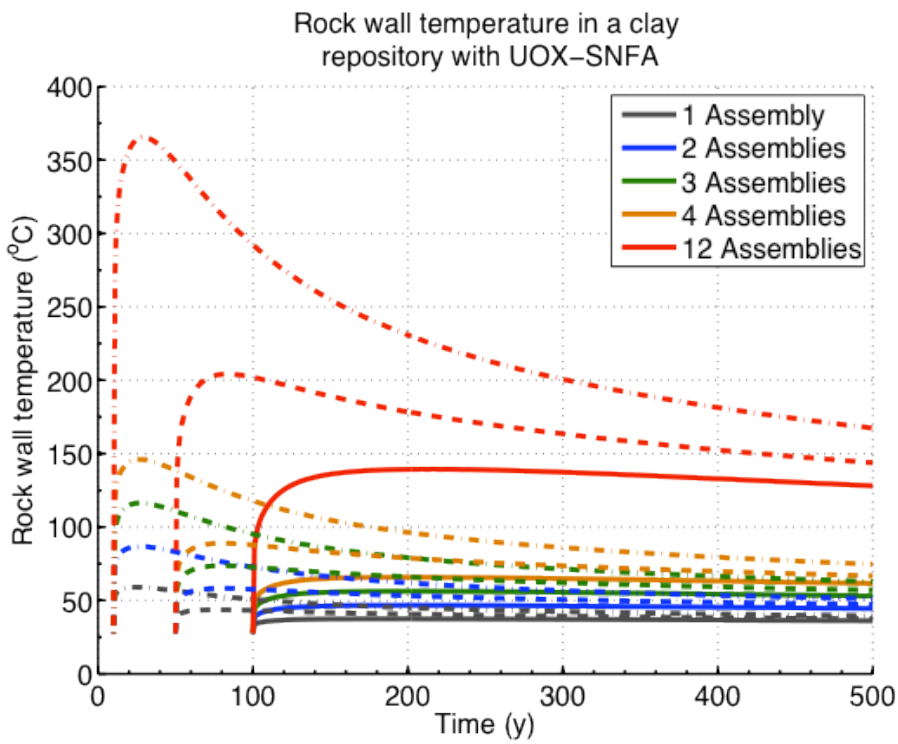

Note: Dash-dot lines are for 10 yr, dashed lines are for 50 yr, and solid lines are for 100 yr decay storage.

Figure 6. Temperature histories at the EBS-host rock interface ("calculation radius") after decay storage of 10, 50 and 100 yr, for waste packages containing 1, 2, 3, 4 and 12 UOX assemblies, for a repository in a clay/shale medium with representative properties.

Where used, the clay buffer is the dominant thermal resistance in the EBS outside the waste package. Using the 100°C constraint for waste package outer surface temperature, the following results were obtained for clay/shale and crystalline concepts:

- High-burnup LWR SNF (60 GW-d/MT) can be emplaced in 4-PWR waste packages after approximately 100 yr of surface decay storage (similar to current Swedish management practice for SNF).
- Waste packages containing a single high-burnup LWR SNF assembly could be emplaced after approximately 10 yr of surface decay storage.

- Waste packages containing a single Pu-MOX assembly would require more than 200 yr decay storage.
- HLW generated by reprocessing LWR UOX fuel could be emplaced after approximately 50 to 100 yr of decay storage. Other reprocessing waste such as that from electrochemical reprocessing of SFR metal fuel could be emplaced after fewer than 50 yr decay storage.

Larger waste packages could be used but would require additional decay storage to maintain target values for maximum temperature in the clay buffer or clay/shale host medium.

Thermal Results for the Salt Disposal Concept – The Environmental Assessment for disposal of SNF and HLW at the Deaf Smith County, Texas site suggested a maximum salt temperature of 250°C (DOE 1986). In more recent studies (Clayton and Gable 2009 and Carter et al. 2011b) a limit of 200°C was discussed. In the current analyses a target value of 200°C for the maximum temperature is used for comparative evaluations, producing these results:

- High-burnup LWR SNF (60 GW-d/MT) could be emplaced in 4-PWR waste packages after 10 yr, or 12-PWR packages could be emplaced after ~40 yr decay storage.
- Waste packages containing Pu-MOX SNF in the 4-PWR configuration would require approximately 110 yr decay storage.
- HLW generated by reprocessing LWR UOX fuel could be emplaced after approximately 10 to 50 yr of decay storage, depending on specific waste composition and other factors.

Thermal Management for the Deep Borehole Disposal Concept – For the deep borehole disposal concept no near-field temperature limits have been recognized because no performance credit is taken for the near-field host rock, and the boreholes would be spaced far enough apart to preserve the far-field borehole seal and natural barrier functions (Brady et al. 2009). Also, waste packages would be small, with limited capacity (Brady et al. 2009).

Waste Package Size/Capacity Limitations for Enclosed Modes – An important result of this work is that the reference mined disposal concepts selected in this report would use relatively small packages for SNF (e.g., 4-PWR/9-BWR) to limit peak temperatures while also limiting the duration of decay storage to on the order of 50 to 100 yr or less. These waste package size selections are consistent with current international repository concepts in Sweden, France, and elsewhere. These package sizes are significantly smaller than the 21-PWR transport-aging-disposal containers proposed for use at Yucca Mountain (DOE 2008), and smaller than the storage containers currently being loaded by U.S. nuclear utilities. Larger packages are always possible with longer decay storage (Greenberg et al., this conference), but decay storage beyond 50 to 100 yr involves substantial deferred costs for ultimate disposal.

Summary and Conclusions

These results show the key differences in thermal management strategies available to the U.S. nuclear waste management program, given the range of disposal concepts. A host medium such as salt with greater thermal conductivity and peak temperature tolerance could shorten decay storage and expedite disposal by approximately 50 years, or facilitate the use of larger waste packages within a timeframe of 50 to 100 yr. We note that while the temperature limits and waste package capacities used in this study are similar to those used internationally and in past U.S. studies, they might be increased as the result of ongoing research and development

activities. Also, while this study anticipates waste management for LWR UNF that will be produced in the coming decades, it has not calculated waste package size/capacity vs. decay storage needed for the existing, lower burnup, cooler LWR UNF that is presently in storage at many reactor locations across the U.S.

This study selected only enclosed emplacement modes to conform with disposal concepts developed internationally and in various U.S. studies. Open modes (such as that proposed for a repository at Yucca Mountain) afford additional flexibility in waste management and the necessary investment, because the same facility serves both storage and disposal functions. Use of open modes, and combined analysis of storage, transportation, and disposal functions, are appropriate to consider in future studies of this type.

References

Andra 2005. *Dossier 2005 argile – architecture and management of a geological disposal system.* December 2005. http://www.Andra.fr/international/download/Andra-international-en/document/editions/268va.pdf.

Blink, J., H. Greenberg, M. Sutton, M. Fratoni, J. Carter, M. Dupont and R. Howard 2011. *Generic Repository Design Concepts and Thermal Analysis (FY11).* FCRD-USED-2011-000143 Rev. 0. U.S. Department of Energy, Used Fuel Disposition R&D Campaign.

Brady, P.V., B.W. Arnold, G.A. Freeze, P.N. Swift, S.J. Bauer, J.L. Kanney, R.P. Rechard, and J.S. Stein 2009. *Deep borehole disposal of high-level radioactive waste.* SAND2009-4401. Albuquerque, NM: Sandia National Laboratories.

Carter, J., A. Luptak, and J. Gastelum 2011a. *Fuel cycle potential waste inventory for disposition.* FCR&D-USED-2010-000031, Rev. 3. April, 2011.

Carter, J.T., F. Hansen, R. Kehrman, and T. Hayes 2011b. *A generic salt repository for disposal of waste from a spent nuclear fuel recycle facility.* SRNL-RP-2011-00149 Rev. 0. Aiken, SC: Savannah River National Laboratory.

Clayton, D.J., and C.W. Gable 2009. *3-D thermal analyses of high-level waste emplaced in a generic salt repository.* AFCI-WAST-PMO-MI-DV-2009 000002. February, 2009.

DOE (U.S. Department of Energy) 1986. *Nuclear Waste Policy Act (Section 112), environmental assessment, Deaf Smith County Site, Texas.* DOE/RW-0069-Vol.3. OSTI ID: 5492729.

DOE (U.S. Department of Energy) 2008. *Yucca Mountain Repository License Application, Safety Analysis Report*. DOE/RW-0573, Update No. 1, November, 2008. Las Vegas, NV: Office of Civilian Radioactive Waste Management, U.S. Department of Energy.

DOE (U.S. Department of Energy) 2010. *Nuclear Energy Research and Development Roadmap: Report to Congress*. April 2010. Office of Nuclear Energy, Washington, D.C.

Hansen, F.D., E. Hardin, and A. Orrell 2011. "Geologic disposal options in the USA." *Waste Management 2011, February 27-March 3, 2011.* Phoenix, AZ.

NAGRA (Swiss National Cooperative for the Disposal of Radioactive Wastes) 2003. *Canister options for the disposal of spent fuel.* NAGRA Technical Report NTB 02-11.

NAS (U.S. National Academy of Science) 1957. *The disposal of radioactive waste on land: Report of the Committee on Waste Disposal of the Division of Earth Sciences.* Publication 519.

Washington, DC: National Academy of Sciences/National Research Council. http://books.nap.edu/openbook.php?record_id=10294#toc.

Rechard, R.P., B, Goldstein, L.H. Brush, J. Blink, M. Sutton, and F.V. Perry 2011. *Basis for identification of disposal options for research and development for spent nuclear fuel and high-level waste.* FCRD-USED-2011-000071. March, 2011.

SKB (Swedish Nuclear Fuel and Waste Management Co.) 1992. *Project on Alternative Systems Study (PASS). Final report.* SKB TR-93-04.

SKB (Swedish Nuclear Fuel and Waste Management Co.) 2011. *Long-term safety for the final repository for spent nuclear fuel at Forsmark: Main report of the SR-Site project, Volume I.* Technical Report TR-06-09.

Disclaimer

This information was prepared as an account of work sponsored by an agency of the U.S. Government. Neither the U.S. Government nor any agency thereof, nor any of their employees, makes any warranty, expressed or implied, or assumes any legal liability or responsibility for the accuracy, completeness, or usefulness, of any information, apparatus, product, or process disclosed, or represents that its use would not infringe privately owned rights. References herein to any specific commercial product, process, or service by trade name, trade mark, manufacturer, or otherwise, does not necessarily constitute or imply its endorsement, recommendation, or favoring by the U.S. Government or any agency thereof. The views and opinions of authors expressed herein do not necessarily state or reflect those of the U.S. Government or any agency thereof.