Proceedings of ICAPP 2011
Nice, France, May 2-5, 2011
Paper 11405

AN EXPERIMENT TO STUDY PEBBLE BED LIQUID-FLUORIDE-SALT HEAT TRANSFER

Graydon L. Yoder, Jr., Adam Aaron, Dennis Heatherly, David Holcomb, Roger Kisner, Mike McCarthy, Fred Peretz, John Wilgen, Dane Wilson
Oak Ridge National Laboratory, Oak Ridge, TN 37831, USA
phone: 011-865-574-5282, fax: 011-865-574-2032, e-mail: yodergljr@ornl.gov

Abstract *– A forced-convection liquid-fluoride-salt loop is being constructed at Oak Ridge National Laboratory (ORNL). This loop was designed as a versatile experimental facility capable of supporting general thermal/fluid/corrosion testing of liquid fluoride salts. The initial test configuration is designed to support the Pebble Bed Advanced High-Temperature Reactor and incorporates a test section designed to examine the heat transfer behavior of FLiNaK salt in a heated pebble bed. The loop is constructed of Inconel® 600 and is capable of operating at up to 700°C. It contains a total of 72 kg of FLiNaK salt and uses an overhung impeller centrifugal sump pump that can provide FLiNaK flow at 4.5 kg/s with a head of 0.125 MPa. The test section is made of silicon carbide (SiC) and contains approximately 600 graphite spheres, 3 cm in diameter. The pebble bed is heated using a unique inductive technique. A forced induction air cooler removes the heat added to the pebble bed. The salt level within the loop is maintained by controlling an argon cover gas pressure. Salt purification is performed in batch mode by transferring the salt from the loop into a specially made nickel crucible system designed to remove oxygen, moisture and other salt impurities.*

Materials selection for the loop and test section material was informed by 3 months of Inconel® 600 and SiC corrosion testing as well as tests examining subcomponent performance in the salt. Several SiC-to-Inconel® 600 mechanical joint designs were considered before final salt and gas seals were chosen. Structural calculations of the SiC test section were performed to arrive at a satisfactory test section configuration. Several pump vendors provided potential loop pump designs; however, because of cost, the pump was designed and fabricated in-house. The pump includes a commercial rotating dry gas shaft seal to maintain loop cover gas inventory. The primary instrumentation on the loop includes temperature, pressure, and loop flow rate measurement. Although techniques for all these measurements have improved, no commercial instrumentation was available for flow and pressure measurement that had been tested under these conditions. Instrumentation was tested and modified to meet both corrosion and temperature requirements. This paper discusses the issues encountered during the design and construction of the ORNL Liquid Salt Loop and should prove useful to those contemplating construction of similar high-temperature liquid-fluoride-salt facilities.

I. INTRODUCTION

A liquid-fluoride-salt loop is being constructed at ORNL to examine the heat transfer inside a heated pebble bed cooled by FLiNaK salt. The experiment simulates cooling of the pebble core region of the Pebble Bed Advanced High-Temperature Reactor (PB-AHTR) that has been proposed by the University of California, Berkeley.[1] The reactor design (shown in Fig. 1) uses Triso fuel imbedded in 3 cm diameter pebbles. The bed of fuel pebbles forms the core of the reactor. The reactor is continuously refueled by inserting and removing pebbles from the bed. Liquid FLiBe salt (a eutectic consisting of 66% LiF and 33% BeF_2) is used to cool the fuel because of its attractive neutronic and thermal properties. FLiBe flows up through the pebble bed, entering at about 600°C and exiting the core with a temperature of 700°C.

The experiment discussed here is designed to quantify the heat transfer in the pebble bed by using prototypic-sized graphite pebbles, flowing salt through them at prototypic velocities and temperatures, but using FLiNaK (a eutectic salt consisting of 46.5% LiF, 11.5% NaF, and 42% KF) as the coolant salt. FLiNaK has thermophysical properties very similar to those of FLiBe and is therefore an excellent simulant for FLiBe; however, it eliminates the safety issues associated with beryllium-containing materials, making testing much less restrictive.

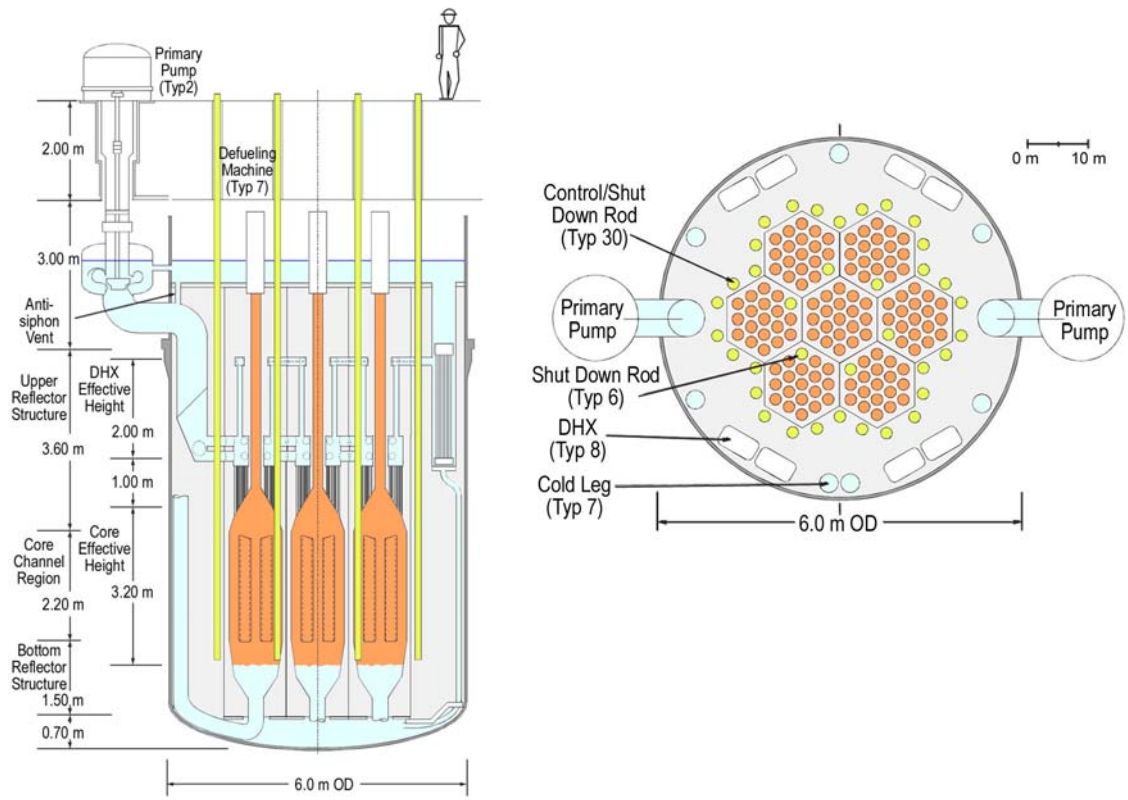

Fig. 1. PB-AHTR concept (drawing taken from Peterson et al., "Design and Development of the Modular PB-AHTR," Proceedings of ICAPP '08).

The loop is constructed of Schedule 40 Inconel 600 piping, with a 2.54 cm inside diameter, and consists of a small circulating pump, a test section made of silicon carbide (SiC) that contains the graphite pebbles, and a forced convection cooler to remove heat. Heat is supplied to the test section using a 200 kW inductive heater that selectively heats the graphite pebbles without significantly heating either the salt or SiC test section. A rendering of the loop is presented in Fig. 2. The loop is capable of operating at 700°C and circulating 4.5kg/s of FLiNaK coolant. The graphite pebbles are heated using a unique inductive heating technique that heats the pebbles volumetrically, simulating the heat generation inside the fuel pebbles of the PB-AHTR. By selecting SiC as the test section flow tube material (the tube that holds the pebble bed) and selecting an appropriate frequency for the inductive heating power supply (30 kHz), graphite can be chosen as the susceptor material and used to simulate the fuel pebbles. A more detailed description of the loop itself can be found in reference 2.

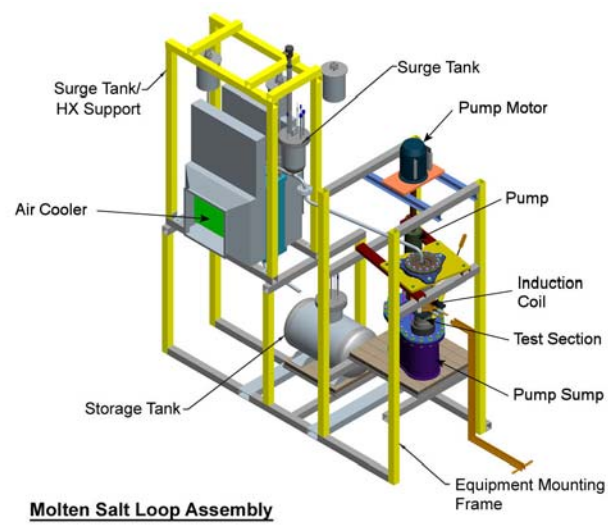

Fig. 2. Loop isometric.

II. MATERIALS OF CONSTRUCTION

An extremely large amount of materials development was undertaken during the 1960s and 1970s as part of the Molten Salt Reactor Program to develop a material compatible with fluoride salts and ASME Code qualified up to 704°C. The material, INOR-8, was used as the containment material for the Molten Salt Reactor Experiment (MSRE) because of its corrosion resistance to

fluoride salt and its attractive neutronic properties. This material was later commercialized by what is now Haynes International and called Hastelloy®-N. Hastelloy®-N is a nickel-molybdenum alloy with low chromium content, improving its corrosion resistance to fluoride salts. These salts tend to deplete the chromium in the metal, which significantly decreases material integrity. Hastelloy®-N remains a commercial product but is not readily available in forms applicable to construction of an experimental loop. The purchase of mill run quantities of the alloy is necessary to obtain forms such as plate, piping, etc. The associated costs for mill run quantities were prohibitively high for use in this project. A material very similar to Hastelloy®-N has been experimentally produced by SKODA Nuclear Machinery Company and tested in a liquid-fluoride-salt environment.[3] A comparison of Hastelloy®-N and MONICR compositions is presented in Table I, showing that these materials are essentially equivalent. Corrosion testing in fluoride salts produces similar results. However, because MONICR was produced only in experimental quantities, it was also not readily available for loop construction. The project then evaluated additional candidate structural materials. Ultimately, Alloy 600 (Inconel 600) was chosen as a relatively common high-temperature nickel alloy with relatively low chromium content (~14–17%) that would provide a sufficient lifetime for the experiment. Although this material is much more common than Hastelloy®-N or MONICR, there was still much difficulty finding specific forms of this alloy during both the estimating and construction portions of this project.

Table I

Hastelloy®-N, MONICR and Inconel® 600 Chemical Compositions (%)

Material	Nickel	Chromium	Molybdenum	Iron	Silicon	Manganese	Carbon
Hastelloy®-N	71	7	16	5	1	0.8	0.08
MONICR	72.7	6.3	17.8	2.8	0.05		0.02
Inconel® 600	72	17		10	0.5	1	0.1

Graphite was also used as a structural component for the MSRE. At that time, a specific graphite was developed that had low porosity and low permeability to the salt and also displayed the desirable neutronic characteristics. Grade DGB graphite was designed specifically for molten salt reactors and was first made in commercial quantities for the MSRE. Graphite designs have advanced significantly since the 1960s, and a variety of graphite is available that shows the appropriate low permeability and compatibility with fluoride salts. For this experiment, POCO Graphite AXF-5Q was chosen for the fuel pebble simulators.

Finally, the test section flow tube needed to be compatible with the salt at operating temperature, needed to be “transparent” to the inductive field, and needed to provide a salt boundary. Two material options were considered: graphite and SiC, both of which were known to be compatible with the salt. The flow tube is a cylinder approximately 106 cm long with an inside diameter of 15 cm that holds the pebble bed and serves as the FLiNaK salt flow boundary. Additionally, the flow tube must be connected to the remainder of the loop that is constructed of Inconel® 600. At the outlet end of the flow tube, a bolted flange is used, while at the inlet, a slip-ring-type joint is incorporated (additional discussion on joints can be found in Sect. VII).

Analysis of the inductive heating system indicated that either SiC or graphite could be made essentially “transparent” to the inductive heating field, although the inductive heating system operating frequency would need to be significantly higher for the SiC flow tube design. More importantly however, the design of the pebbles themselves would be significantly more complicated if a graphite flow tube were selected. If a graphite flow tube were used, a metallic susceptor material would need to be imbedded in the pebbles in order to get significant heat generation. The operating frequency of the induction power supply would need to be selected so that graphite would not act as a significant susceptor in order to prevent significant heat generation in the flow tube itself. Selection of graphite for the flow tube therefore posed problems because the pebbles would have to be split, the metal susceptor installed, and then the pebbles resealed in order to prevent salt from getting into the pebbles, freezing when the loop was cooled down, and potentially breaking the pebbles when they are reheated because the salt expands when it melts. Additional considerations included issues of maintaining good thermal contact at the metal susceptor and graphite interface, and thermal expansion differences between the two materials.

A graphite flow tube could easily be fabricated using simple machining steps; however, it was uncertain if SiC forms could be constructed with sufficient scale and include the structural detail that would be needed. Several potential SiC vendors were contacted, and Saint Gobain believed they could work with us to develop the flow tube design using SiC. Both graphite and SiC are brittle; however, SiC has more strength than graphite. Ultimately it was decided to use a SiC flow tube, mainly because of the complications that would arise by incorporating the metallic susceptor in the graphite pebbles if a graphite flow tube had been chosen. The Hexoloy SA SiC tube that was ultimately fabricated is shown in Fig. 3.

A series of static tests have been performed examining the compatibility of loop materials with FLiNaK salt at

700°C. Testing has included both Inconel® 600 and SiC. Results for 30, 60, and 90 day immersions have indicated that these materials are suitable for long-term use in the convective test loop. The SiC showed no noticeable attack during these tests. The Inconel® 600 showed a corrosion reaction with the FLiNaK salt with an affected depth of approximately 250 μm for the 90 day test. Figure 4 shows an Inconel® specimen after a 90 day exposure. Based on this data, it has been determined that the lifetime of a test loop constructed of Inconel 600 will be sufficient for this project.

Fig. 3. SiC flow tube with flanged end facing front.

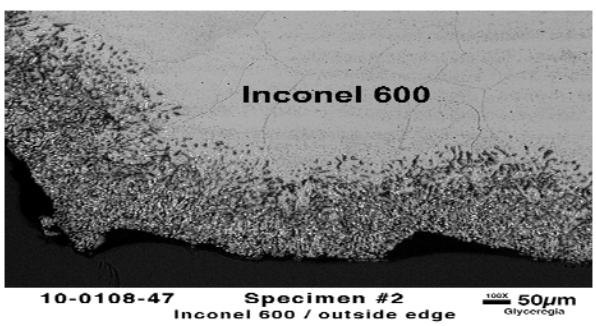

Fig. 4. Inconel specimen after 90 day exposure to 700°C FLiNaK salt.

III. PUMP

The pebble Reynolds number in the core of the PB-AHTR is approximately 3000. It was decided that the loop baseline design would be such that the loop could produce approximately the same pebble Reynolds number. The diameter of the flow channel in the PB-AHTR is 19.8 cm, allowing a maximum of six 3 cm diameter pebbles across the bed. This geometric configuration has a non-uniform liquid fraction all the way across the flow channel (the channel would have to be larger, or the pebbles smaller, in order to have a region in the center of the bed that has a uniform average liquid fraction). Because the liquid fraction varies across the diameter anyway, and in order to keep the size of the experimental facility reasonable, it was decided to use a test section flow tube of 15 cm internal diameter (five pebbles across). The combination of these two factors (desired pebble Reynolds number and flow tube diameter) established a required flow rate of 4.5 kg/s of salt. Additionally the loop design, using 2.54 cm diameter schedule 40 pipe along with the other component designs, required a pressure rise through the pump of 0.125 MPa.

Several vendors were contacted regarding construction of a pump with the capabilities discussed above. All of the vendors who responded proposed using an overhung shaft sump-type pump, which we incorporated in our design. The loop includes a pump sump tank that has sufficient capacity to store all of the loop FLiNaK inventory. The pump sump volume is approximately 30% larger than the loop salt volume, allowing an inert cover gas volume above the salt. In order to fill the loop, this cover gas is pressurized, pushing the salt into the upper elevations of the loop and ultimately into the surge tank. During operation, the liquid head at the bottom of the pump sump tank is approximately 3.5 m or 0.08 MPa. This requires a rotating seal on the pump shaft that can maintain a gas seal between the argon cover gas in the sump and atmosphere. Additionally, the pump must be able to operate at the system temperature of 700°C, and the pump salt contacting components be constructed of Inconel® 600.

Three vendors proposed pump designs. The estimated cost estimates ranged from $10,000 (US) to $150,000 (US). The lowest cost vendor did not include a rotating shaft seal, so this design could not be used as proposed; however, this vendor had a very simple and robust volute/impeller design. The other two vendors proposed pump designs with rotating seals that would meet project requirements but were significantly more expensive. In their designs, the rotating pump seals proved to be a major cost driver, along with significantly more sophisticated volute/impeller designs. None of the vendors routinely built pumps from Alloy 600. Because of the cost differential, it was decided to work with the low-cost vendor and design the pump and shaft to accept a commercially available rotating seal. A Crane 2800E seal was ultimately selected because of its attractive leak rate specification. This seal has very tight tolerance requirements (shaft run out, shaft end play, etc.), and therefore the pump shaft and bearing specifications were critical. Figure 5 shows the Crane seal. ORNL worked with the pump vendor to modify their pump design to accommodate the Crane seal. A final pump design was selected that used a 2 in. diameter Inconel® 600 shaft and a 7.5 kW, 3400 rpm drive motor. The fabricated Inconel® 600 pump volute and impeller is shown in Fig. 6.

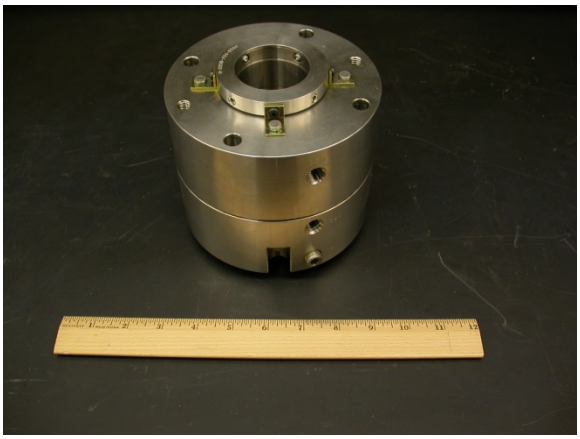

Fig. 5. John Crane rotating pump shaft seal.

Fig. 6. Alloy 600 pump volute and impeller.

IV. GAS SEALS AND OVERPRESSURE SYSTEM

Three vessels in the loop (Fig. 2) are designed to operate with an inert gas above the vessel salt level. The surge tank and the pump sump tank will both operate at loop temperature (700°C), while the storage tank must be able to accommodate temperatures up to about 650°C. Each of these tanks has flanges at the top that allow access to the tank internals. Each tank also has to accommodate pressures somewhat above atmospheric. All of the tank seals must prevent air ingress. This is accomplished by always maintaining tank pressures above atmospheric. The storage tank is used for long-term storage of the salt, either in the liquid or solid state. It is designed to transfer the salt to the loop pump sump tank before loop operation and has a dip tube that extends to within about 0.8 cm of the tank bottom. When the salt is to be transferred, it is melted in the storage tank and the storage tank cover gas is pressurized sufficiently to transfer it into the pump sump tank. This requires a pressure differential between the storage and pump sump tank of approximately 0.02 MPa. Once the salt is in the pump sump tank, the loop is filled by over pressurizing the sump sufficiently to raise the salt level into the surge tank. This requires a pressure differential between the pump sump and the surge tank of approximately 0.08 MPa. Once the loop is filled, the surge tank itself will operate at about 0.03 MPa overpressure.

Each of the three tanks must maintain a gas seal at the bolted flange(s) while at operating temperature. For the smaller flanges (storage tank and surge tank), CF-type (Conflat®) flanges have been successfully used for low-pressure, high-temperature operation. These flange types are designed for vacuum service but work well under low pressure conditions as well. They do have a tendency to require tightening through repeated heat/cool cycles which is a negative for this seal type. Dead annealed nickel was selected for the sealing ring with CF flanges for both the storage tank and surge tank flange seals. The design of the pump sump tank is such that the entire top of the tank is removable in order to access the pump volute and the transition piping to the test section. The gas seal required in this application has a sealing surface that is significantly longer than those of the other two tanks, and the CF-type seal design is not practical. Two types of seals were therefore considered for this application: a graphite-based “rope” seal and a C-shaped static metal seal. The graphite design was discarded because the graphite rope would be required to have a split where the two ends of the rope met. It therefore had a high probability of leakage. A Parker Hannifin C-shaped ring seal was selected. The C-ring is made of Waspaloy and included an Inconel® 718 spring. The Waspaloy was coated with nickel to allow conformity with the sealing surfaces.

As noted above, a rotating gas seal was also required on the pump shaft. This seal was needed to maintain a pure cover gas over the salt, and to allow pressurization of the sump tank. The design of the pump was such that the seal could be located at a position on the shaft where temperatures were significantly lower than loop operating temperatures. Two types of seals were considered. A conventional fan-type seal was considered because of its cost and relatively relaxed shaft tolerance requirements. This type of seal uses multiple sets of rotating and contacting graphite surfaces along with a buffer gas system to maintain a continuous gas seal. Typically these systems use air as the buffer gas, and buffer gas consumption is not a significant issue; however, in this case, argon has to be employed as the buffer gas to prevent contamination of the loop cover gas. The estimated leakage rate for a fan-type seal sized for the loop pump and operating pressure was approximately 0.1 l/s or over 8000 l/day. This leak rate could not be tolerated, and a second more expensive option was investigated. Aerodynamic-type rotating seals have been developed over the last several decades, first for the aircraft industry and then for use in more industrial equipment. These seals rely on aerodynamic forces to separate two spring loaded disks once the shaft being sealed reaches a specific rpm. These disks are separated by only a few hundreds of microns and form a very low leak rate seal. For this application, the Crane 2800E seal had an estimated buffer gas consumption of 0.005 l/s or 400 l/day, which was determined to be acceptable. However shaft tolerance requirements on this type of seal are very tight,

and shaft and bearing fabrication and selection were critical to maintaining the seal manufacturer's tolerance specifications.

The SiC flow tube was designed such that the inlet to the tube was located inside the pump sump tank and below the operating salt level. This allowed the transition from the Inconel® 600 pump discharge piping to the SiC test section to be an imperfect seal (i.e., it allowed some salt leakage) as the loop design required it to accommodate the thermal expansion differential between the SiC test section flow tube and the Inconel® 600 piping. This design required a gas seal between the SiC flow tube and the pump sump tank top flange. Because the bottom of the pump sump tank was fixed to the loop support structure and the top of the SiC flow tube was fixed to the same structure in order to minimize stresses on the SiC flow tube, differential thermal expansion had to be accommodated in this seal. An expansion ring design was chosen to make this seal. Additional discussion of this seal is presented in Sect.VII.

V. INDUCTIVE HEATING SYSTEM

An induction heating system was constructed using a solenoidal coil, as shown in Fig. 7. The magnetic field generated by the coil extends through the SiC flow channel where the graphite pebbles are located. The solid graphite pebbles act as susceptors for the induction field generated by the coil. Because the SiC and salt are much less conductive than the pebbles, the magnetic field generated by the coils will penetrate through the flow tube and FLiNaK coolant and produce an almost uniform radial flux density. A 30 kHz induction field was selected to minimize skin-effect heating in the salt and SiC flow tube. The thickness of the susceptor is designed to be significantly larger than the field penetration depths, producing pebble surface heat fluxes equivalent to the actual fuel pebble.

Fig. 7. Induction heating coil undergoing testing using 3 cm graphite rods contained in a quartz beaker (red glow is from graphite rods at temperature).

The coils are sized and spaced to produce the field density necessary for heating approximately 24 cm of the pebble bed. A 200 kW induction heating power supply supplied by American Induction LLC (Fig. 8) is used to provide current to the coils at the resonant frequency of the coil-capacitor combination. The induction coils also are heated by current from I^2R effects and are water cooled.

Fig. 8. American Induction LLC power supply (200 kW).

As shown in Fig. 3, the experiment flow channel is made of SiC. Unlike the actual reactor system, the channel must be electrically and thermally insulating. High-temperature insulation is placed between the SiC flow tube and the liquid-cooled induction coil (not shown in the figure).

VI. SALT SEALS

There are three seals in the loop that must seal against FLiNaK salt at loop operating temperature. The first is the transition between the pump outlet piping, made of Inconel® 600, and the SiC flow tube. This transition is actually a "leaky seal" and provides a mechanism for accommodating differential thermal expansion between the Inconel® 600 piping and the SiC flow tube. This joint consists of a cylindrical transition piece made of Inconel® 600 that fits inside the entrance of the flow tube. The design is such that there is a gap between the outside diameter of the metal transition piece and the inside diameter of the SiC. Because of the differences in thermal expansion coefficient, this gap decreases as the temperature of the salt and loop increase. At full operating temperature, it is expected that approximately 0.4 l/s of salt

will "leak" out of the gap between the transition piece and the flow tube. This is approximately 10% of the total pump flow. This was deemed acceptable in the design because instrumentation is available to measure actual loop flow.

The second seal is located in the piping between the test section and heat exchanger. Because the top flange of the test section is fixed in location by the loop framework, the piping was flanged and designed to "rotate" so that adjustments could be made to horizontal angle of the piping. Several seal designs were considered, but the final design chosen uses a spiral-wound-type seal with alternating layers of nickel and grafoil. The specific seal chosen is manufactured by Flexitallic. Because the grafoil oxidizes at loop operating temperatures, a gas buffer is required on the external side of the Flexitallic gasket. In order to provide this inert gas buffer, a second C-ring-type seal surrounds the Flexitallic gasket. The buffer gas is provided between the two seals through holes in the flanges and the loop argon supply system.

The third salt seal is located at the top of the SiC flow tube. This seal also uses a bolted flange design to connect the SiC flow tube to the test section outlet piping. A flange cast integral with the SiC flow tube is sandwiched between an Inconel® 600 flange welded to the outlet piping and an Inconel® 718 backing plate, which also serves to mount the top of the test section to the support framework. The seal is similar in design to the rotating seal described above. It consists of an inner Flexitallic grafoil/nickel spiral-wound gasket and an outer Parker C–type seal separated by a buffer gas. The Flexitallic gasket has specific roughness requirements for the flanges in order to properly seal (~3 μm). As-fired SiC typically has a surface roughness less than this, so machining of the green flow tube was performed to achieve an appropriate roughness.

VII. INCONEL® 600 AND SIC INTERFACE

The bottom of the pump sump tank is pinned to the support frame along the centerline of the test section, while the SiC flow tube is pinned at the top flange. The top of the pump sump and the SiC flow tube must therefore be able to move relative to each other. The seal between the SiC flow tube that makes up the test section and the top of the pump sump tank is made using a series of three expansion rings that allow the test section to move both axially and diametrically in relationship to the top of the pump sump tank. Figure 9 shows the housing for these rings that is welded to the pump sump top flange. Precision Rings Incorporated, a manufacturer of piston and seal rings, supplied these rings and specified all of the ring housing geometry, as well as the roughness requirements for the SiC tube at the seal location (0.025–0.4 μm). The expansion rings are shown in Fig. 10.

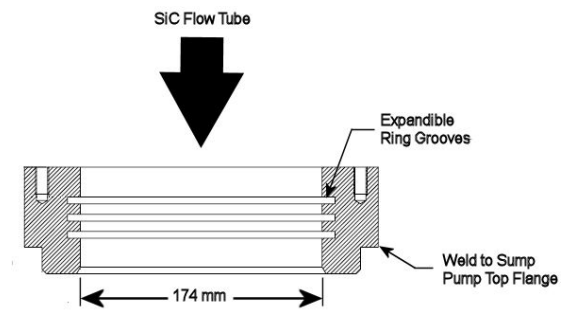

Fig. 9. "Piston-type" ring housing.

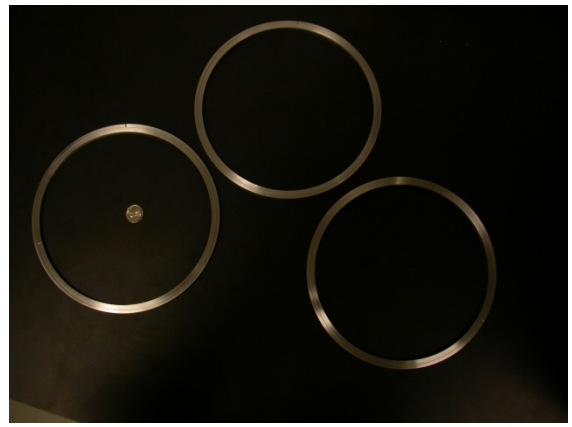

Fig. 10. Piston-type expandable rings used to seal between the SiC flow tube and the top of the pump sump tank.

The joint at the top of the SiC flow tube is shown in Fig. 11. It consists of an Inconel® 600 flange that is welded to the test section outlet piping, the SiC flange that is integral with the flow tube, and an Inconel® 718 backing plate. A finite-element structural analysis was performed on the flange/joint structure. Because the SiC material is brittle, the Flexitallic gasket has a significant load requirement, and the joint must operate from room temperature up to 700°C. This analysis suggested design features that included using Inconel® 718 bolting to better match the required differential thermal expansion of the joint and increase the high-temperature load-bearing capacity. Additionally, it was decided to use Belleville-type washers on the bolting that were also made of Inconel® 718 in order to accommodate any differences in thermal expansion while maintaining an acceptable load on the sealing surfaces.

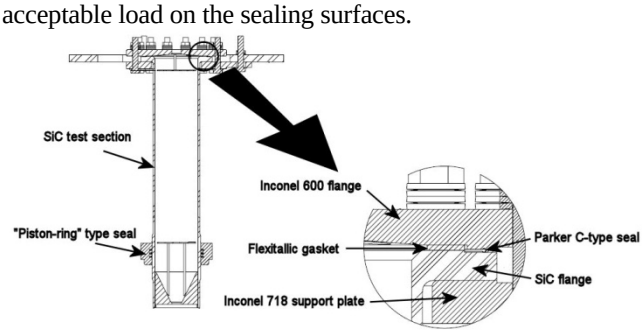

Fig. 11. SiC-to-Inconel 600 seal system.

VIII. INSTRUMENTATION

Four major measurements are used in the loop design: temperature, FLiNaK flow rate, pressure, and salt level. The simplest of these is temperature, and conventional type-N thermocouples are used in this system. Thermocouples sheathed with nickel are used where salt may come in contact with the thermocouple sheath. This includes direct salt temperature measurement at both the inlet and outlet of the test section, and thermocouples that are imbedded in the graphite pebbles to measure pebble temperature. Pebble thermocouples are inserted into the pebbles via a hole drilled to the center of the pebble.

Two types of level measurement are used in the loop. The storage, pump sump, and surge tanks all have heated thermocouple arrays that are used to measure discrete levels within the tanks. These level indicators have heaters internal to the sheath and thermocouples located at discrete locations along the axial length of the level probe. They rely on the difference in heat transfer between the region of the probe submerged in the salt and that in the argon cover gas to indicate where the level is located. A second probe without a heater is also located within each tank with thermocouples at the same axial locations as the ones in the heated probe in order to compensate for variations in gas and salt temperatures. A microwave radar-type level probe manufactured by Ohmart/Vega is used in the surge tank in order to provide a continuous level measurement.

Both pressure and flow measurement systems compatible with fluoride salts at 700°C were difficult to identify and locate. An ultrasonic flowmeter supplied by FLEXIM Corporation was modified by the manufacturer to accommodate the 700°C operating temperatures. This required testing and selecting wave guide configurations that would allow sufficient temperature gradients to protect the system electronics from the loop operating temperatures. This device is capable of measuring flow rates up to 4.5 l/s and as low as approximately 0.45 l/s.

Pressure transmitters compatible with the salt at 700°C were also not commercially available. GP:50 agreed to modify an existing transducer design that uses a NaK intermediate fluid to transition from loop temperature to a temperature acceptable to their electronics. The loop design places this instrument at the pump discharge, just before the test section.

IX. CONTROL SYSTEM

The ORNL Liquid Salt Loop must operate safely within its design parameters and be adjustable to fulfill its experimental function. The control system applies power to heating elements to bring the tanks and loops to operating temperature. This melts the salt in the storage tank. Argon pressure is controlled to transfer salt into the sump tank and fill the loop and upper surge tank. Levels are monitored and pressures adjusted to maintain these levels. Variable-speed drive motor controllers adjust the speed of the sump pump to control salt flow through the loop and adjust the air flow through the heat exchanger to match the heat input from the induction heater. The induction heater has a small Programmable Logic Controller (PLC) that monitors its operating conditions, responds to faults, and controls power out in response to input from the main loop controller. The main controller is an Allen Bradley PLC programmed with ladder logic and sequential function blocks. This controller monitors loop system safety every scan and uses appropriate logic or proportional-integral-derivative (PID) control for various functions. An Allen-Bradley Flex-IO unit reads all of the thermocouples and communicates with the main controller via ethernet. The Human Machine Interface (HMI) (display) uses RSView[4] on a laptop and communicates via ethernet.

X. CONCLUSIONS

ORNL is completing construction of a liquid-fluoride-salt loop that will be used to simulate the heat transfer inside the pebble bed of the PB-AHTR reactor. Several engineering issues were encountered during the design phase because of the unique features of this loop. These issues have included (1) incorporation of a unique inductive heating technique to supply prototypical heating to a pebble bed and the resulting use of SiC as a integral component in the loop, (2) sealing of this component to the remainder of the Inconel® 600 piping, (3) developing both gas and salt seals compatible with the salt and the 700°C operating temperature, and (4) finding components and instrumentation capable of operating in this environment, as well as others. Designs that overcome these problems have been implemented in the loop, which is scheduled to be operational in the late spring or summer of 2011.

REFERENCES

1. P. BARDET et al., “Design, Analysis and Development of the Modular PB-AHTR,” Proceedings of ICAPP ’08, Anaheim, California, June 8–12, 2008.
2. G. L. YODER et al., “Development of a Forced-Convection Liquid-Fluoride-Salt Test Loop,” Proceedings of HTR-10, Prague, Czech Republic, October 18–20, 2010.
3. J. UHLIR, M. Hron, V. Priman, and Z. Frejtich, “Current Status of CZECH R&D Program in Partitioning and Transmutation,” http://www.torium.se/res/Documents/uhlirfluorination1.pdf
4. Rockwell Automation, http://www.rockwellautomation.com/rockwellsoftware/performance/view32/, 2011.