International Conference on Mathematics and Computational Methods Applied to Nuclear Science and Engineering (M&C 2011)
Rio de Janeiro, RJ, Brazil, May 8-12, 2011, on CD-ROM, Latin American Section (LAS) / American Nuclear Society (ANS)
ISBN 978-85-63688-00-2

MODULAR ORIGEN-S FOR MULTI-PHYSICS CODE SYSTEMS

Gokhan Yesilyurt, Kevin T. Clarno, and Ian C. Gauld
Oak Ridge National Laboratory
Oak Ridge, TN 37831
yesilyurtg@ornl.gov; clarnokt@ornl.gov; gauldi@ornl.gov

Jack Galloway
Los Alamos National Laboratory
Los Alamos, NM 87545
jack@galloways.net

ABSTRACT

The ORIGEN-S code in the SCALE 6.0 nuclear analysis code suite is a well-validated tool to calculate the time-dependent concentrations of nuclides due to isotopic depletion, decay, and transmutation for many systems in a wide range of time scales. Application areas include nuclear reactor and spent fuel storage analyses, burnup credit evaluations, decay heat calculations, and environmental assessments. Although simple to use within the SCALE 6.0 code system, especially with the ORIGEN-ARP graphical user interface, it is generally complex to use as a component within an externally developed code suite because of its tight coupling within the infrastructure of the larger SCALE 6.0 system. The ORIGEN2 code, which has been widely integrated within other simulation suites, is no longer maintained by Oak Ridge National Laboratory (ORNL), has obsolete data, and has a relatively small validation database. Therefore, a modular version of the SCALE/ORIGEN-S code was developed to simplify its integration with other software packages to allow multi-physics nuclear code systems to easily incorporate the well-validated isotopic depletion, decay, and transmutation capability to perform realistic nuclear reactor and fuel simulations. SCALE/ORIGEN-S was extensively restructured to develop a modular version that allows direct access to the matrix solvers embedded in the code. Problem initialization and the solver were segregated to provide a simple application program interface and fewer input/output operations for the multi-physics nuclear code systems. Furthermore, new interfaces were implemented to access and modify the ORIGEN-S input variables and nuclear cross-section data through external drivers. Three example drivers were implemented, in the C, C++, and Fortran 90 programming languages, to demonstrate the modular use of the new capability. This modular version of SCALE/ORIGEN-S has been embedded within several multi-physics software development projects at ORNL, including the AMP Nuclear Fuel Performance code and the NESTLE advanced nodal code.

Key Words: Modular ORIGEN-S, SCALE, AMP, NESTLE

1. INTRODUCTION

The Oak Ridge Isotope Generation and Depletion (ORIGEN) code is designed to compute the time-dependent isotopic concentrations during irradiation and decay for the complete set of nuclides that can be produced through nuclear fuel irradiation, neutron activation, and radioactive decay. The ORIGEN-S [1] version is under active development at the Oak Ridge

National Laboratory (ORNL) as the depletion and decay module of the Standardized Computer Analyses for Licensing Evaluation (SCALE) nuclear analysis code suite [2].

The ORIGEN-S code in SCALE 6.0 (SCALE/ORIGEN-S) is a well-validated tool to calculate the time-dependent concentrations of nuclides due to isotopic depletion, decay, and transmutation for many systems in a wide range of time scales. Application areas include nuclear reactor and spent fuel storage analyses, burnup credit evaluations, decay heat calculations, and environmental assessments. Although simple to use within the SCALE 6.0 code system, especially with the ORIGEN Advanced Rapid Processing (ORIGEN-ARP) [3] framework with associated graphical user interface, it is generally complex to use as a component within an externally developed code suite because of its tight coupling within the infrastructure of the larger SCALE 6.0 system. The ORIGEN2 code [4], which has been widely integrated within other simulation suites, is no longer maintained by ORNL, has obsolete data, and has a relatively small validation database. Therefore, a modular version of the ORIGEN-S code was developed to simplify its integration with other software packages. The new version allows multi-physics nuclear code systems to easily incorporate the well-validated isotopic depletion, decay, and transmutation capabilities and to perform realistic nuclear reactor and fuel simulations. SCALE/ORIGEN-S was extensively restructured to develop a modular version that allows direct access to the matrix solvers embedded in the code. Problem initialization and the solver were segregated to provide a simple application program interface (API) and fewer input/output (I/O) operations for the multi-physics nuclear code systems. Furthermore, new interfaces were implemented to access and modify the ORIGEN-S input variables and nuclear cross-section data through external drivers. Three example drivers were implemented, in the C, C++, and Fortran 90 programming languages, to demonstrate the modular use of the new capability. This modular version of SCALE/ORIGEN-S has been embedded within several multi-physics software development projects at ORNL, including the Advanced Multi-Physics (AMP) nuclear fuel performance code [5] and the NESTLE advanced nodal code [6,7].

2. DEVELOPMENT OF THE ORIGEN CODES

The SCALE/ORIGEN-S code solves a set of ordinary differential equations to compute the time-dependent quantity of nuclides that vary due to radioactive decay, isotopic transmutation, and nuclear fission, as shown in Eq. (1).

$$\frac{d\overline{N}(t)}{dt} + \overline{\overline{A}}\,\overline{N}(t) = 0 \quad :: \quad \overline{N}(t) = \overline{N}(0)\exp(-\overline{\overline{A}}t) \tag{1}$$

where $\overline{N}(t)$ is the vector of nuclide number densities at a given time, t; $\overline{\overline{A}} = \overline{\overline{L}} + \overline{\overline{S}}\Phi$; $\overline{\overline{L}}$ is the matrix of decay constants; $\overline{\overline{S}}$ is the matrix of monoenergetic microscopic cross sections; and Φ is the neutron flux. The $\overline{\overline{S}}$ matrix and neutron flux can vary with time, due to changes in the spectrum and isotopic concentrations; therefore, both can be input to SCALE6/ORIGEN.

The accuracy of depletion calculations is determined in large measure by the accuracy and completeness of the nuclear data associated with the transmutation and decay equations. Continuous development and revision of evaluated nuclear decay and cross-section data have

significantly improved the accuracy of depletion and decay codes. ORNL developed ORIGEN2 as a stand-alone, easy-to-use code with one-group cross-section libraries generated using reactor physics codes for a range of reactor types. However, ORIGEN2 is no longer supported, and most of the nuclear data are obsolete. As fuel designs and reactor fuel management schemes have advanced and the cross-section data have become out of date, the libraries in ORIGEN2 are no longer widely applicable. Consequently, ORIGEN2 is not recommended for use without first completely regenerating the nuclear data libraries used by the code.

Advanced fuel depletion code systems generally involve coupling between lattice physics transport methods that solve for the neutron flux spectrum and generate problem-dependent cross sections and depletion methods that simulate the time-dependent isotopic evolution. Whether this is done in one integrated code or as several modular codes, the functional requirements are largely the same: neutron transport (or diffusion) codes generate accurate problem-dependent cross sections for use in the depletion calculation, and the nuclide concentrations from the depletion calculation are applied in the transport (or diffusion) calculation in order to reflect the time-dependent composition changes associated with irradiation.

The numerical methods used in SCALE/ORIGEN-S solve for arbitrary matrix element coupling using a hybrid approach that combines the matrix exponential method with Bateman equations for short-lived nuclides to obtain stable numerical solutions for all nuclides. The method allows for cyclical transition feedback, eliminating the need of analytical methods to use linearized chains. The numerical methods used in SCALE/ORIGEN-S have been benchmarked against other analytical and numerical solvers in a computational methods benchmark developed by the Organization for Economic Cooperation and Development Nuclear Energy Agency [8]. The results of the benchmark study verified that the matrix exponential solutions are in good agreement with other numerical and analytic solutions.

SCALE/ORIGEN-S can be executed to solve in a single time step or to utilize a set of subcycles within a time step to more accurately compute the nuclide concentrations at the end of the time step. Because the isotopic concentrations can change within a time step, the power would change over time when a constant neutron flux is used. In the SCALE 6.0 code system, the SCALE6/COUPLE code [9] is used to create the monoenergetic $\overline{\overline{S}}$ matrix using a multigroup neutron flux from a transport calculation and multigroup cross sections, both from a SCALE6/AMPX library [10] (which consists of those on the Evaluated Nuclear Data File [ENDF]-B/VII database) and data for additional nuclides from other databases.

The nuclear data used by SCALE/ORIGEN-S have been updated to state-of-the-art nuclear decay data evaluations, neutron cross sections, and fission product yields.

- Nuclear decay data are developed from ENDF/B-VII to include 904 activation products, 174 actinides, and 1149 fission products.
- Multigroup cross sections are developed from the Joint Evaluation Fission and Fusion (JEFF) 3.1/A activation library, itself based on the ENDF-6 formatted European Activation File 2003. The JEFF library contains neutron cross-section data for 774 target nuclei, including ground and metastable isomeric states, and 12,617 neutron-induced reactions below 20 MeV. The following neutron reaction types are included: (n,n′), (n,2n), (n,3n), (n,f), (n,n′α), (n,2nα), (n,3nα), (n,n′p), (n,n2α), (n,n′d), (n,n′t), (n,n′h), (n,4n), (n,2np), (n,γ), (n,p), (n,d),

(n,t), (n,h), (n,α), (n,2α), (n,2p), and (n,pα). The cross sections are provided in a multigroup format (238, 200, 44, and 49 groups).

- Fission product yields are included for 30 actinides with neutron-induced fission yields in ENDF/B–VII, including ^{227,228,232}Th, ^{231}Pa, $^{232\text{-}238}$U, ^{237,238}Np, $^{238\text{-}242}$Pu, ^{241,242m,243}Am, $^{242\text{-}246,248}$Cm, ^{249,252}Cf, and ^{254}Es. The fission yield library includes yields for all tabulated incident neutron energies: thermal, fast, and high-energy (14 MeV). The average neutron energy causing fission is calculated automatically, and the fission yields are interpolated using the average neutron fission energy.

3. STRUCTURE OF MODULAR ORIGEN

The modular ORIGEN-S serves as a stand-alone isotopic depletion, decay, and transmutation module for multi-physics code systems, independently of the SCALE 6.0 code system. SCALE/ORIGEN-S was extensively restructured to develop a modular version without interfering with the functionality or accuracy of the actual solvers embedded in SCALE/ORIGEN-S.

Problem initialization and the solver were separated from each other to provide simple API and fewer I/O operations for the multi-physics nuclear code systems. Furthermore, a new set of interfaces was implemented to access and modify all of the SCALE/ORIGEN-S input variables through drivers. In addition, modular ORIGEN-S was designed to run with or without the traditional SCALE-style input file.

Three example drivers were implemented (one each in Fortran 90, C, and C++ programming languages) to demonstrate the usage of the modular ORIGEN-S library. Figure 1 shows the communication between drivers and modular ORIGEN-S library through interface functions.

Accessors are composed of “set” and “get” interface functions. The “set” functions are used to assign the values of input parameters through the driver. The “get” functions are used to access the calculated, or predefined, variables in the modular SCALE/ORIGEN-S library. In the “initialize” function, the input is read from nuclear data files and memory is allocated. After initialization, data used in the “solve” step may be modified at any time with the “set” functions. In the “solve” function, the ordinary differential equation is solved to compute the new nuclide number densities, as shown in Eq. (1) and based on data defined by the initialization and modified through “set” routines. After initialization, “set” functions may be used to redefine the data in the matrices, and the solver may be called many times. The “get” functions allow the user, or driver code, to access data, including the nuclide concentrations, within ORIGEN-S. To simplify the I/O operations and to ensure that it is only performed once, the “initialize” and “solve” routines are completely disconnected. The traditional SCALE/ORIGEN-S output may be completely disabled, delegating the responsibility for writing data to the driver, which has access to all of the requisite information through the “get” accessors.

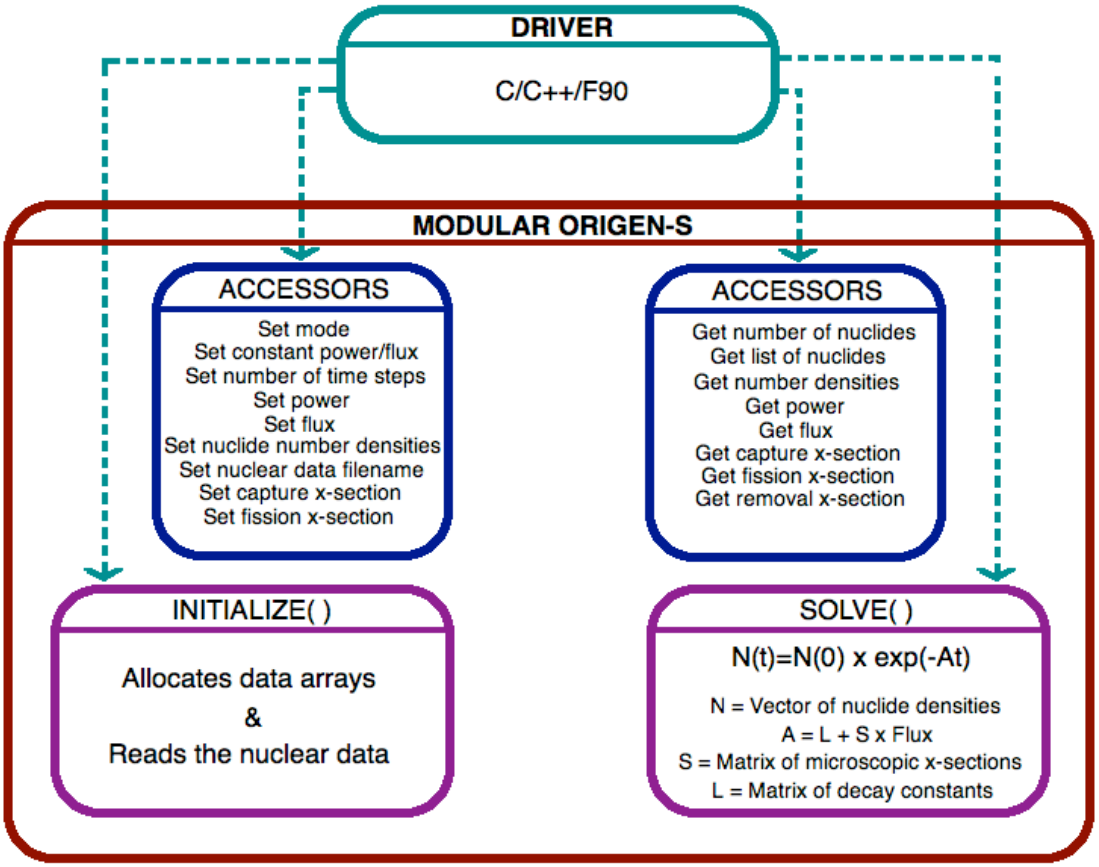

Figure 1. Communication layout between the driver and the modular ORIGEN library.

Table I shows a simplified flow diagram to demonstrate the use of accessors, initializer, and solver through drivers.

In Table I, inner time steps are not different from outer time steps with respect to the solver module. This new structure provides flexibility for the user to analyze different regions for a given outer time step with multiple inner time steps (subcycles), increasing the accuracy of the results. Furthermore, different sets of constant power/flux values can be specified for the subcycles.

The modular ORIGEN-S library was tested extensively with respect to the baseline SCALE/ORIGEN-S, and it is verified that modular ORIGEN-S library produces identical results as SCALE/ORIGEN-S. The modular ORIGEN-S library was integrated into the AMP Nuclear Fuel Performance code and a new version of the NESTLE core simulator that is maintained by ORNL and the University of Tennessee, Knoxville; preliminary results of this integration are presented in the following sections.

TABLE I. A simplified flow diagram for the driver

```
Initialize
LOOP over outer time steps (t):
{
 Set inner time steps for the sub-cycles
 LOOP over material regions (m):
 {
 Set number densities N(t, m, nuclide)
 Set capture cross sections (optional)
 Set fission cross sections (optional)
 Set constant power/flux for the sub-cycles PF(t, m, sub-cycles)
 Solve N(t) = N(0)exp(-At) for all sub-cycles
 Get new number densities N(t, m, nuclide)
 N(t+1, m, nuclide) = N(t, m, nuclide)
 Get updated flux/power (optional)
 Get capture cross sections (optional)
 Get fission cross sections (optional)
 Get removal cross sections (optional)
 }
}
```

4. INTEGRATION WITH THE AMP NUCLEAR FUEL PERFORMANCE CODE

The AMP Nuclear Fuel Performance code is a new three dimensional (3D) thermal-mechanical-chemical code. It is the prototype for a new general-purpose, multiscale nuclear fuel performance capability that is being developed by ORNL and the Los Alamos National Laboratory. An alpha version of AMP was released though the Radiation Safety Information Computational Center in September 2010. The AMP Nuclear Fuel Performance code leverages advanced modeling and simulation tools with empirical material models (both oxide and metal fuel with multiple clad, gap, and coolant materials) and is capable of utilizing high-performance computing hardware. It can currently model 3D nonlinear thermal diffusion, elastic-plastic mechanics, and oxygen transport with densification, swelling, relocation, thermal expansion, and creep with a neutronics preprocessor to define the heat source and isotopic changes with time.

The neutronics preprocessor leverages a user-defined power distribution (in space and time) with the modular ORIGEN-S library to provide a comprehensive, validated assessment of the isotopic/elemental generation rates throughout the life of the fuel. The elemental information is used to define the fission gas generation rate and the transuranics metal depletion rate. In addition, the elemental concentrations are input to a species formation module that minimizes the free energy so that the chemical species that are formed can be determined.

Because the modular ORIGEN-S allows the user to deplete the material with constant power or flux, it is easily applicable to modeling the isotopic changes in fuel as well in cladding. In

addition, the modular ORIGEN-S simplifies the depletion of fuel on a pellet-averaged basis or enables the use of increased spatial fidelity.

4.1. Calculation of Spatial Power/Flux Distribution for Modular ORIGEN-S

In the AMP code, each spatial element consists of a set of gauss points (GPs) in the 3D mesh, which can be defined with a piecewise constant variation in time and a functional definition in space.

The spatial functional can be polynomial-based in the axial dimension (to model power peaking factors), exponential in the radial dimension (based on a predefined functional used by FRAPCON [11], which is originally from TRANSURANUS [12]), and a sinusoidal shape in the azimuthal dimension (to account for assembly features). The exponential functional in the radial dimension (r) is given in Eq. (2).

$$F(r) = 1 + a \times \exp\left[-3 \times (R - r)^{0.45}\right] \tag{2}$$

where R is the outer radius of the fuel pellet and the model constant a is 3.45 for the uranium-based fuel. The empirical FRAPCON shape function $F(r)$ is shown in Fig. 2 as a function of radius r for the various values of fuel pellet outer radius R. The functional power shape is mapped to the GPs, and the isotopic depletion calculations may be performed at each GP for each depletion time step over a given mesh.

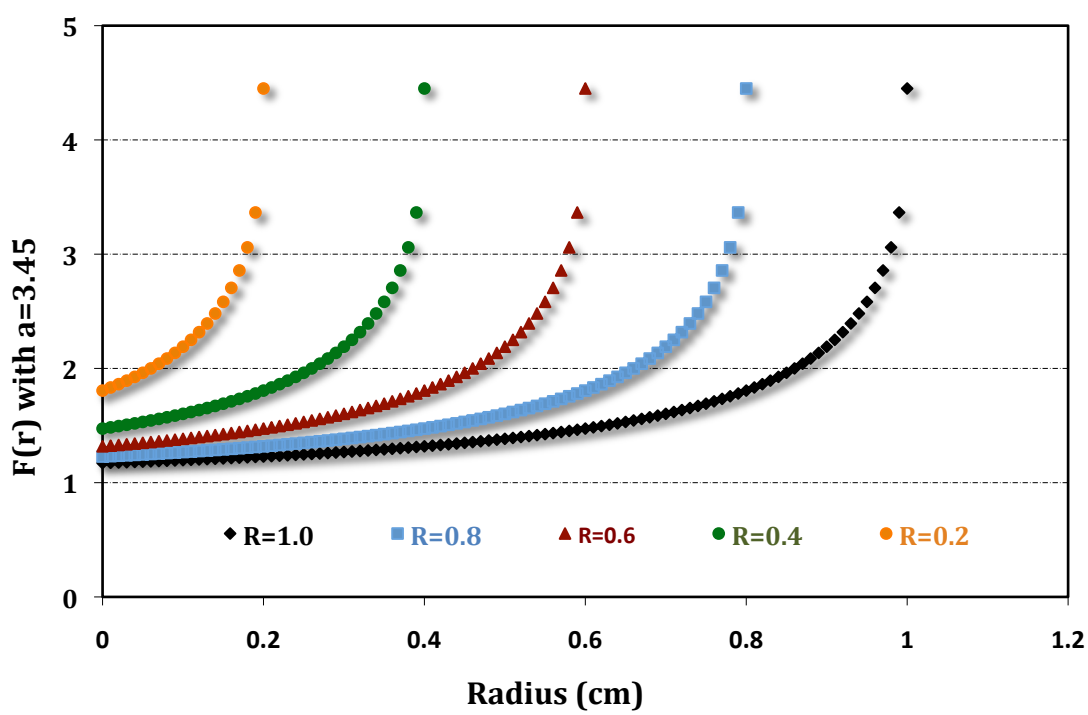

Figure 2. $F(r)$ with a = 3.45 for various values of R.

4.2. Description of the AMP Benchmark Problem

In order to develop the validation benchmark for the AMP code, a FRAPCON (version 3-2) simulation has been updated from the simulation provided in Reference [13]. This simulation matches the results of the FRAPCON simulation presented in the IFA-432 Benchmark and presents a baseline metric for the ability of traditional fuel performance codes to match experimental data from the Halden research reactor. Additional benchmarks will be incorporated in the future for other fuel types and experiments.

The reference power distribution as a function of time is shown in Fig. 3. Total number of piecewise-constant time steps is 38, corresponding to 759 days.

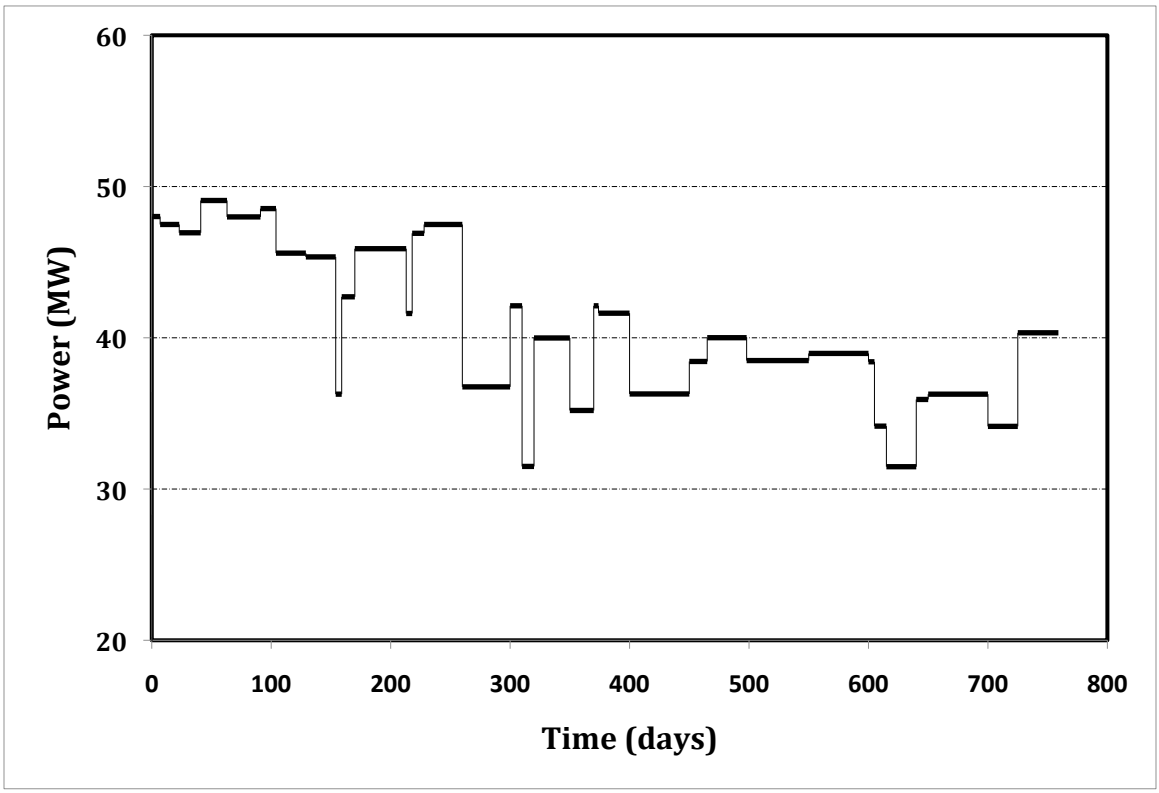

Figure 3. Reference step power distribution as a function of time.

The FRAPCON shape function, given in Eq. (2), was applied to the constant power values for each time step in Fig. 3, providing a spatial power distribution over the GPs in the mesh. The constant power at the last depletion time step was chosen to demonstrate the result of the FRAPCON shape operator. The corresponding constant power and the time step are 40.33 MW and 38, respectively. Figure 4 shows the spatial distribution of the power at the GPs for the last time step.

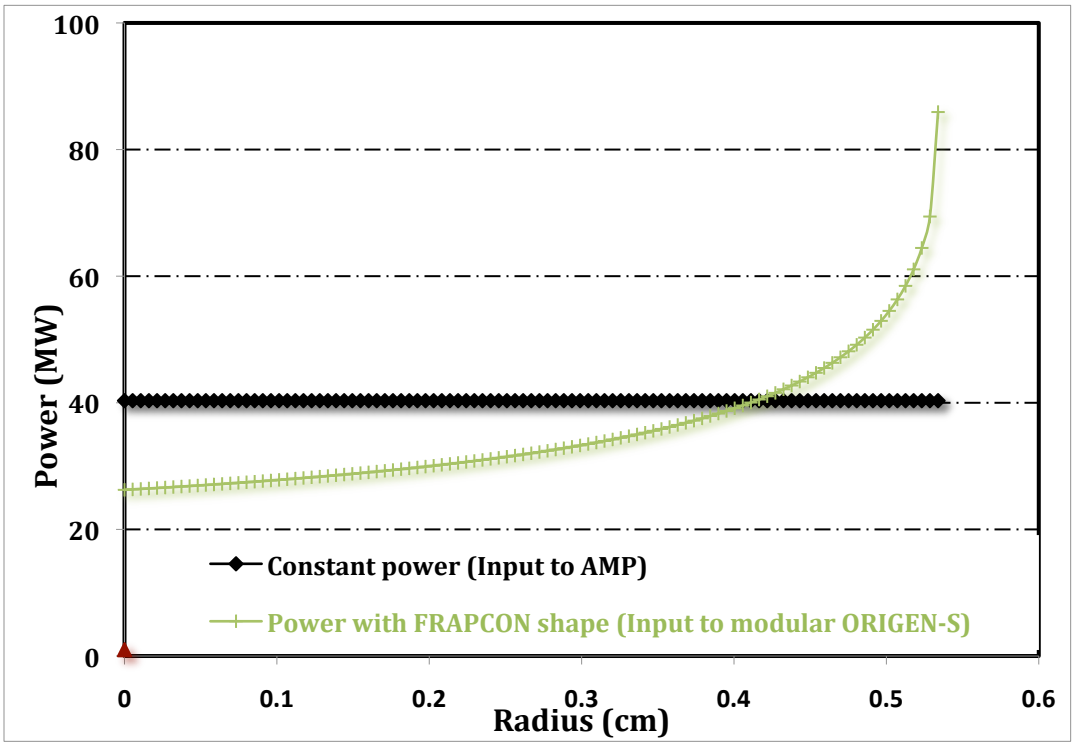

Figure 4. Spatial power distribution for the last time step.

The fuel pellet mesh consists of 5,226 elements and 41,808 GPs. Figure 5 shows the mesh and the 3D plot of the spatial power distribution at the GPs in the fuel pellet at the last time step.

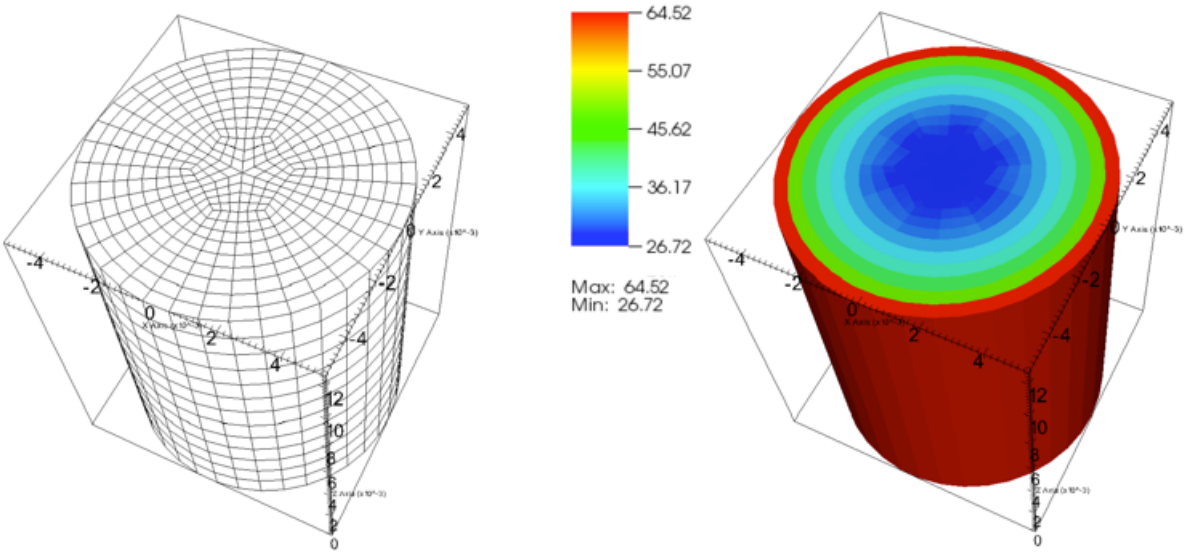

(a) (b)

Figure 5. (a) Mesh. (b) Spatial power distribution for the last time step.

Figure 6 shows the mesh and the 3D plot of the spatial mass distribution of ^{239}Pu at the GPs in the fuel pellet at the last time step. The mass of ^{239}Pu is shown as a function of time in Fig. 7.

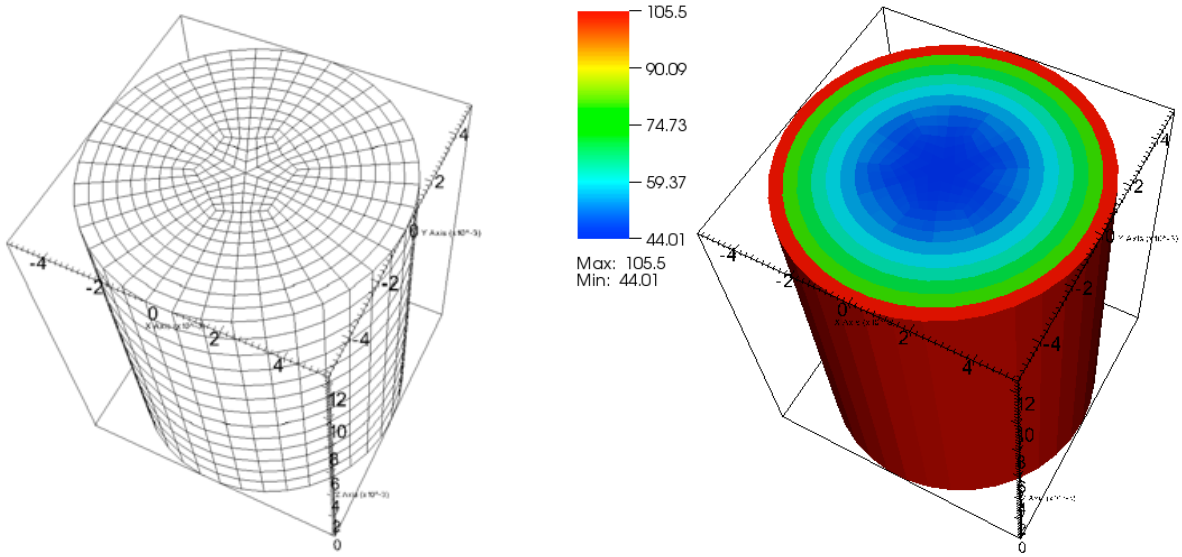

(a) (b)

Figure 6. (a) Mesh. (b) Spatial mass distribution of ^{239}Pu for the last time step.

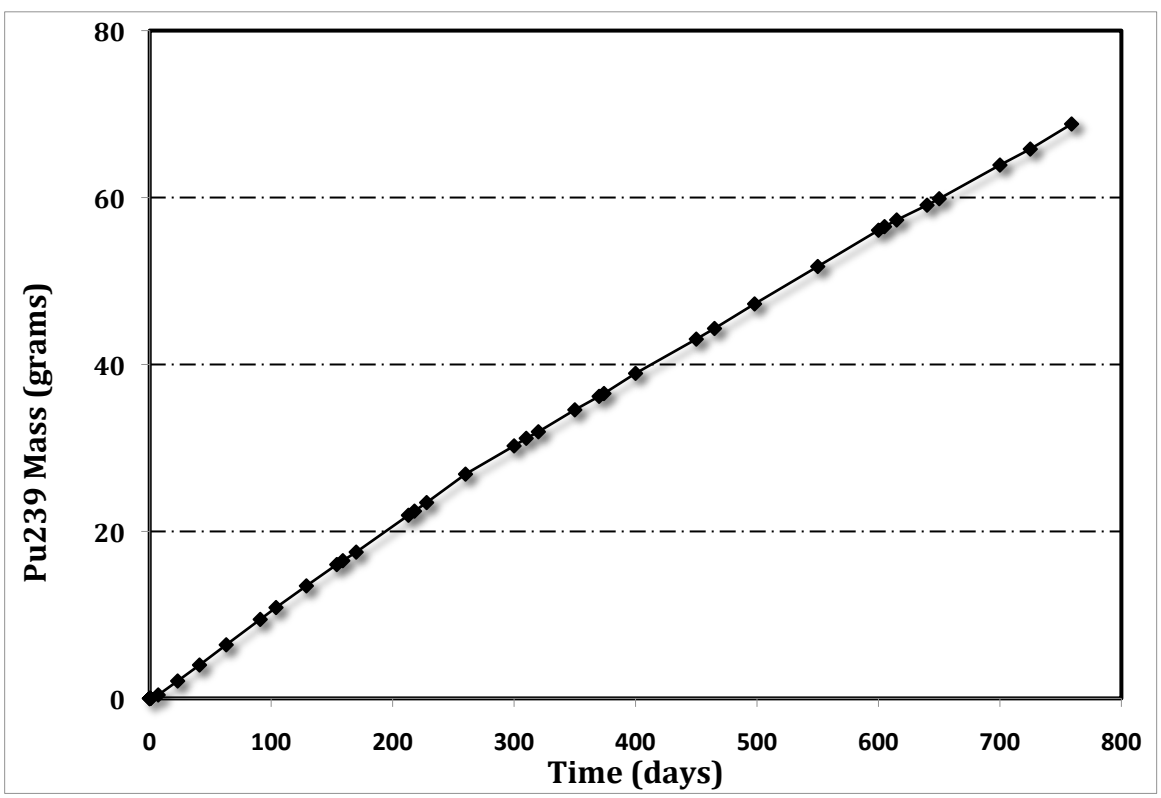

Figure 7. Mass of ^{239}Pu as a function of time.

5. INTEGRATION OF MODULAR ORIGEN WITH NESTLE

NESTLE is a 3D core simulator that utilizes the nodal expansion method for eigenvalue, adjoint, fixed-source steady-state, and transient problems. Recently, the University of Tennessee and ORNL modularized and upgraded NESTLE to model the boiling flow of a boiling-water reactor and incorporated a microscopic depletion capability with the modular ORIGEN-S library.

The SCALE6/TRITON lattice physics sequence [14-16] is used to generate energy-collapsed and spatially homogenized microscopic cross sections for use in NESTLE. The SCALE6/TRITON lattice physics sequence uses the SCALE6/NEWT discrete ordinates transport solver [17] and the SCALE6/ORIGEN code for isotopic tracking. Therefore, there is a consistent approach to modeling the isotopic depletion from lattice physics through core depletion and a clear path toward benchmarking the modular ORIGEN-S library against the widely used and accepted results of the SCALE6/ORIGEN.

Four isotopes were selected as appropriate representations of the accuracy of the ORIGEN-S benchmark. Uranium-235 and ^{239}Pu are the two most reactive fissionable isotopes in reactor fuel and thus serve as excellent checks. As can be seen in Fig. 8, there is essentially no difference in solution between the two versions of ORIGEN-S for the two most important nuclides with respect to reactivity. In addition, ^{241}Am was benchmarked to ensure that the higher actinide chain solution was occurring correctly and is shown to be in excellent agreement. (The right side axis in Fig. 8 is labeled with a significantly smaller scale, corresponding to the number density for ^{241}Am). The last isotope that was used for comparison was ^{137}Cs, one of the most prevalent fission products, to ensure that the correct fission distribution was being calculated, and again it is seen that the agreement is excellent. When performing a check on the relative error with respect to all four isotopes at every state point, the maximum uncertainty observed was less than 0.05%; the vast majority of the data points had uncertainties less than 0.01%.

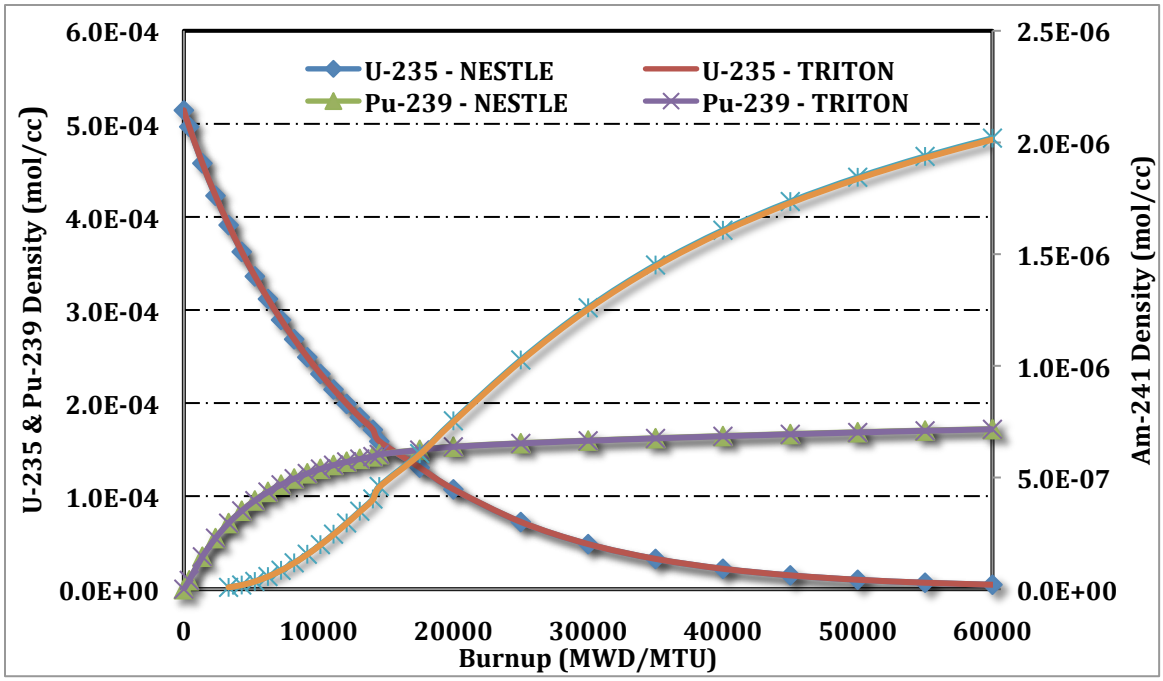

Figure 8. Modular ORIGEN benchmark against ORIGEN.

Most of the input variables to the modular ORIGEN-S library can be calculated internally within NESTLE (e.g., the number of days corresponding to each burnup step or the total power in each node). However, the reaction-dependent microscopic cross sections are obtained as an input from the SCALE6/TRITON calculation and are computed using a linear burnup interpolation scheme; a linear interpolation scheme is used for any other spectral conditions, such as moderator density, fuel temperature, and controlled or uncontrolled conditions. The cross sections from SCALE6/ TRITON are in n-group form, corresponding to the n-group solution performed in SCALE6/ NESTLE; however they must be collapsed to one-group form for calculation within the modular ORIGEN-S library and computed via a flux-weighted collapse. Due to the difference between the n-group nodal flux, versus the n-group fuel flux, disadvantage factors are calculated and then interpolated to obtain the correct cross section. This complication arises because SCALE6/TRITON calculates both a nodal flux and a fuel flux, whereas NESTLE only calculates a nodal flux. Since only fuel depletion is desired, a fuel flux must be used, and the lack of a fuel flux solution in SCALE6/NESTLE is accounted for by computing the disadvantage factors, which are then used for flux-weighted microscopic cross-section collapsing for the modular ORIGEN-S solution. The default input for the modular ORIGEN-S calculation requires the nodal power in units of megawatts, which is internally calculated within NESTLE and passed into the modular ORIGEN-S library. An energy-group collapsing capability was added to NESTLE to perform a function that corresponds to the capability of SCALE/COUPLE.

A NESTLE input was developed that exactly corresponds to a SCALE/TRITON depletion of a single lattice; the SCALE6/NESTLE core model is subject to reflective boundary conditions on all sides; cross sections are defined by from an identical problem modeled in SCALE6/TRITON with identical power assignments. This model ensures that the energy-collapsed mono-energetic

cross sections are identical; thus the subsequent isotopic solution should be identical. This serves as verification that the modular ORIGEN-S library produces exactly the same solution as the SCALE/ORIGEN capability, even within a core diffusion solver, such as NESTLE.

The isotopic distribution throughout the cycle, from 0 to 60,000 MWD/MTHM, was calculated, and the results were compared with the SCALE/ORIGEN-S solution performed within SCALE6/TRITON lattice physics sequence (Fig. 8). With identical problem definitions, the agreement proved excellent, as illustrated with the number density agreement in ^{235}U and ^{239}Pu on the left axis and ^{241}Am on the right axis. Therefore, it has been verified that the isotopic depletion, decay, and transmutation capability that modular ORIGEN-S provides is identical to the capability of the well-validated version of ORIGEN-S in the SCALE nuclear analysis code suite.

6. CONCLUSIONS

The modular ORIGEN-S was developed to serve as a stand-alone isotopic depletion, decay, and transmutation module for the multi-physics code systems while operating independently of the SCALE 6.0 code system. SCALE/ORIGEN-S was extensively restructured to develop the modular version without interfering with the functionality of the actual solvers embedded in the code. Its ease of use and minimization of I/O allows high-fidelity evaluation of isotopic depletion, decay, and transmutation scenarios intended for the assessment of actinide transmutation but fully capable of tracking literally hundreds of isotopes, transuranics, light elements, or fission products.

Modular ORIGEN-S was tested extensively against SCALE6/ORIGEN-S. It was verified that modular ORIGEN-S produces identical results. Modular ORIGEN-S was integrated into the AMP Nuclear Fuel Performance code and NESTLE successfully, and the preliminary results were presented.

Consequently, multi-physics nuclear code systems can easily incorporate the isotopic fuel depletion, decay, and transmutation to perform realistic thermal-hydraulics/neutronic calculations independently of SCALE 6.0 code system.

ACKNOWLEDGMENTS

This research was sponsored by the Laboratory Directed Research and Development Program of Oak Ridge National Laboratory, managed by UT-Battelle, LLC, for the U. S. Department of Energy as well as the Nuclear Energy Advanced Modeling and Simulation (NEAMS) program within the U. S. Department of Energy, Office of Nuclear Energy.

REFERENCES

1. I. C. Gauld, O. W. Hermann, and R. M. Westfall, *ORIGEN Scale System Module to Calculate Fuel Depletion, Actinide Transmutation, Fission Product Buildup and Decay, and Associated Radiation Terms*, ORNL/TM 2005/39, Version 6, Vol. II, Sect. F7, Oak Ridge National Laboratory, Oak Ridge, Tennessee (2009).

2. *SCALE: A Modular Code System for Performing Standardized Computer Analyses for Licensing Evaluations*, ORNL/TM-2005/39, Version 6, Vols. I–III, Oak Ridge National Laboratory, Oak Ridge, Tennessee (2009). Available from Radiation Safety Information Computational Center at Oak Ridge National Laboratory as CCC-750.
3. I. C. Gauld, S. M. Bowman, J. E. Horwedel, *ORIGEN-ARP: Automatic Rapid Processing for Spent Fuel Depletion, Decay, and Source Term Analysis*, ORNL/TM-2005/39, Version 6, Vol. I, Sect. D1, Oak Ridge National Laboratory, Oak Ridge, Tennessee (2009).
4. A. G. Croft, *A User's Manual for the ORIGEN2 Computer Code*, ORNL/TM-7175, Union Carbide Corporation (Nuclear Division), Oak Ridge National Laboratory, Oak Ridge, Tennessee (July 1980).
5. S. Allu, J. Banfield, P. Barai, J. J. Billings, K. T. Clarno, W. K. Cochran, G. A. Dilts, S. Kadioglu, J. H. Lee, G. I. Maldonado, R. Martineau, B. Mihaila, L. Ott, S. Pannala, B. Philip, R. Sampath, S. Simunovic, J. A. Turner, C. Unal, and G. Yesilyurt, "Initial Validation of the AMP Nuclear Fuel Performance Code," Submitted to *Am. Nucl. Soc.* (2010).
6. G. I. Maldonado, J. Galloway, H. Hernandez, K. T. Clarno, E. L. Popov, and M. A. Jessee, "Integration of the NESTLE Core Simulator with SCALE," *Trans. Am. Nucl. Soc.* **100**, 619–20 (2009).
7. P. J. Turinsky, R. M. Al-Chalabi, P. Engrand, H. N. Sarsour, F. X. Faure and W. Guo, "Code Abstract–NESTLE: A Few-Group Neutron Diffusion Equation Solver Utilizing the Nodal Expansion Method for Eigenvalue, Adjoint, Fixed-Source Steady-State and Transient Problems," *Nucl. Sci. & Engr.* **120**, 72 (1995).
8. B. Duchemin and C. Nordborg, *Decay Heat Calculation—An International Nuclear Code Comparison*, NEACRP-319, Nuclear Energy Agency (1989).
9. I. C. Gauld and O. W. Hermann, *COUPLE: Scale System Module to Process Problem-Dependent Cross Sections and Neutron Spectral Data for ORIGEN Analyses*, ORNL/TM 2005/39, Version 6, Vol. II, Sect. F6, Oak Ridge National Laboratory, Oak Ridge, Tennessee (2009).
10. M. E. Dunn and N. M. Greene, "AMPX-2000: A Cross-Section Processing System for Generating Nuclear Data for Criticality Safety Applications," *Trans. Am. Nucl. Soc.* **86**, 118–119 (2002).
11. G. Berna and D. D Lanning, *FRAPCON-3: Integral Assessment*, NUREG/CR-6534, Vol. 3, PNNL-11513, Pacific Northwest National Laboratory, Richland, Washington (1997).
12. A. Schubert, C. Gyori, D. Elenkov, K. Lassmann, and J. Van de Laar, "Analysis of Fuel Centre Temperatures with the TRANSURANUS Code," Bulgarian Academy of Sciences, Wurzburg, Germany (March 2003).
13. M. E. Cunningham, C. E. Beyer, P. G. Medvedev, and G. A. Berna, *FRAPTRAN: A Computer Code for the Transient Analysis of Oxide Fuel Rods*, NUREG/CR-6739, Vol. 1, PNNL-13576, Pacific Northwest National Laboratory, Richland, Washington.
14. M. D. DeHart, *TRITON: A Two-Dimensional Transport and Depletion Module for Characterization of Spent Nuclear Fuel*, ORNL/TM-2005/39, Version 6, Vol. I, Sect. T1, Oak Ridge National Laboratory, Oak Ridge, Tennessee (2009).
15. S. M. Bowman and D.F. Gill, "Validation of SCALE/TRITON 2-D and 3-D Models for LWR Fuel," *Proc. Physor-2006*, Vancouver, British Columbia, Canada, September 10–14 (2006).

16. M. D. Dehart and A. P. Ulses, "Lattice Physics Capabilities of the SCALE Code System Using TRITON," *Proc. PHYSOR-2006*, Vancouver, British Columbia, Canada, September 10–14 (2006).
17. M. D. DeHart, *NEWT: A New Transport Algorithm for Two-Dimensional Discrete Ordinates Analysis in Non-Orthogonal Geometries*, ORNL/TM-2005/39, Version 6, Vol. II, Sect. F21, Oak Ridge National Laboratory, Oak Ridge, Tennessee (2009).