Journal of Nuclear Materials 381 (2008) 119–123

Contents lists available at ScienceDirect

Journal of Nuclear Materials

journal homepage: www.elsevier.com/locate/jnucmat

Preliminary design of a graphite irradiation tensile creep experiment in the target region of the high flux isotope reactor

J.L. McDuffee *, T.D. Burchell, D.W. Heatherly, K.R. Thoms

Oak Ridge National Laboratory, UT-Battelle, Inc., P.O. Box 2008, Oak Ridge, TN 37831, USA

ARTICLE INFO

PACS:
28.52.Fa
28.52.Av

ABSTRACT

Up to four irradiation tensile creep tests are planned for the target region of the high flux isotope reactor on two graphite grades: PCEA and NBG-18. The initial experiment is designed for an irradiation temperature of 600 °C and at fluences between 1×10^{22} n/cm^2 and 1.4×10^{22} n/cm^2 ($E > 50$ keV).

© 2008 Elsevier B.V. All rights reserved.

1. Introduction

HGC-1 is the first of a series of High Flux Isotope Reactor (HFIR) irradiation creep capsules being designed to provide graphite irradiation tensile creep data for NGNP relevant graphites. The purpose of the HFIR Graphite Creep-1 (HGC-1) capsule is to provide design data on the effects of irradiation on NGNP relevant graphites over the neutron dose range of 1.0×10^{22} n/cm^2–1.4×10^{22} n/cm^2 [$E > 50$ keV] or 6.8–9.5 dpa at an irradiation temperature of 600 °C. Additional HFIR capsules are planned for irradiations at 600 and 900 °C to provide design data over the anticipated graphite in-reactor operating temperature and dose range. The data to be obtained from this irradiation capsule includes:

- Irradiation creep design data and data on the effects of irradiation creep (tensile) on key physical properties [strength, elastic modulus, coefficient of thermal expansion (CTE)]
- Data on the single-crystal irradiation behavior of graphites to be derived from HOPG.

The HGC-1 irradiation capsule will contain two pneumatic bellows that apply a controlled load to each chain of graphite creep samples accommodated in two separate channels in the capsule. A single tensile stress level of 5 MPa (725 psi) will be utilized in HGC-1. This stress level was chosen based on: (i) historic norms (5 MPa was used in the High Flux Reactor (HFR) Petten series of tensile irradiation creep experiments performed in the 1980s and 1990s [1]) and (ii) detailed discussions with reactor vendors via the American Society of Mechanical Engineers (ASME) graphite core design project team. In addition, the two adjacent channels in HGC-1 contain companion unstressed graphite specimens. The apparent irradiation creep strain may thus be determined from the difference in the dimensional changes between a stressed and unstressed sample irradiated at the same temperature and to the same neutron damage dose. In addition to the unstressed creep control samples, each unstressed channel contains a number of smaller 'piggyback' samples. These piggyback specimens do not provide irradiation creep data, but do provide valuable physical properties data.

2. Specimens

The graphite grades to be included in the HGC-1 capsule can be categorized as follows:

Major grades. These graphites are reactor vendor's candidates for the core structures of NGNP, and include NBG-18 and PCEA as well as a historical (reference) grade (H-451). These grades are most likely to receive reasonably large neutron doses in their lifetime and will be subjected to significant stresses in operation. Consequently, these grades occupy the stressed and companion unstressed positions in the capsule and hence yield irradiation creep data. A small number of UK Advanced Gas Reactor (AGR) moderator graphite samples will also be included as part of our Generation IV International Forum (GIF) collaborative effort.

Single crystal graphite. The dimensional change behavior of graphite is particularly significant to the behavior of polycrystalline (polygranular) graphites. Therefore, samples of HOPG are included in HGC-1.

3. Design goals, limitations, and preferences

Table 1 list the design goals for this experiment and includes brief descriptions of the limitations in achieving these goals. The

* Corresponding author.
E-mail address: mcduffeej@ornl.gov (J.L. McDuffee).

0022-3115/$ - see front matter © 2008 Elsevier B.V. All rights reserved.
doi:10.1016/j.jnucmat.2008.07.031

primary limitation in HFIR is usable space. The intended position is in the target region of HFIR, which has a usable length of about 60 cm, with an outer diameter of 2.53 cm (0.995 in). Subtracting needed thicknesses for the outer housing and gas gaps places an upper limit on the specimen holder to about 2.18 cm (0.859 in).

4. Previous design review

There are a number of previous designs and design concepts that accomplish many of the design goals in Table 1. Fig. 1 shows a design developed by Oku et al. [1]. This design uses cylindrical specimens connected by pins. The pin holes alternate by 90° to avoid placing an inadvertent moment on the specimen due, for example, to a misaligned cutout. Control specimens are fitted tightly into the space between the gauge diameter and the button diameter. However, there are several disadvantages to this design, such as

- As in any pin design, the pin creates a large stress concentration at the top of the pin hole.
- Control specimens in this configuration have a different shape and cross section compared to the gauge section of the creep specimen.
- If one specimen fails, the load is removed from all specimens in the chain.

Fig. 2 shows a different design by Everett et al. [2]. In this design, clamps are machined to go around adjacent specimens to apply the load. The specimens are squared, which greatly reduces the space that each specimen takes in the holder. However, the squared edges of this design are not ideal for graphite due to the tendency for cracks to grow along normal edges. Also, an inadvertent moment will be applied to the specimens if the clamp fingers are not perfectly aligned. Finally, this design also has single-point load failure, where the load is removed from the entire chain if one specimen fails.

A third design by Kelly [3] is shown in Fig. 3. This design also uses squared edges, but it has a very elegant concept for preventing single-point load failure. In this case, a compressive load on the outer shell applies a tensile load on the specimens. This has the added advantage that a specimen failure has no effect on the other specimens in the chain. However, similar to the previous design, forks of different lengths will put a moment on the specimen.

5. Current design options

Our design team is currently evaluating two designs that incorporate the best aspects of previous designs and tries to best meet the design goals in Table 1.

5.1. Option 1 – alternating pin design

The alternating pin concept is shown in Fig. 4. Similar to the design by Oku et al. [1] the specimens are attached in the chain with pins, and the pin holes alternate by 90° to avoid inadvertently applying a moment to a specimen due, for example, to a slightly misaligned channel cutout. Because of space limitations, the button section is shaved on opposite sides. The main improvement

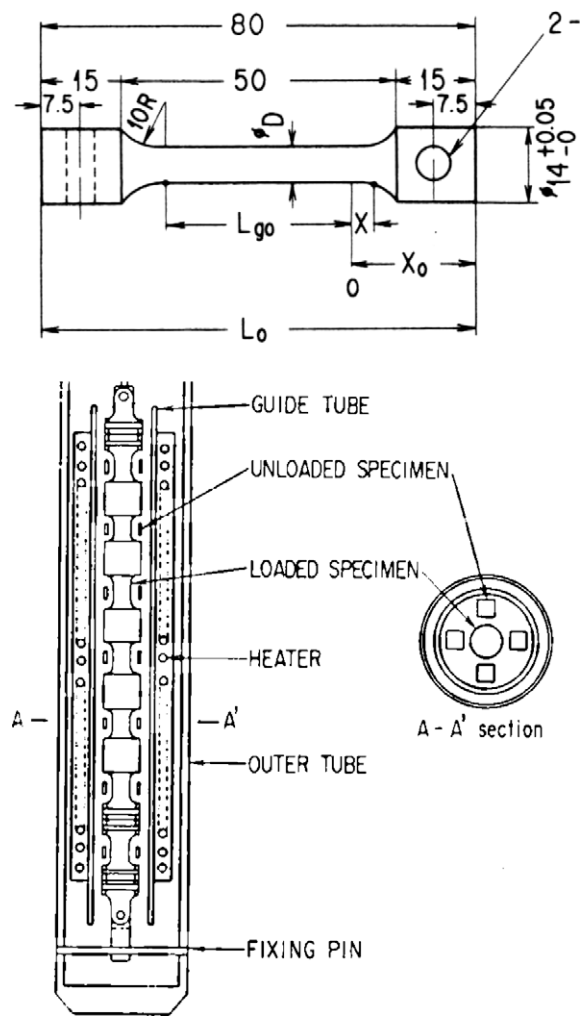

Fig. 1. Alternating pin design by Oku et al. [1].

Table 1
Design goals and limitations

Parameter	Goal	Limitation/discussion
Gauge diameter	As large as possible, and no smaller than 5× maximum grain size	Ultimately limited by the available radial space in the experiment
Individual specimen length	50 mm	The HFIR usable length is about 60 cm. To have room for 8 specimens per chain limits the individual specimen length to about 50 mm
Gauge length	As large as possible	Limited by the necessity to minimize stress concentrations in the button
Specimen shape	Cylindrical	Squared edges in graphite tend to result in small fissures that can lead to crack growth and specimen failure
Specimen loading	Two chains of creep specimens, plus two chains of control specimens	Two largest diameter items must fit within the specimen holder with sufficient room between to ensure structural integrity of the holder
Stress distribution	Stress should be as uniform as possible within the gauge section	Some stress deviation may be present near the button ends
Applied moment	No applied moment to any specimen	Only the alternating pin design can fully eliminate inadvertent moments
Specimen failure	Minimize likelihood of failure; prevent loss of load if failure occurs	Options for preventing loss of load may have detrimental characteristics (see the discussion under design option 1 below)

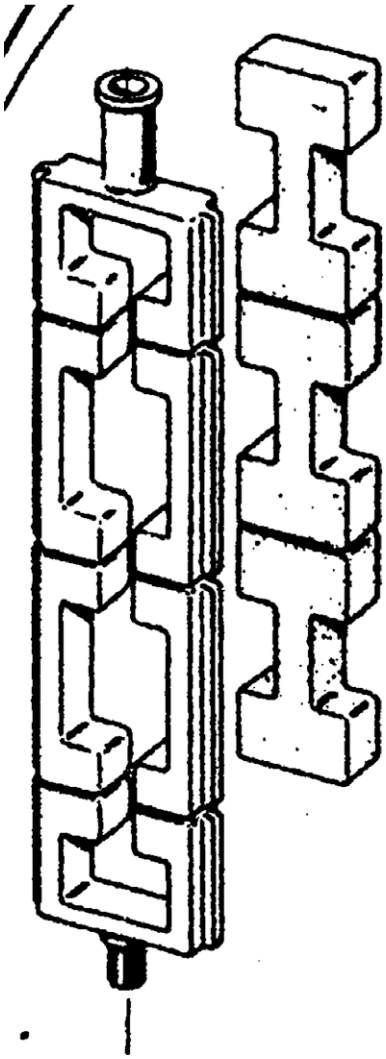

Fig. 2. Clamp design by Everett et al. [2].

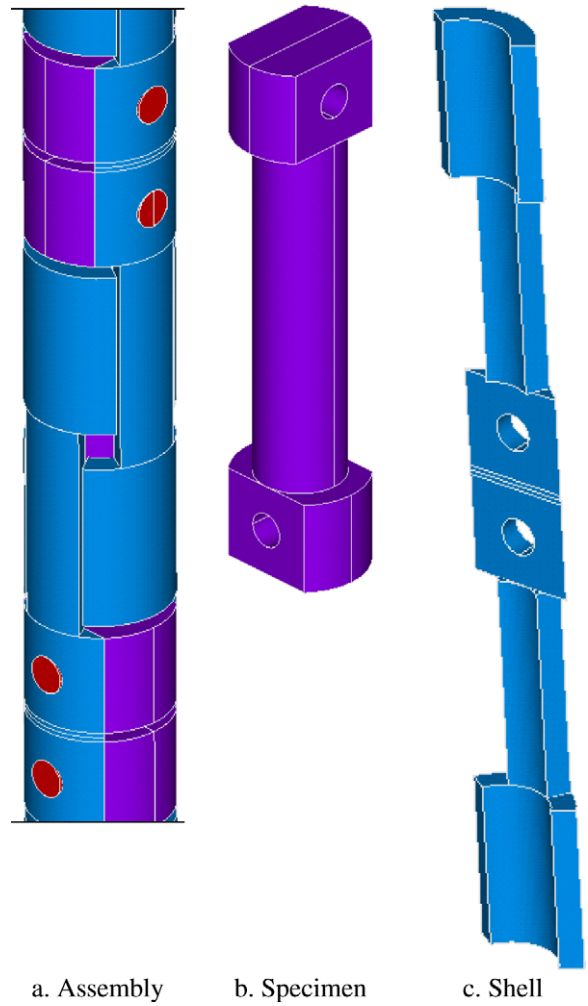

Fig. 4. Alternating pin design concept.

we have made to this concept is shown in the specimen shell. The shell serves three purposes:

1. It transfers the applied load from specimen to specimen through the pins in the middle of each shell.

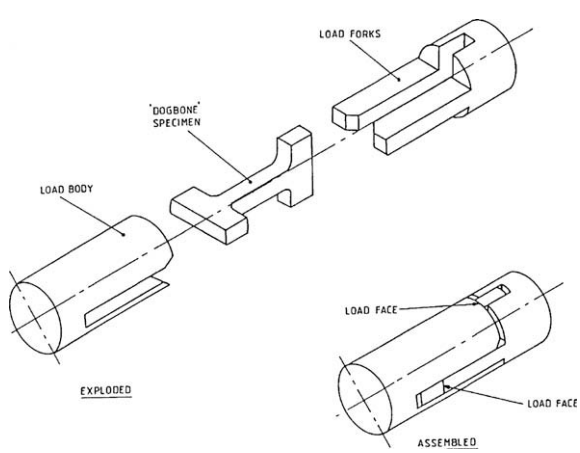

Fig. 3. Design by Kelly [3].

2. It fills the gap between the gauge section and the holder cutout (which is slightly larger than the button diameter) to aid heat transfer from the specimen into the holder. This prevents large temperature variations between the various specimens in the holder.
3. The ends of each shell interlock with adjacent shells so that a specimen failure cannot release the load on the other specimens. If a specimen fails, the load will separate the two halves until the shell ends come together to halt further movement. Note that the specimen channel will prevent the shell from moving radially.

The main limitation of this design concept is that the pin will cause a significant stress concentration along the contact surface. This is exacerbated by the fact that the pin must be designed such that it is smaller than the smallest possible hole, accounting for the expected shrinkage of the graphite specimen. Over an exposure of 1.4×10^{22} n/cm^2 ($E > 50$ keV), a 3% shrinkage can be expected [4], and an additional factor must be applied to account for uncertainty in this estimate. (The specimen will certainly fail if the pin hole shrinks to the pin.) Therefore, the maximum stress concentration will occur at the very beginning of the experiment when the difference between the pin and pin hole is the largest and the strength of the graphite specimen is weakest.

The main advantage of the improvement, the prevention of single-point failure, may potentially also be a failing. The design is

such that the interconnecting shells will slide together if a specimen fails and prevent the complete loss of load to the other specimens. However, if the drop and catch sequence is too fast, it could potentially cause a shock to the other specimens in the chain and lead to cascading specimen failures. This would be worse than just losing the load because at least in that case the data obtained to that point would be preserved.

5.2. Option 2 – axisymmetric clamp design

The second design option under consideration is shown in Fig. 5. The specimen is axisymmetric, which has the advantage of distributing the load over a larger surface area. This also reduces, although not completely, the likelihood of placing a moment on the specimen because irregularities in the surfaces should be randomly distributed around the surface. As in the alternating pin design, the specimen shell serves the three purposes of (1) transferring the load, (2) enhancing heat transfer, and (3) preventing single-point failure.

Although the applied load is better distributed in this design option, there remains an increasing stress concentration due to differential shrinking/swelling. In this case, the shoulder on which the specimen rests inside the shell becomes smaller as the specimen shrinks with respect to the shell. This effect is shown in Fig. 6.

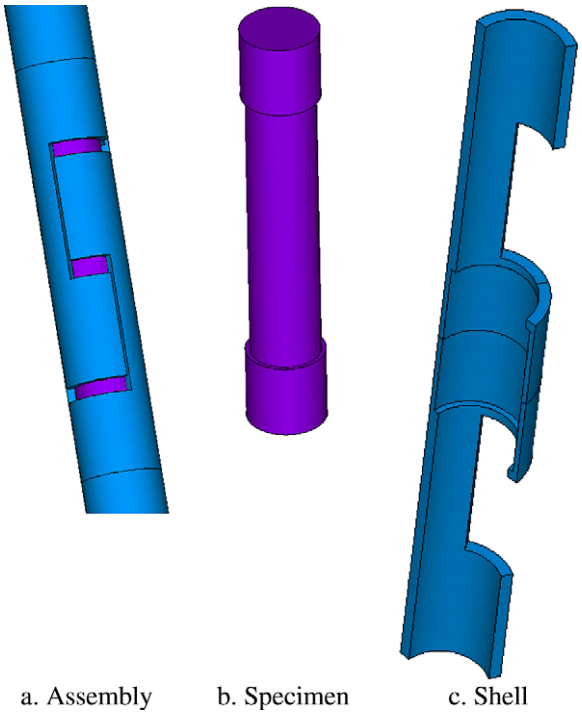

Fig. 5. Axisymmetric clamp design.

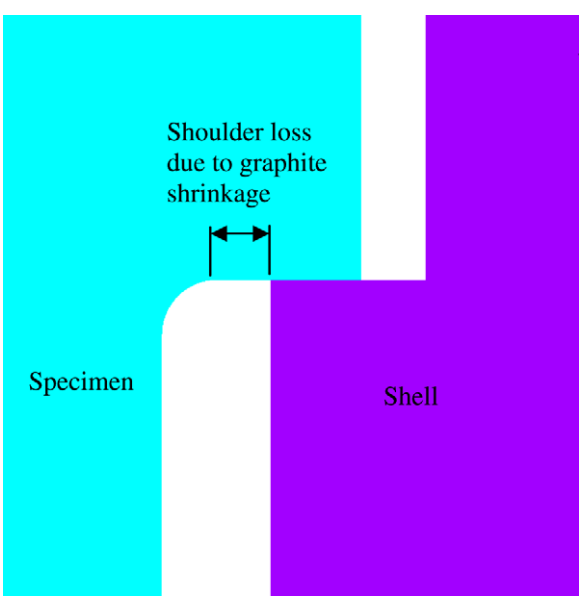

Fig. 6. The effect of differential shrinking/swelling on the axisymmetric clamp design.

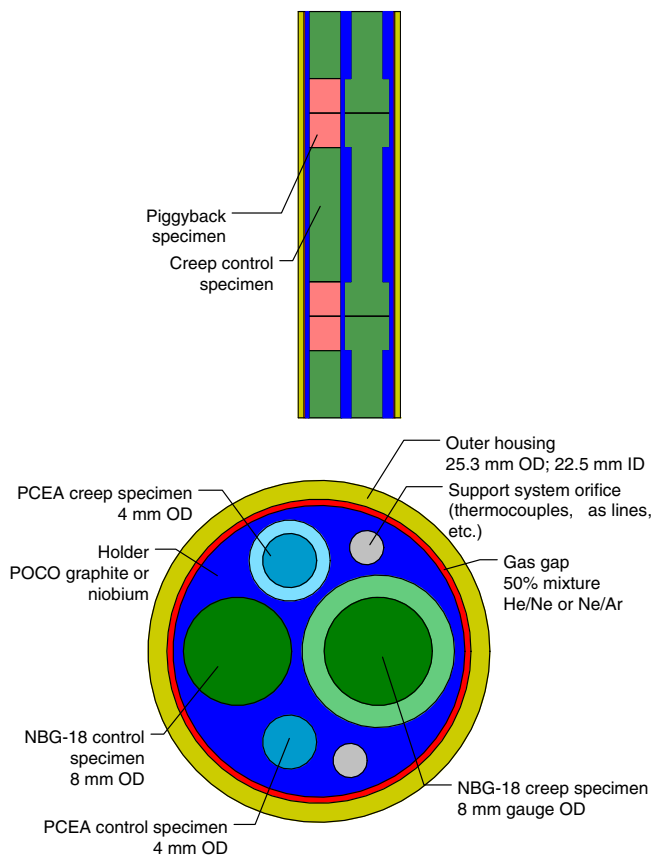

Fig. 7. Experiment layout.

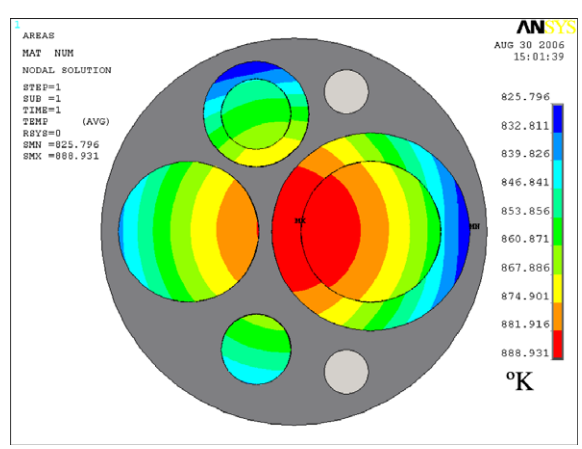

Fig. 8. Preliminary temperature analysis.

The shell also has the same drawback as the alternating pin design – the potential for a sudden shock to cause cascading failures in the other specimens.

6. Experiment layout

The experimental layout is shown in Fig. 7. The experiment accommodates two chains of creep specimens under load plus two chains of control specimens not under load. The creep control specimens are located at the same height as their creep counterparts and are of the exact same size and shape. The gauge diameters of the PCEA and NBG-18 creep and control specimens are 4 mm and 8 mm, respectively, which is approximately 5× the maximum particle size. The control chain will also have piggyback specimens of various materials that will be located in the axial regions taken by the specimen buttons in the creep chain.

7. Material selection

The outer housing shown in Fig. 7 will be fabricated from Al-6061. The holder and specimen shells will be fabricated from either POCO graphite or niobium. Niobium is both stronger and more ductile, but it has a much higher heat generation rate. This leads to hot gaps as small as 0.04 mm at the reactor midplane. Small gaps result in more difficulty in controlling temperature, and it makes safety analysis more difficult. POCO graphite has the advantage of a lower heat generation rate, but will require more active gas mixture control to compensate for shrinking and swelling.

8. Preliminary thermal analysis

Fig. 8 shows the results of a preliminary analysis on an experiment cross section at the reactor midplane. The temperatures are shown in °K. The boundary conditions and assumptions are as follows:

- POCO graphite holder
- 50% He/Ne fill gas mixture
- Heat generation rates for Al-6061 and graphite of 41 W/g and 32 W/g, respectively
- Outer heat transfer coefficient and bulk temperature of 50,000 W/m^2 °C and 49 °C

The holder diameter is set to 2.209 cm (0.8696 in), resulting in an initial cold gap of 0.20 mm (0.0077 in). This gap results in an average specimen temperature of 600 °C, with a temperature span of 63 °C (553–616 °C). The initial hot gap reduces to 0.17 mm (0.0066 in).

9. Conclusions

A preliminary study is being conducted to design a graphite irradiation creep experiment to provide tensile creep data for NGNP relevant graphites. The purpose of this experiment is to provide design data on the effects of irradiation on NGNP relevant graphites over the neutron dose range of 1.0×10^{22} n/cm^2–1.4×10^{22} n/cm^2 [$E > 50$ keV] or 6.8–9.5 dpa at an irradiation temperature of 600 °C and a single tensile stress level of 5 MPa (725 psi). The data to be obtained from this irradiation capsule includes:

- Irradiation creep design data and data on the effects of irradiation creep (tensile) on key physical properties [strength, elastic modulus, coefficient of thermal expansion (CTE)]
- Data on the single-crystal irradiation behavior of graphites to be derived from HOPG.

Two primary design options are currently under consideration. Design option 1 is an alternating pin design, and design option 2 is an axisymmetric clamp. Both designs incorporate interlocking shells that serve to (1) transfer the load from specimen to specimen, (2) enhance heat transfer from the specimens to the holder, and (3) prevent a complete loss of load should one specimen in the chain fail. However, the design team is currently weighing the advantages of maintaining the load on the remaining specimens versus the risk of cascading the failure to the other specimens due to the potential shock as the specimen shells lock together.

Acknowledgements

This work is sponsored by the U.S. Department of Energy, Office of Nuclear Energy Science and Technology under contract DE-AC05-00OR22725 with Oak Ridge National Laboratory, managed by UT-Battelle, LLC.

References

[1] T. Oku, K. Fujisaki, M. Eto, J. Nucl. Mater. 152 (1988) 223.
[2] M.R. Everett et al., J. Nucl. Mater. 65 (1977) 107.
[3] B.T. Kelly, A Feasibility Study for an Irradiation Creep Experiment on AGR Moderator Graphite, AEA Thermal Reactor Services, AEA TRA 5083, March 1991.
[4] J.A. Vreeling et al., in: Sixth International Nuclear Graphite Specialists Meeting, Chamonix, September 2005.