Power Conversion Systems for ORNL SmAHTR Fluoride Salt Reactor Conceptual Design

American Nuclear Society: 2010 Winter Meeting
November 11, 2010

Tommy Cisneros
University of California at Berkeley *4155 Etcheverry Hall MC Berkeley, California 94720, tommycisneros@berkeley.edu*
Louis Qualls
Oak Ridge National Laboratory, P.O. Box 2008, MS-6165, Oak Ridge, Tennessee 37831-6165, quallsal@ornl.gov

SmAHTR Reactor Concept

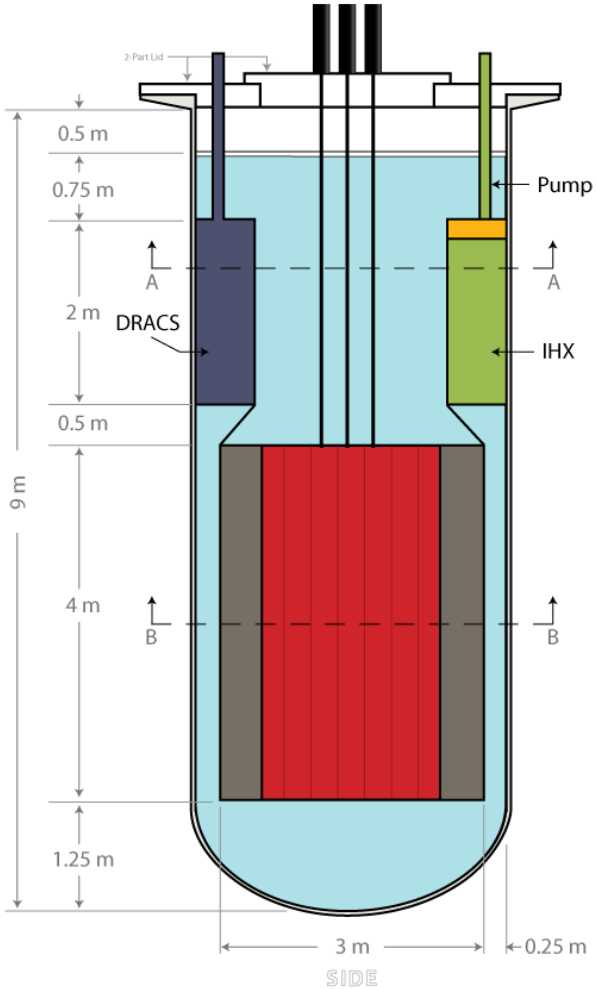

Overall System Parameters

Parameter	Value
Power [MW(t)/MW(e)]	125 / 50+
Primary Coolant	$LiF\text{-}BeF_2$
Primary Pressure (atm)	~1
Core Inlet Temperature (^oC)	650
Core Outlet Temperature (^oC)	700
Core coolant flow rate (kg/s)	1020
Operational Heat Removal	3–50% loops
Passive Decay Heat Removal	3–50% loops
Power Conversion	Brayton
Reactor Vessel Penetrations	None

Design Goals of the SmAHTR

- Initial concept operating temperatures of 700°C with future evolution path to 850°C and 1000°C
- Integral system architectures compatible with remote operations
- Passive decay heat removal
- **Truck transportable**

SmAHTR Power Conversion Options

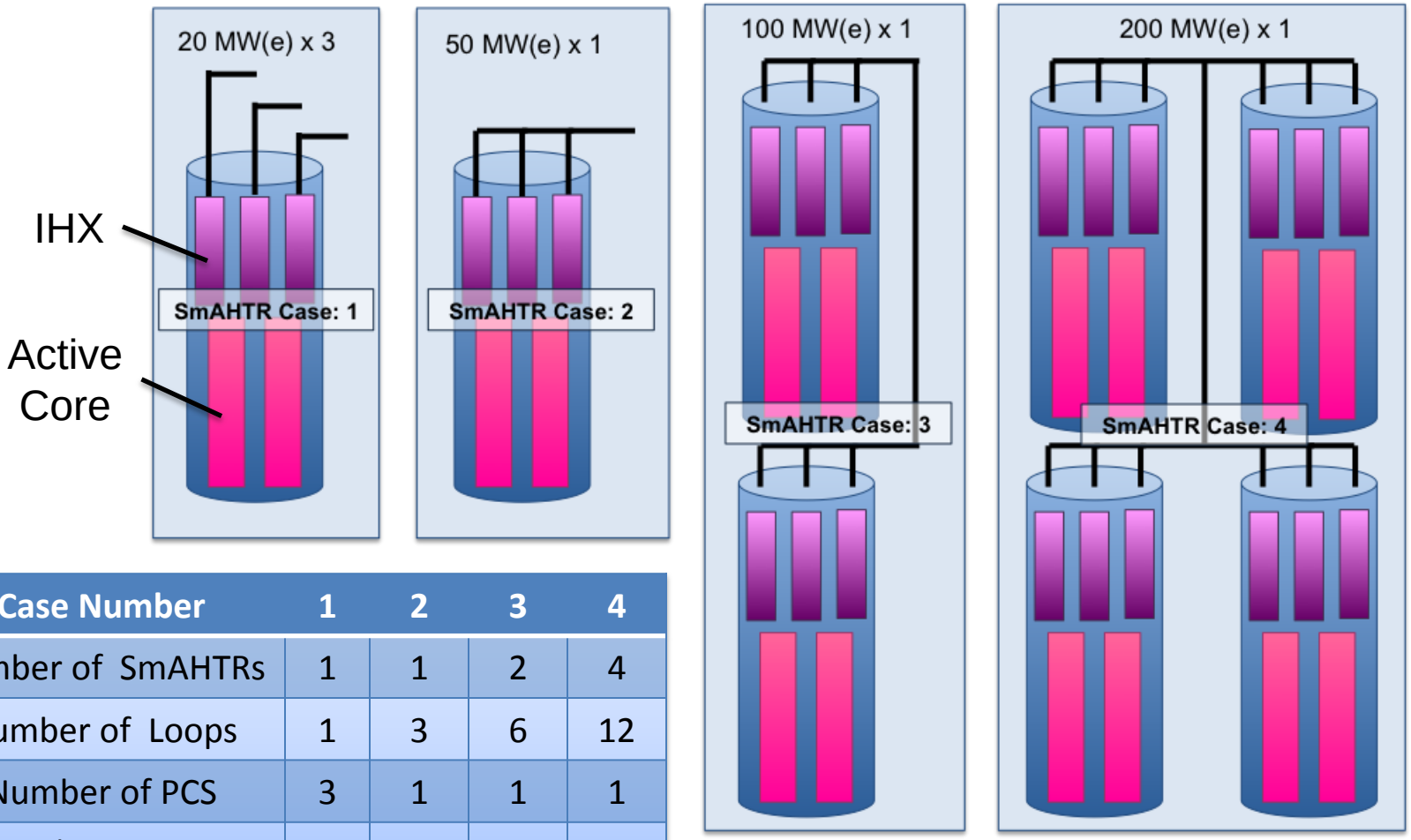

Case Number	1	2	3	4
Number of SmAHTRs	1	1	2	4
Number of Loops	1	3	6	12
Number of PCS	3	1	1	1
Power/PCS [MW(t)]	42	125	250	500

Efficiency Comparison

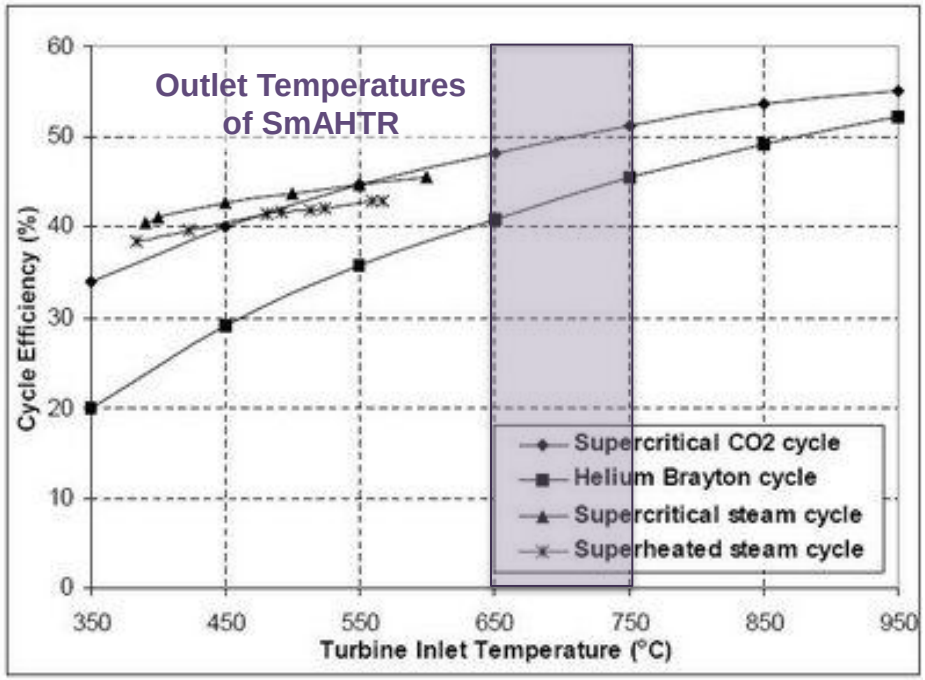

Use by permission. then list reference

- Steam becomes prohibitive at higher temperatures
- CO_2 may experience reaction issues above 800ºC with stainless steel, but operation to 750ºC is thought possible.
- S-CO_2 gets higher efficiency than helium and gets good efficiency at modest temperatures
- Helium needs 200ºC higher temperatures and more components to achieve the higher efficiencies
  - But you can make a decent system with two compressors and one turbine

Turbo Machinery Size Comparison

Use by permission. then list reference

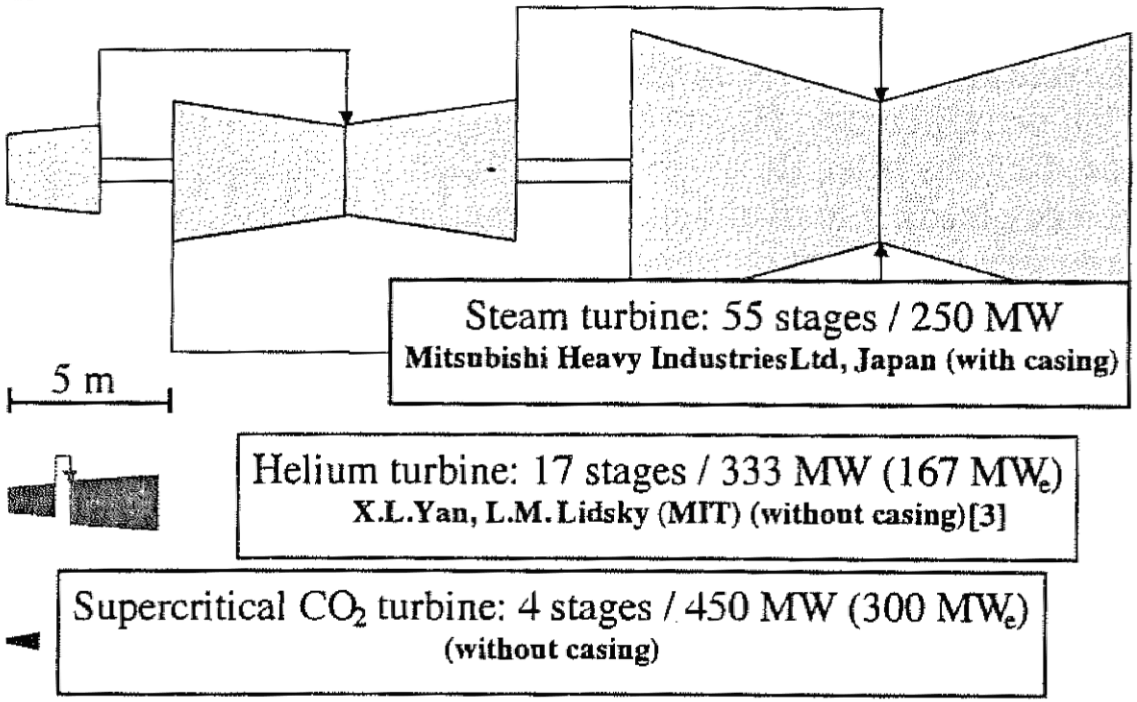

Fig. 1. Comparison of turbine sizes.

- In addition to increased thermal efficiency, S-CO_2 cycle provide significant TM size reduction

Complexity: Helium requires more components to get to higher efficiency (120 MW example, 879°C, 3 shaft system, 48%)

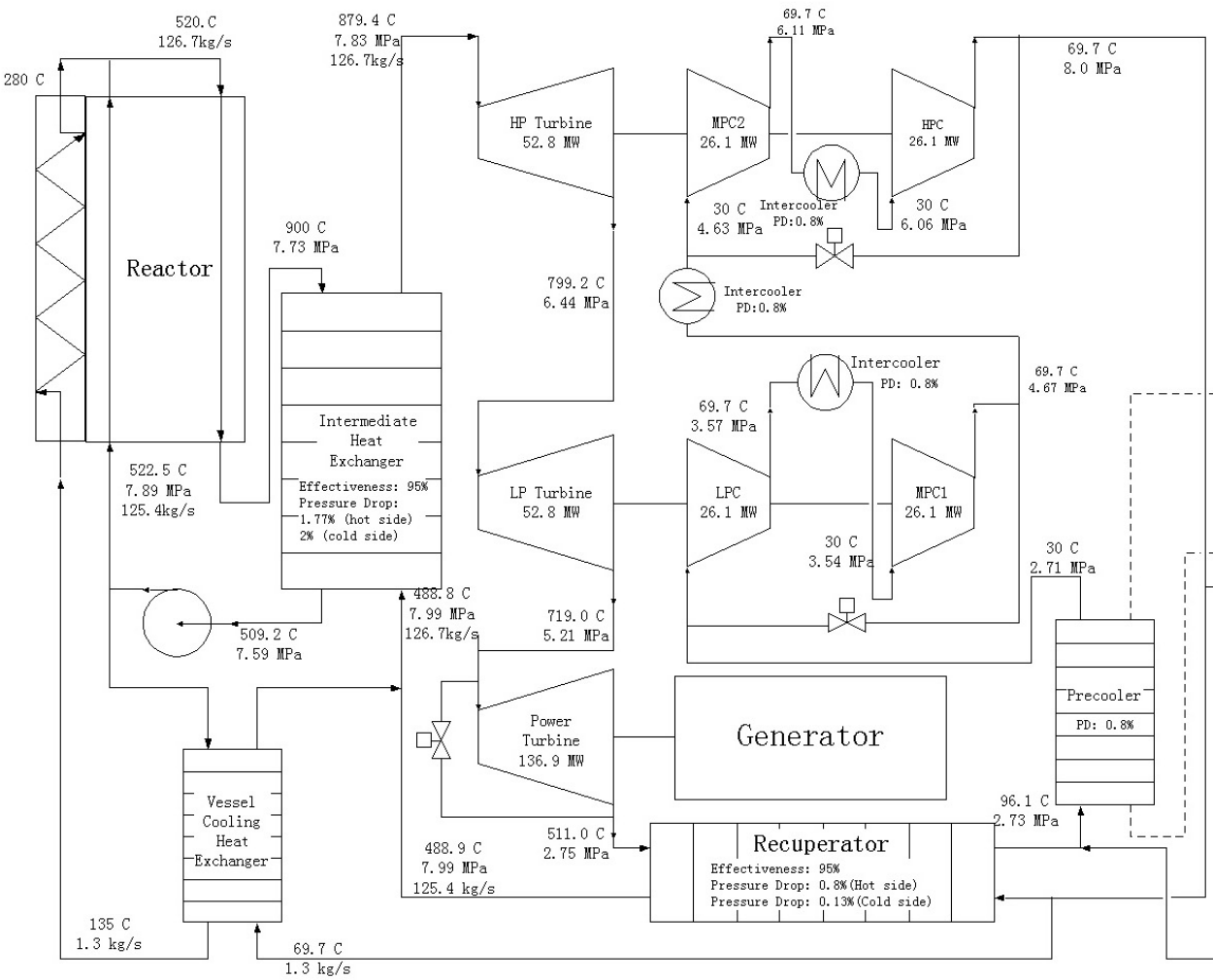

Parameter	Value
Thermal Power (MW)	250
Gross Power (MWe)	132.5
Circulator Power (MWe)	8.96
Station Loads (MWe)	2.5
Switch-yard loss	0.6%
Sys. radiation loss(MWth)	0.5
Net Power (MWe)	120.3
Net Efficiency	48.1%
Pressure Ratio	2.96
Turbine Poly. Effi.	92%
Compressor Poly. Effi.	90%
Mechanical Losses	1%
Total Mass Flow (kg/s)	126.7

Not considering cooling IHX, Turbines

S-CO_2 Re-compression Cycle

Courtesy of Barber-Nichols Inc.

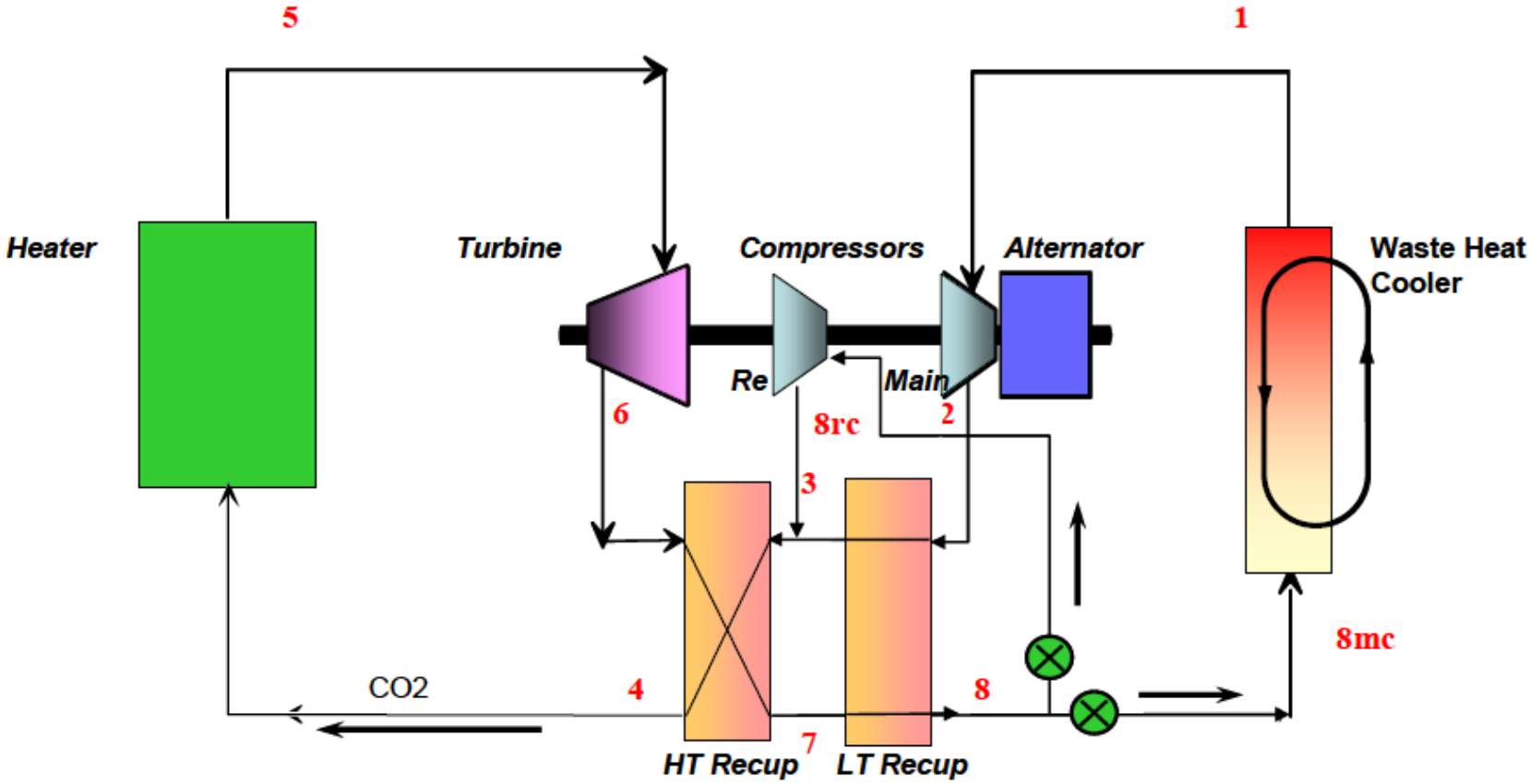

Helium Power Conversion Options

Number of SmAHTRs	4	2	1
Number of loops	12	6	3
Power [MW(t)]	500	250	125
Net efficiency*	0.467	0.463	0.458
PCS power [MW(e)]	**233.5**	**115.8**	**57.3**
Number of PCS	1	1	1
	~GT-MHR	~PBMR	~Oberhausen II

When looking at Helium PCS options we have some direct history

* Assuming 650ºC Turbine inlet temperature

~50 MW(e) Helium TM

(1 SmAHTR)

Oberhausen II never made more than 30 MW(e) due to design flaws and had higher than expected helium leakage, but it was a good learning step.

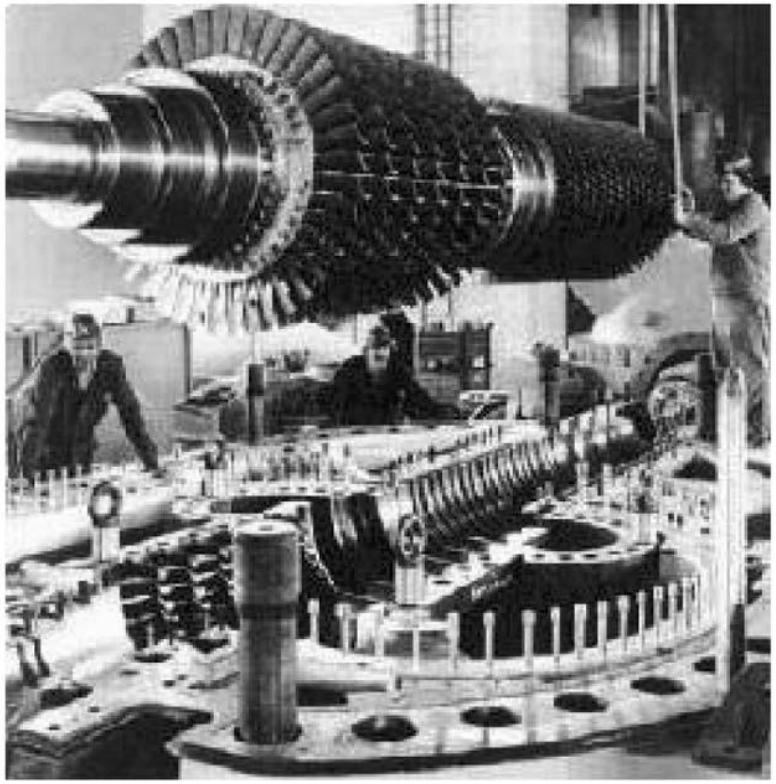

Component size is not too bad.

~ 120 MW(e) Helium PBMR

(2 SmAHTR's)

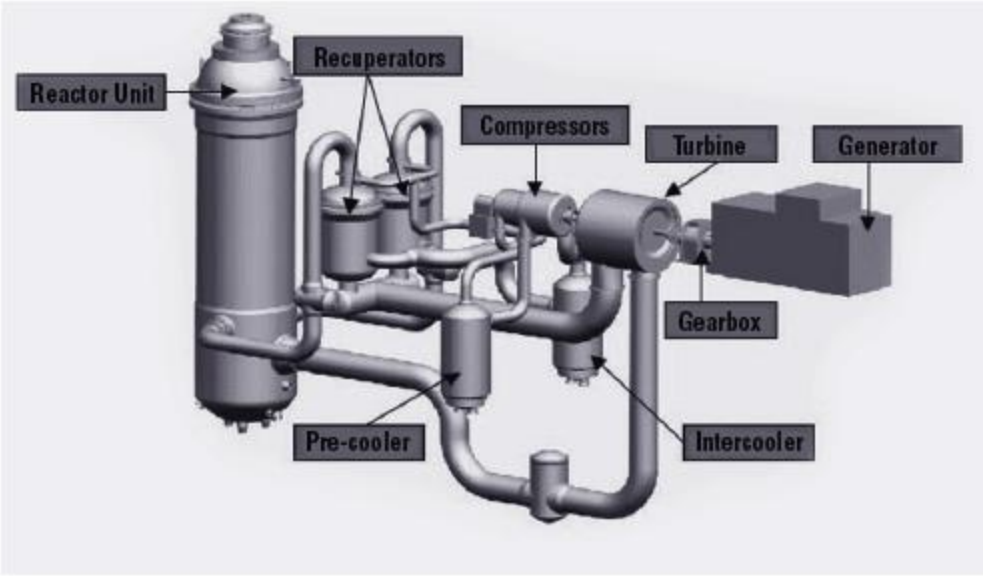

- PBMR has looked at single and multiple shaft configurations, horizontal and vertical shaft configurations, and distributed and integrated PCS layouts.

PBMR Helium PCS

(~ 2 SmAHTR's)

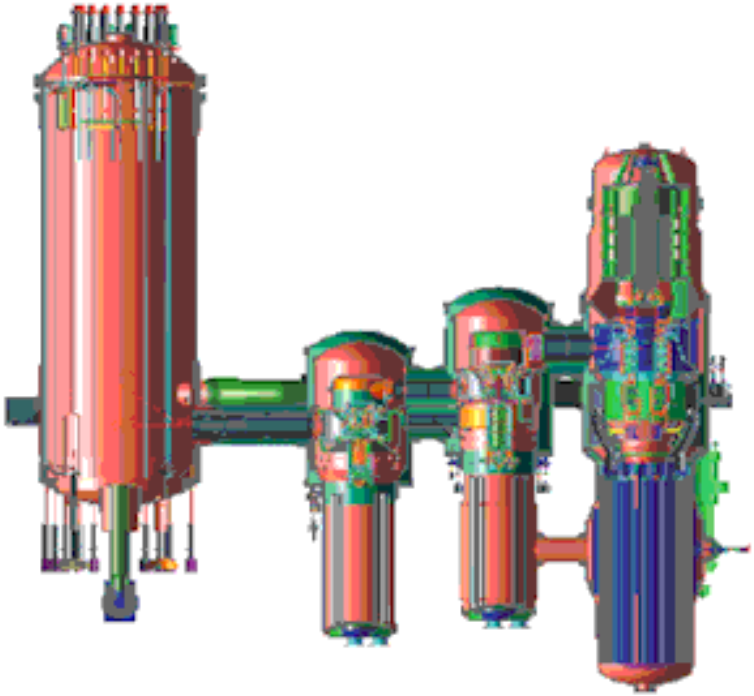

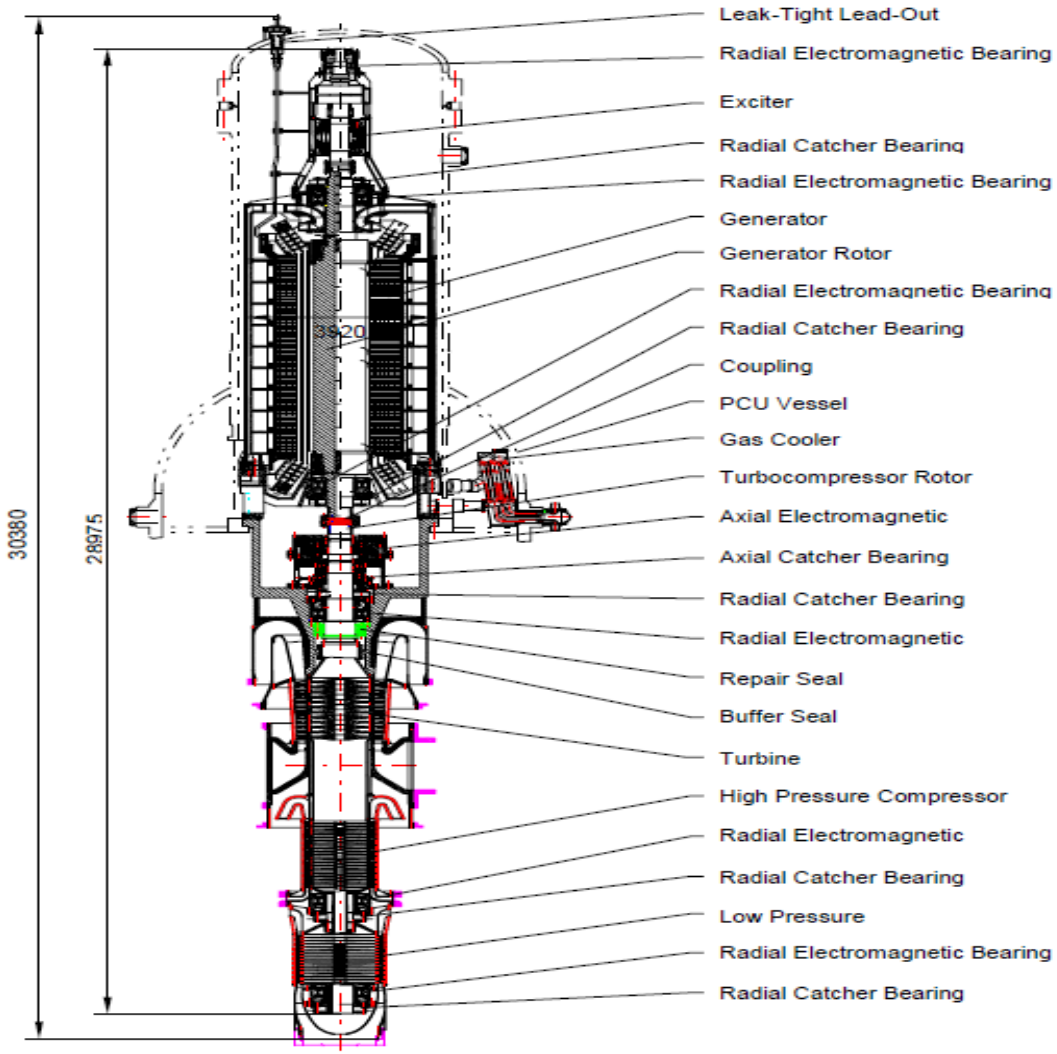

- Combined assemblies are ~30 m tall
- Recuperators and pre-coolers are separate

GT-MHR Helium PCS

(~ 4 SmAHTR's)

- Uses a single PCU with two compressors and a single turbine
- ~ 6 MPa
- 34-meters tall
- 8 meter diameter
- 250 MW(e)

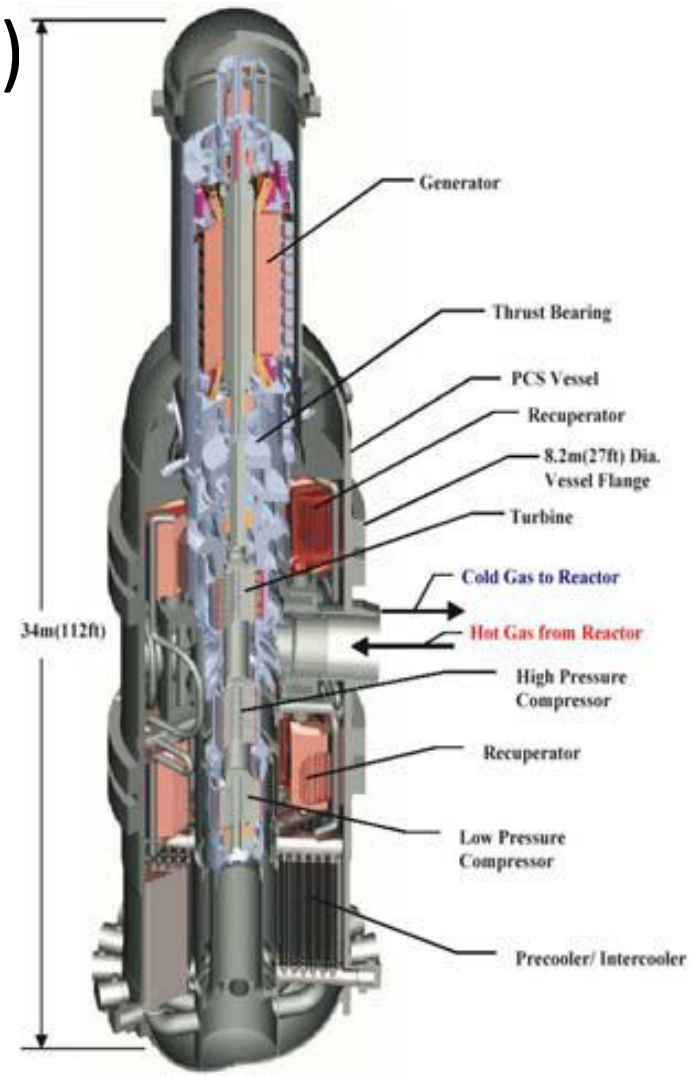

Supercritical CO_2 Turbo Machinery

Use by permission.
then list reference

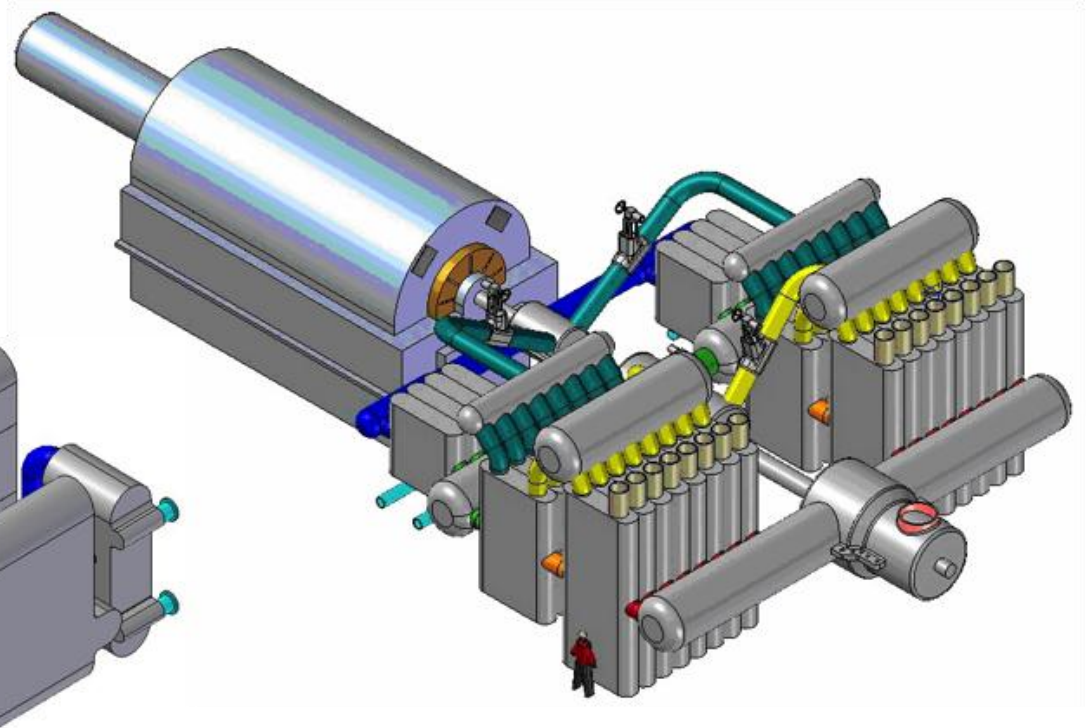

300 MWe S-CO2 Layout (MIT/SNL) ~5 SmAHTRs

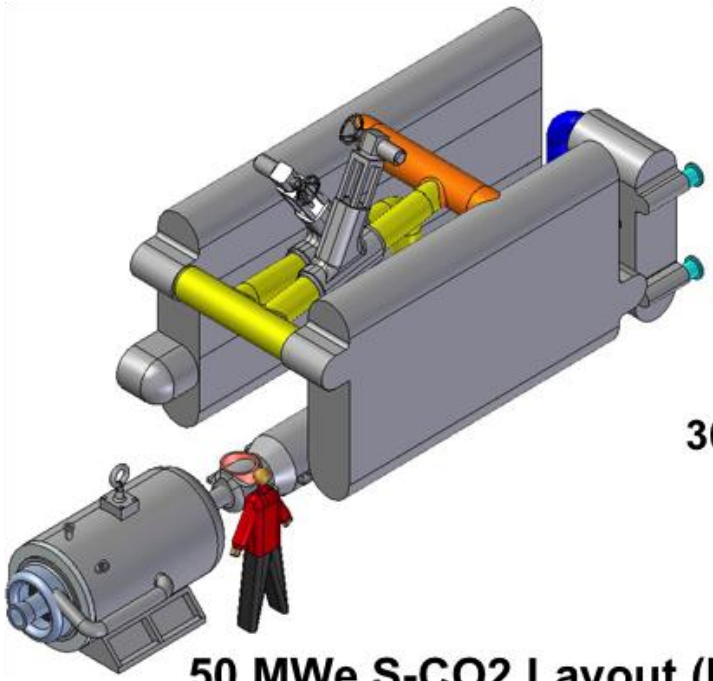

50 MWe S-CO2 Layout (MIT/SNL) ~1 SmAHTR

PCU Comparison

FLUID	Steam	Nitrogen	Helium	S-CO2
Size		Larger diameter than helium, same length	More stages, smaller blades, large systems	Estimated 46% smaller than helium
Efficiency	About same as S-CO_2 at temperature limit, more than helium at limit		Need 850°C and generally more TM to be attractive	Fewer components gets good efficiency at modest temperatures
Operating Pressure	6 MPa @ 275°C	3 MPa @ 900°C	6–8 MPa @ 850°C to 900°C	20 MPa
Technical Maturity	mature	Open cycle mature	Some relevant testing but mostly design, current development limited	TM needs extrapolation to higher powers, HX's to higher pressure
Evolutionary Limits	550°C	Chemistry ?	1200°C?	750°C–800°C

PCU Comparison

	Steam	Nitrogen	Helium	S-CO_2
Size	4	3	2	1
Efficiency	4	3	2	1
Operating Pressure	1	2	3	4
Technical Maturity	1	2	3	4
Evolutionary Limits	4	3	1	2
	14 (last)	13 (poor)	11 (best)	12 (second)

Recommendation

- Consider S-CO_2 for smaller nearer-term applications
  - The first high temperature reactors will be below 700°C and this will be a good fit
- Transition to helium systems as reactor temperature increases
- Focus on heat exchanger trades in the near term
  - We think it is easier to deal with the pressure concerns at lower temperature than to deal with the temperature concerns (at any pressure) at this time
  - Helium system size is not attractive at these temperatures
  - Helium system efficiencies won't pay out until turbine inlet temperatures approach 850°C
  - S-CO_2 system development is just beginning
    - As helium system development seems to be winding down

SmAHTR S-CO_2 Power Conversion Options

SmAHTR Case	1	2	3	4
Number of SmAHTRs	1	1	2	4
Number of loops	3	3	6	12
Number of PCS	3	1	1	1
Net Efficiency (%)	**45.0**	**45.8**	**46.3**	**46.7**
Power [MW(t)]	41.6	125	250	500
Power [MW(e)]	18.8	57.3	115.8	233.7

* Assuming 650ºC Turbine inlet temperature

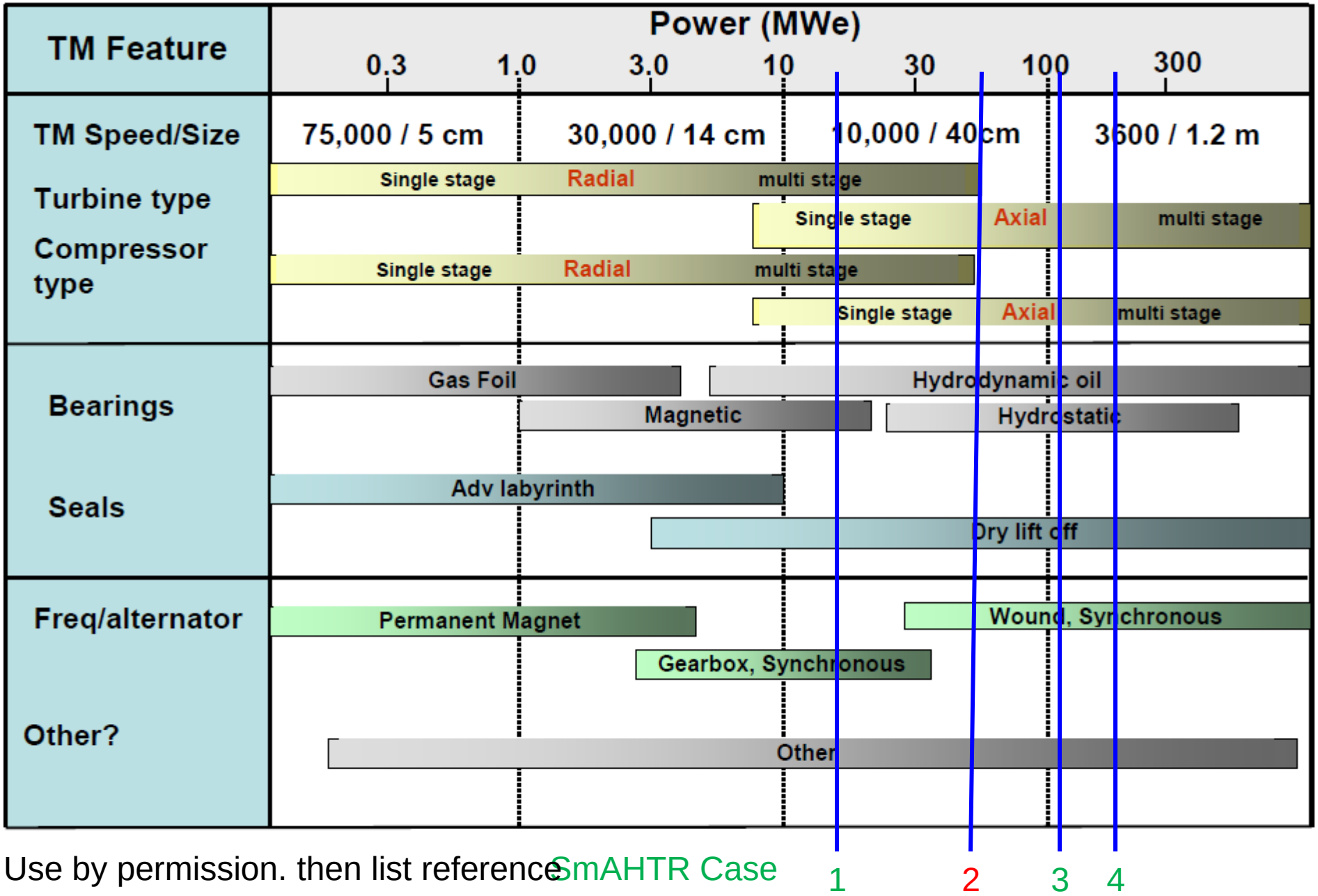

Use by permission. then list reference SmAHTR Case

Figure 1. Component and technology options for S-CO2 Brayton cycles for small scale to commercial scale systems.

SmAHTR S-CO_2 Case Studies

SmAHTR Case Study		**1**	**2**	**3**	**4**
Thermal Power	**MW**	**41.67**	**125.00**	**250.00**	**500.00**
Elect Cycle Efficiency		**0.45**	**0.46**	**0.46**	**0.47**
Electrical Power	MW	18.75	57.20	116.00	234.00
Compressor OD	m	0.18	0.38	0.50	0.62
Re-compressor OD	m	0.32	0.66	0.88	1.09
Turbine OD	m	0.33	0.67	0.89	1.11
Radius of the permanent magnet	m	0.40	0.83	1.10	1.37
PM rotor length to give power	m	1.21	2.48	3.29	4.09
Mass of rotor	MT	1.40	9.24	21.23	45.30
Mass of LT recuperator	MT	10.41	31.70	64.27	129.62
Mass of HT recuperator	MT	34.41	104.38	211.39	426.15
gas to gas HX mass per PCS	MT	44.81	136.08	275.66	555.76
Number of PCS		3	1	1	1
Total gas to gas HX mass	MT	134.44	136.08	275.66	555.76
shaft speed	RPM	**12000**	**10000**	**5400**	**3600**
gear box		yes	yes	yes	no

These data created from an extrapolation of calculations from S-CO_2 power Conversion made by Barber Nichols.

Most cycle analyses focus on 20 MPa systems

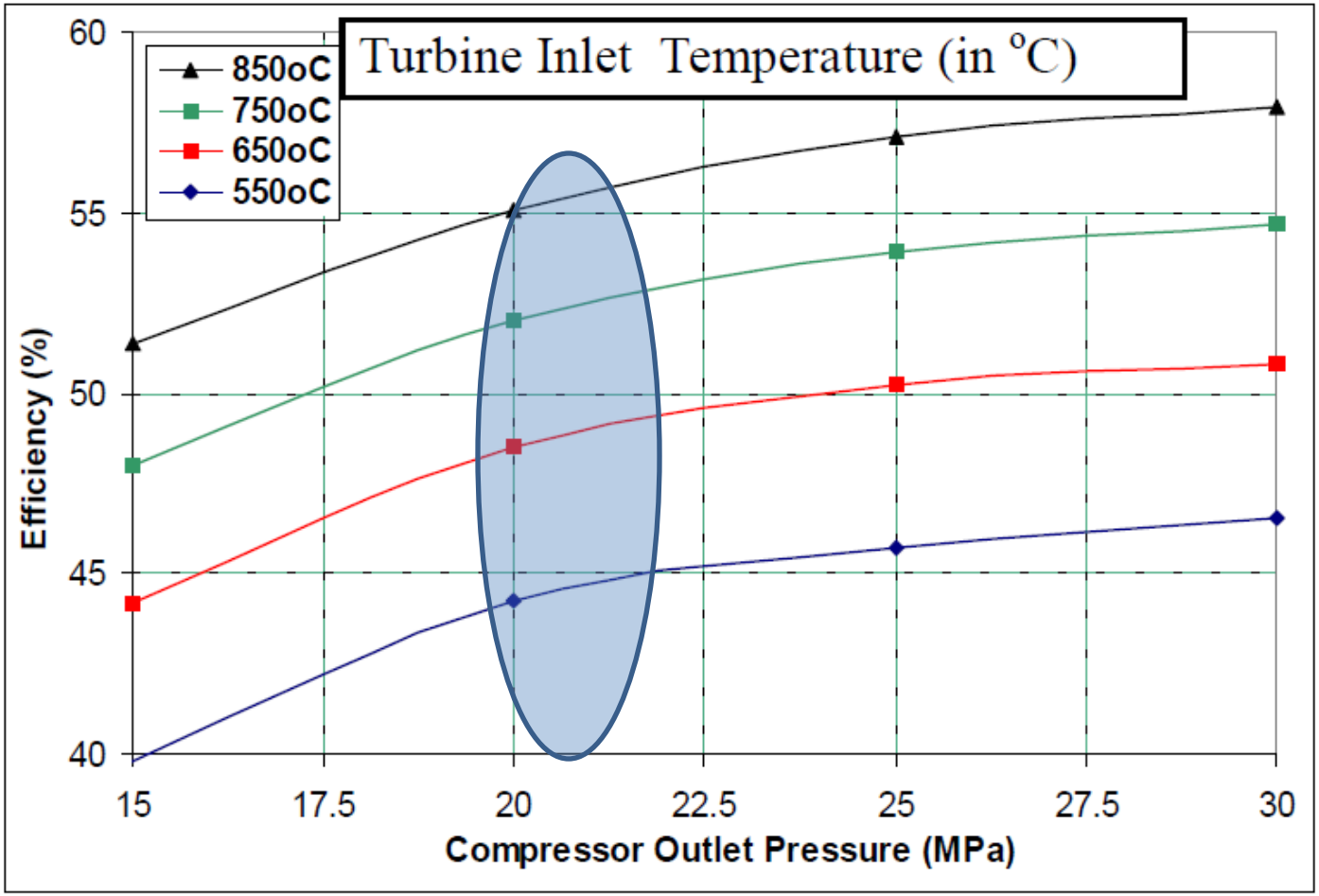

Use by permission. then list reference

Plant would be better as a baseload plant because the penalty for operating at 2/3 of PCS design rating is severe

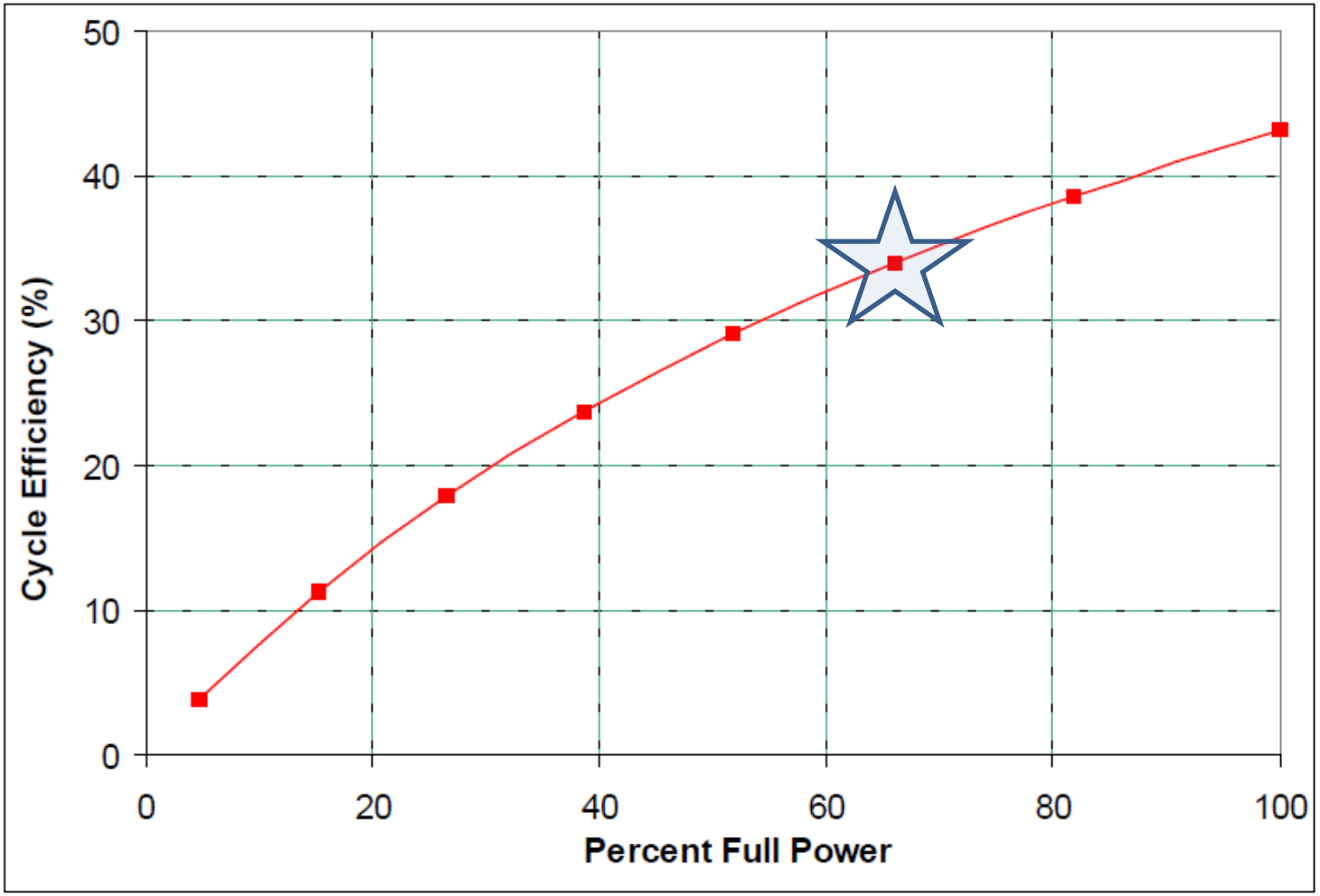

Use by permission. then list reference

Heat Exchangers are a Key Development Issue

All Brayton concepts are relying on the development of plate fin HE or PCHE© technology

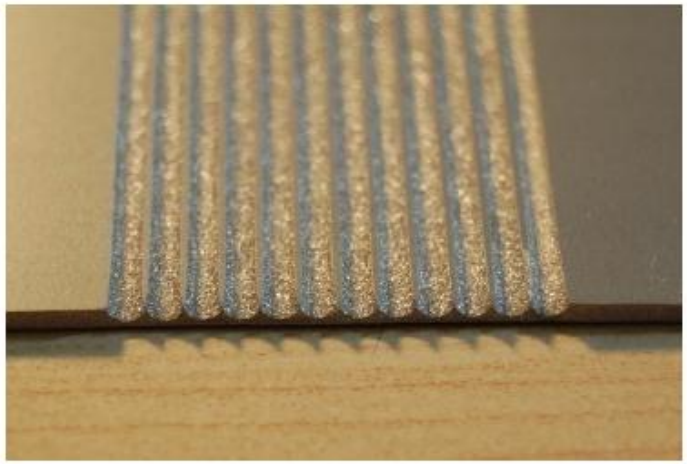

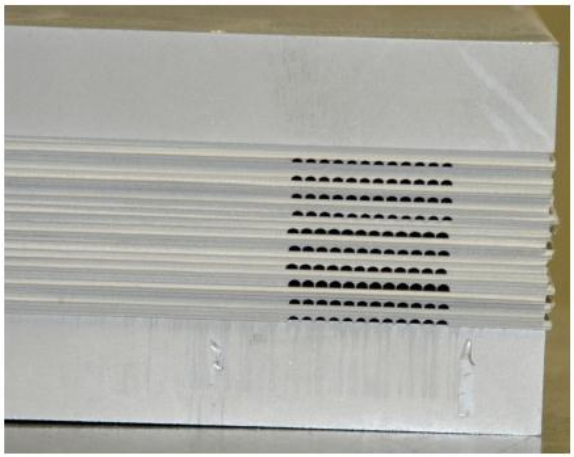

Can compact high temperature and pressure heat exchangers be made to the <u>scale</u> required with sufficiently long <u>lifetimes</u> and low <u>expense</u> to make S-CO_2 power conversion competitive?

Heatric Printed Circuit Board Heat Exchanger
0.5 MW CO_2 to H_2O Pre-cooler

Courtesy of Barber-Nichols Inc.

SNL currently testing stainless steel PCHE's rated for 18 MPa and 600°C.
Steve Wright (SNL) feels that 750°C may be a limit in CO_2 due to surface reactions.
AGR's operate at 650°C.

Hastelloy X

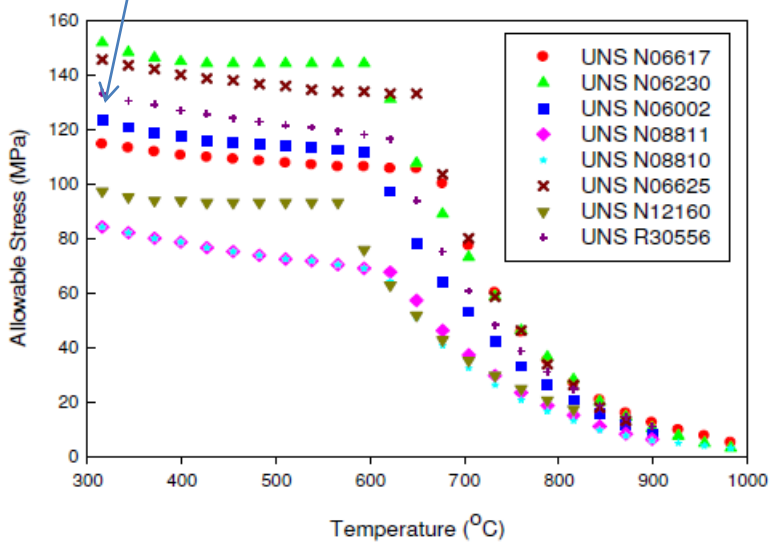

Design thickness for fixed pipe size and pressure for various materials

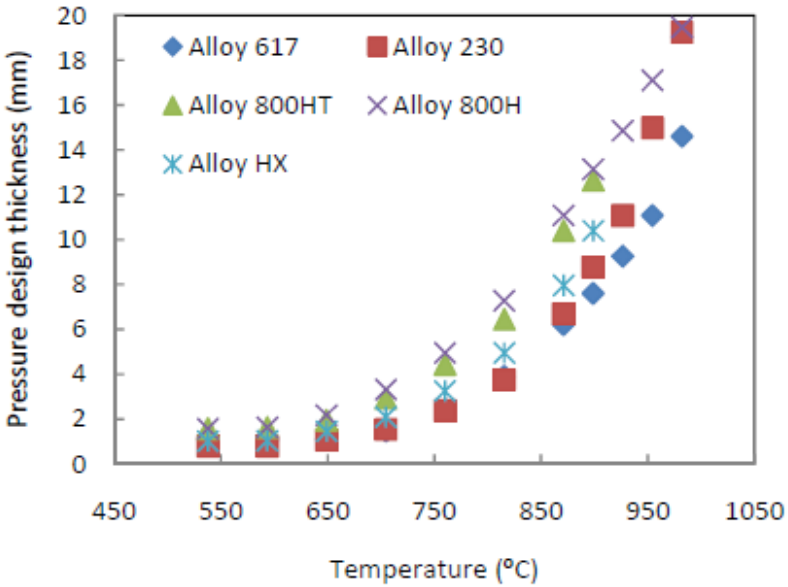

Conclusions

- S-CO_2 is a good temperature match for SmAHTR from 550ºC to 700ºC
  - At 800ºC helium Brayton system efficiencies become competitive
- The re-compression cycle is the best fit for power generation – *especially related to control issues*
- S-CO_2 components will be small, heat exchangers will dominate costs
- Efficiency increases with thermal power for the same state point conditions
- Efficiency increases with increasing turbine Inlet temperature
  - 2% to 3% gain per 50ºC of temperature increase
- PCHE can handle the pressure and are important to the success of an economical S-CO_2 PCS
- **Recommend that a 10-MW(e) non-nuclear S-CO_2 Brayton demonstration be pursed using partners in fossil and renewables programs**

This effort references the excellent work of many folks from several organizations

REFERENCES

- **Greene, Sherrell. "SmAHTR—A Small Modular High-Temperature Fluoride Salt Reactor System," *Trans. Am. Nucl. Soc*., 102, p. 415 (2010).**

- **Charles Forsberg, Per Peterson, Paul Pickard, "Molten-Salt-Cooled Advanced High Temperature Reactor for Production of Hydrogen and Electricity," *Nuclear Technology*, 144 (2003).**

- ***A Supercritical Carbon Dioxide Cycle for Next Generation Nuclear Reactors*, V. Dostal, M. J. Driscoll, P. Hejzlar, MIT-ANO-TR-100, March 2004)**

- ***Applicability of Supercritical CO_2 Power Conversion Systems to GEN IV Reactors*, J.P. Gibbs, P. Hejzlar and M.J. Driscoll, Topical Report No: MIT-GFR-037**

- ***Potential Improvements of Supercritical CO_2 Brayton Cycle by Mixing of Other Gases with CO_2*, Jeong, Lee, No, Korea Advanced Institute of Science and Technology.**

- ***Turbomachinery Scaling Considerations for Supercritical CO_2 Brayton Cycles*, Bob Fuller (Barber Nichols Inc.), Steve Wright, Paul Pickard (Sandia National Laboratories)**