Proceedings of HTR 2010
Prague, Czech Republic, October 18-20, 2010
Paper 197

Development of a Forced-Convection Liquid-Fluoride-Salt Test Loop

Graydon L. Yoder, Jr., Adam Aaron, Dennis Heatherly, David Holcomb, Roger Kisner, Fred Peretz, Glenn Romanoski, John Wilgen, Dane Wilson
Oak Ridge National Laboratory, Oak Ridge, TN 37831, USA
phone: 011-865-574-5282, yodergljr@ornl.gov

Abstract – *A small forced-convection molten-fluoride-salt loop is being constructed at Oak Ridge National Laboratory to examine the heat transfer behavior of FLiNaK salt in a heated pebble bed. Objectives of the experiment include reestablishing infrastructure needed for fluoride-salt loop testing, developing a unique inductive heating technique for performing heat transfer (or other) experiments, measuring heat transfer characteristics in a liquid-fluoride-salt-cooled pebble bed, and demonstrating the use of silicon carbide (SiC) as a structural component for salt systems. The salt loop will consist of an Inconel 600 piping system, a sump-type pump, a SiC test section, and an air-cooled heat exchanger, as well as auxiliary systems needed to pre-heat the loop, transport salt into and out of the loop, and maintain an inert cover gas over the salt. A 30,000 Hz inductive heating system will be used to provide up to 250 kW of power to a 15 cm diameter SiC test section containing a packed bed of 3 cm graphite spheres. A SiC-to-Inconel 600 joint will use a conventional nickel/grafoil spiral wound gasket sandwiched between SiC and Inconel flanges. The loop system can provide up to 4.5 kg/s of salt flow at a head of 0.125 MPa and operate at a pressure just above atmospheric. Pebble Reynolds numbers of up to 2600 are possible with this configuration. A sump system is provided to drain and store the salt when not in use. Instrumentation on the loop will include pressure, temperature, and flow measurements, while the test section will be instrumented to provide pebble and FLiNaK temperatures.*

I. INTRODUCTION

Effective high-temperature thermal energy exchange and delivery at temperatures over 600°C has the potential of significant impact by reducing both the capital and operating cost of energy conversion and transport systems. It is one of the key technologies necessary for efficient hydrogen production and could potentially enhance efficiencies of high-temperature solar systems. Today, there are no standard commercially available high-performance heat transfer fluids above 600ºC. High pressures associated with water and gaseous coolants (such as helium) at elevated temperatures impose limiting design conditions for the materials in most energy systems. Liquid salts offer high-temperature capabilities at low vapor pressures, good heat transport properties, and reasonable costs and are therefore leading candidate fluids for next-generation energy production. Liquid-fluoride-salt-cooled, graphite-moderated reactors, referred to as Fluoride Salt Reactors (FHRs), are specifically designed to exploit the excellent heat transfer properties of liquid fluoride salts while maximizing their thermal efficiency and minimizing cost. The FHR's outstanding heat transfer properties, combined with its fully passive safety, make this reactor the most technologically desirable nuclear power reactor class for next-generation energy generation.

Multiple FHR designs are presently being considered. These range from the Pebble Bed–Advanced High Temperature Reactor (PB-AHTR) [1] design originally developed by UC-Berkeley to the Small Advanced High-Temperature Reactor (SmAHTR) being developed at ORNL [2]. The value of high-temperature, molten-salt-cooled reactors is also recognized internationally, and

Czechoslovakia, France, and India all have salt-cooled reactor development under way.

The liquid salt experiment presently being developed uses the PB-AHTR as its focus. One core design of the PB-AHTR features multiple 20 cm diameter, 3.2 m long fuel channels with 3 cm diameter graphite-based fuel pebbles slowly circulating up through the core. Molten salt coolant (FLiBe) at 700°C flows concurrently (at significantly higher velocity) with the pebbles and is used to remove heat generated in the reactor core (approximately 1280 W/pebble), and supply it to a power conversion system. Refueling equipment continuously sorts spent fuel pebbles and replaces spent pebbles with fresh fuel. By combining greater or fewer numbers of pebble channel assemblies, multiple reactor designs with varying power levels can be offered. The PB-AHTR design is discussed in detail in Reference [1] and is shown schematically in Fig. 1.

Pebble behavior within the core is a key issue in proving the viability of this concept. This includes understanding the behavior of the pebbles thermally, hydraulically, and mechanically (quantifying pebble wear characteristics, flow channel wear, etc). The experiment being developed is an initial step in characterizing the pebble behavior under realistic PB-AHTR operating conditions. It focuses on thermal and hydraulic behavior of a static pebble bed using a convective salt loop to provide prototypic fluid conditions to the bed, and a unique inductive heating technique to provide prototypic heating in the pebbles.

II. BACKGROUND

An extensive amount of work has been performed examining the performance of packed and fluidized beds in support of the chemical and petroleum industries, and entire texts are devoted to this subject [3,4]. Packed beds are used to enhance both mass and heat transfer performance, and specific packing designs have been developed over the years to optimize these characteristics. In most packed bed systems used to improve heat transfer performance, heat is added externally, and the packing is used to augment heat transfer in the channel. The existing body of literature includes studies investigating radiative as well as convective transport within the bed [5,6], the influence of the wall on geometrical packing [7,8], and details of the turbulence within the bed [9,10], as well as other phenomena. A unique feature of pebble-fueled reactor systems is that heat is generated within the pebbles themselves, and the heat transfer from the pebble to the molten salt dictates the fuel temperature, ultimately establishing reactor operating limits.

Pebble bed studies have also been performed to support nuclear reactor systems. The South African

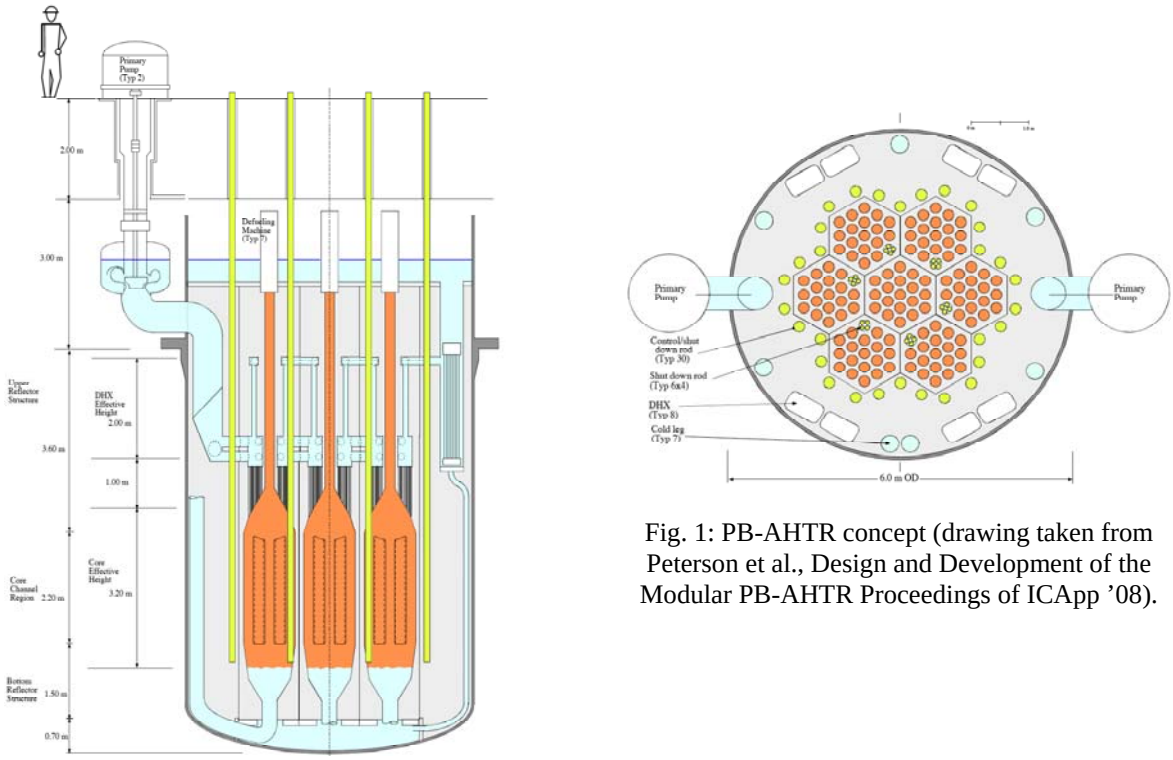

Fig. 1: PB-AHTR concept (drawing taken from Peterson et al., Design and Development of the Modular PB-AHTR Proceedings of ICApp '08).

pebble bed modular gas-cooled reactor project has performed pebble bed experiments that use electrical resistance heaters imbedded in a square-lattice pebble bed to apply the appropriate amount of bulk heating to the circulating helium [11]. Experimental efforts at UC-Berkeley supporting the PB-AHTR have concentrated on using commercial heat transfer oils as a low-temperature simulant for molten salt and have allowed relevant fluid and heat transfer system design experiments to be performed at low temperatures. Experiments using more prototypic materials, temperature, and fluid heating are the next major demonstration step in proving the viability and capabilities of this reactor concept and are needed to guide the design and prepare functional test and reliability data for reactor licensing.

The inductive heating techniques that we are using in this project will directly heat a prototypic randomly packed pebble bed geometry and will appropriately simulate the internal heating in a pebble-fueled reactor. Although inductive heating is a very common industrial heating method and is used in the foundry industries for melting metals, a very limited amount of work has been performed examining the use of inductive heating in "bed" type systems. The Japanese have examined the use of inductive heating for melting beds of scrap metal and have successfully applied this technique on an experimental level.

III. EXPERIMENTAL DESIGN

III.A. Loop Construction

Figure 2 shows a schematic of the loop. It consists of a sump-type pump, a test section containing the pebble bed to be tested, and an air-cooled heat exchanger. The loop and sump, except for the test section, is constructed of Inconel 600 selected for compatibility with molten fluoride salts, availability of required forms, and cost. Hastelloy N or MONICR are the preferred alloys; however, the limited availability of these alloys made it cost prohibitive for use in this project. The salt-containing portion of the loop is of all-welded construction where possible. Flanged connections, penetrations, and pump seals are at elevations above the salt level whenever feasible. Although the salt proposed for the PB-AHTR is FLiBe, the salt used in this experiment is FLiNaK in order to eliminate any safety issues that might arise due to the presence of beryllium. The loop is designed to supply a known flow rate and temperature of FLiNaK to the test section and operates at near atmospheric pressure. Lines are sloped to ensure salt draining and to allow a 100% salt fill of the loop. The loop uses an argon cover gas to prevent moisture and oxygen from entering the system. A small surge tank located at the top of the loop is used to allow vapor to be vented during loop fill and provide space for salt expansion and contraction during loop operation. A slight argon overpressure is maintained within the tank.

A centrifugal sump-type pump with an overhung impeller is used, eliminating the need for salt-wetted seals and salt-lubricated bearings. The pump is capable of supplying 0.125 MPa head, at 4.5 kg/s flow rate. The pump volute and impeller are machined from Inconel 600; a typical design is shown in Fig. 3 (this example is cast). The loop design uses a sump that houses both the pump and part of the test section and is sized sufficiently to hold the entire loop salt inventory. Both the sump and surge volumes contain a salt/argon interface. A pressurized argon gas system will be used to move the salt from the sump tank into the test section and loop piping as well as maintain loop pressure at a few kPa. An air-to-salt heat exchanger is used to remove heat added by the inductively heated test section. The heat exchanger is a two-row finned tube design with an outside surface area of 7.5 m^2 (including tubes). Cooling is supplied using a variable speed blower with a maximum volumetric flow of 2.8 m^3/s. A drawing of the heat exchanger is shown in Fig. 4.

Loop instrumentation includes salt temperature and pressure measurements, sump and surge volume salt levels, as well as measurement of the salt flow rate. Measurements inside the bed include salt temperatures and pebble temperature measurements made by inserting thermocouples through the test section flange and into the bed. The sumps and loop piping will be pre-heated using heating tape and blankets along with flexible insulation. Insulation is of sufficient thickness that steady-state heating requirements are minimized and do not interfere with heat-balance measurements at the test section and heat exchanger.

III.B. Test Section and Inductive Heating System

An inductive heating system provides volumetric heating in the pebble bed. The test section design uses a SiC flow channel and solid graphite pebbles as the susceptor. The SiC flow channel is 15 cm ID and has a 6.35 mm wall thickness. The 3 cm diameter pebbles are fixed in the flow channel using grids that extend from the flow diffuser at the entrance to the test section and above from the Inconel top flange. Approximately 600 pebbles form the bed. Twenty-four centimeters of bed height is used to condition the flow into the 24 cm long heated region. An additional 24 cm of bed height at the top

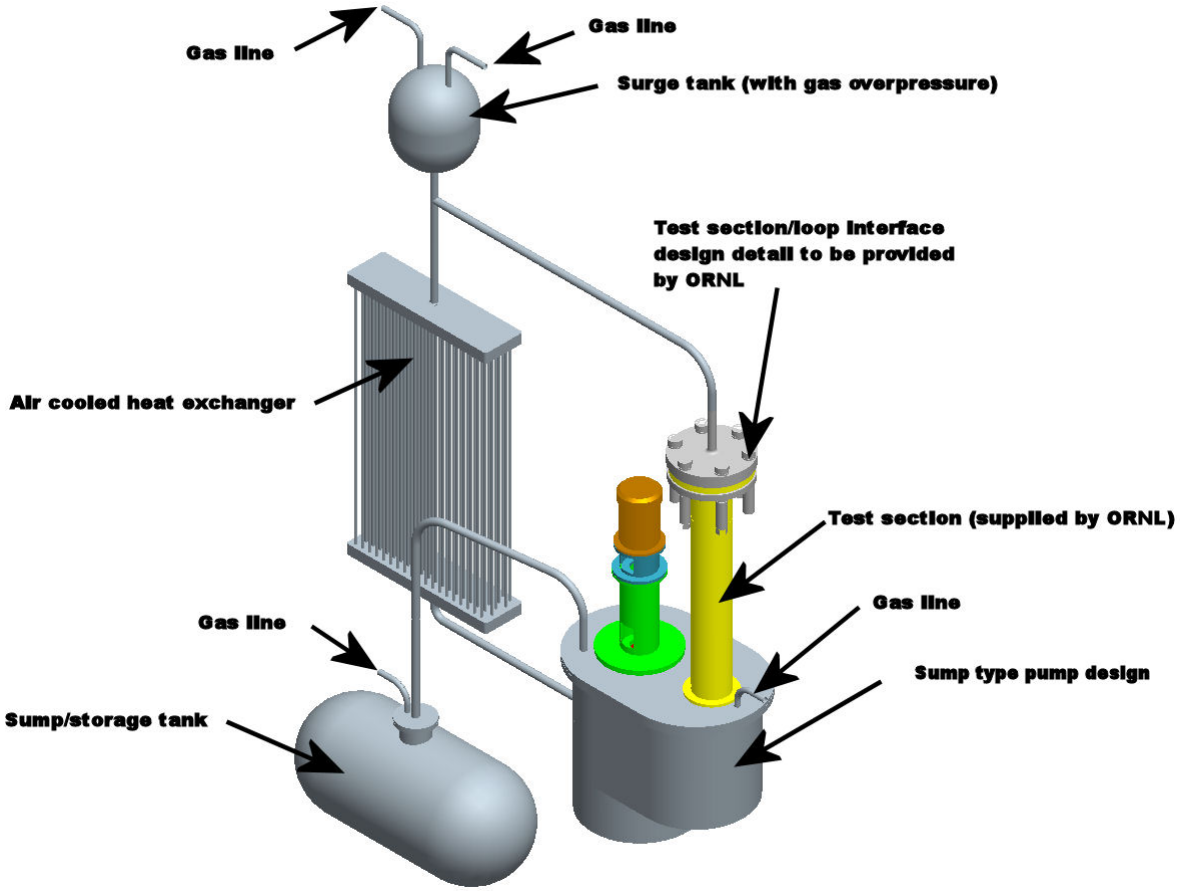

Fig. 2: Liquid salt loop schematic.

Fig. 3: Typical pump volute and impeller.

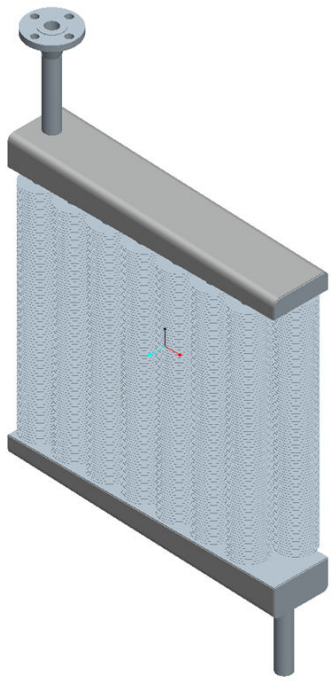

Fig. 4: Air-cooled heat exchanger.

of the heated bed region separates any metallic structures from the inductive heater. Figure 5 shows the test channel. The top of the SiC flow channel incorporates a flange which interfaces with the Inconel top flange using a Flexitallic gasket. This gasket is a spiral wound design using alternating spirals of grafoil and nickel. A secondary C-type gas seal surrounding the Flexitallic gasket is used to provide a sealed inert gas space between the Flexitallic and C seal for leak detection.

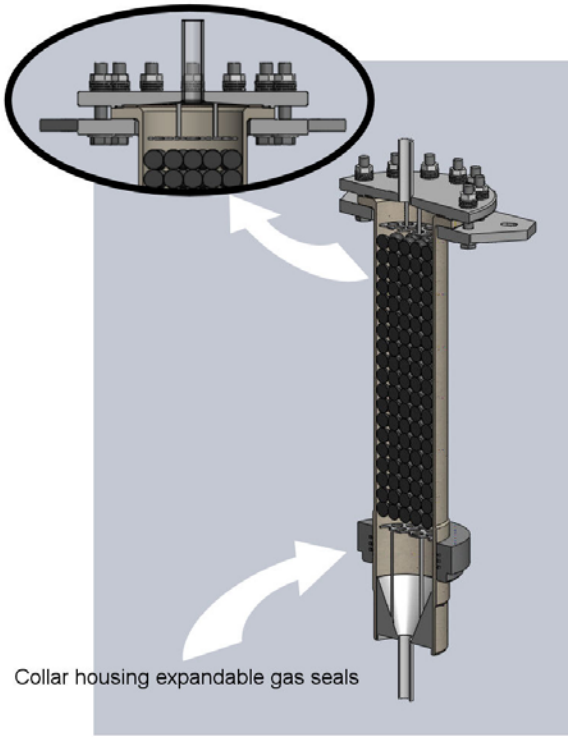

Fig.5: SiC test section showing detail of flange design.

A “piston-ring” type gas seal is used between the SiC test section and the top of the pump sump tank. This seal uses three split seal rings that are installed in circumferential grooves machined in a collar welded to the top of the pump sump. These rings compress around the circumference of the test section, preventing gas leakage between the collar and test section but allowing axial expansion of both the test section and sump tank.

An inductive power supply with a frequency of 30 kHz was selected that will provide 200 kW to the pebbles. There is approximately 90% coupling to the pebbles and test section. This includes 2–5% to the SiC flow tube and 7–14% to the FLiNaK salt. Two coil designs have been fabricated in order to evaluate the power supply coupling capability. One coil has a total of five turns, and one a total of six. Figure 6 shows the installed power supply system along with the walk-in hood used to enclose the FLiNaK test loop.

Fig. 6: Inductive heating power supply and hood.

III. PRELIMINARY TESTING

A series of static tests have been performed examining the compatibility of loop components with FLiNaK salt at 700°C. Testing has included Inconel 600, SiC, and the Flexitallic gasket that will be used to seal the SiC test section with the Inconel 600 loop. Results for 30, 60, and 90 day immersions have indicated that all of these components are suitable for long-term use in the convective test loop. The SiC and Flexitallic gasket showed no noticeable attack during these tests. The Inconel 600 showed a corrosion reaction with the FLiNaK salt, with an affected depth of approximately 250 μm for the 90 day test. Figure 7 shows an Inconel specimen after a 90 day exposure. The complete results of these tests are presently being documented and will be published in the near future.

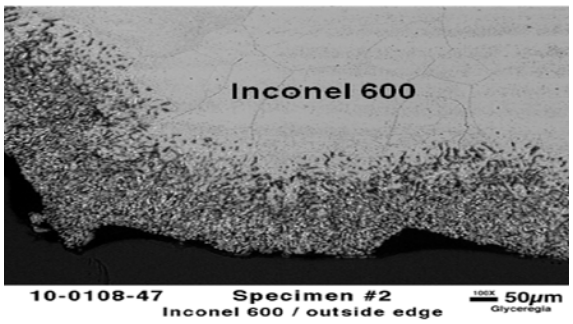

Fig. 7: Inconel specimen after 90 day exposure to 700°C FLiNaK salt.

Initial testing of the power supply was conducted at the manufacturer with both a five and six coil configuration. These tests used 3 cm diameter graphite rods in air as a dummy susceptor. The rods were housed in a pyrex container. Testing has indicated that the power supply operates as designed Figure 8 shows tests being run in air with the two test coils.

Fig. 8: Initial testing of the inductive power supply using five and six turn coils. Graphite heat load is glowing red.

Loop construction is expected to be complete in the fall of 2010, with heat transfer testing to be initiated immediately after.

IV. ACKNOWLEDGMENTS

This manuscript has been authored by UT-Battelle LLC under Contract No. DE-AC05-00OR22725 with the U.S. Department of Energy. The U.S. Government retains and the publisher, by accepting the article for publication, acknowledges that the U.S. Government retains a non-exclusive, paid-up, irrevocable, worldwide license to publish or reproduce the published form of this manuscript, or allow others to do so, for U.S. Government purposes.

V. REFERENCES

[1] P. Bardet et al., Design, Analysis and Development of the Modular PB-AHTR, Proceedings of ICAPP ’08, Anaheim, California, June 8–12, 2008.

[2] S. R. Greene, SMAHTR — A Concept for a Small Advanced High Temperature Reactor, Proceedings of HTR-10, Prague, Czech Republic, October 18–20, 2010.

[3] N. Wakao, Heat and Mass Transfer in Packed Beds, Gorden and Breach, Science Publishers, Inc., 1982.

[4] N. Kolev, Packed Bed Columns: For Absorption, Desorption, Rectification, and Direct Heat Transfer, Elsevier, 2006.

[5] S. S. Yee, K. Kamiuto, Combined Forced-Convective and Radiative Heat Transfer in Cylindrical Packed Beds with Constant Wall Temperatures, Journal of Porous Media 8, pp. 481–492, 2005.

[6] B. P. Singh, M. Kaviany, Modeling of Radiative Heat Transfer in Packed Beds, International Journal of Heat and Mass Transfer 35, pp. 1397–1405, 1992.

[7] K. Ridgway, J. Tarbuck, Voidage fluctuations in randomly-packed beds of spheres adjacent to a containing wall, Chemical Engineering Science 23, pp. 1147–1155, 1968.

[8] J. D. McWhirter, M. E. Crawford, D. E. Klein, Wall Region Porosity Distributions for Packed Beds of Uniform Spheres with Modified and Unmodified Walls, Transport in Porous Media 27, pp. 99–118, 1997.

[9] V. S. Travkin, K. Hu, I. Catton, Turbulent Kinetic Energy and Dissipation Rate Equation Models for Momentum Transport in Porous Media, Proceedings of the 3rd ASME/JSME Joint Fluids Engineering Conference, San Francisco, pp. 1–7, July 1999.

[10] M. H. J. Pedras, M. J. S. de Lemos, On the Definition of Turbulent Kinetic Energy for Flow in Porous Media, International Communications in Heat and Mass Transfer 27, pp. 211–220, 2000.

[11] H. F. Nielsen, The SANA-I Experiment for Self-Operating Removal of Afterheat, IAEA Research Coordination Meeting on Heat Transport and Afterheat Removal for Gas-Cooled Reactors Under Accident Conditions, November 1993.