Training, Research, and Test Reactors (RERTR) 2010
Knoxville, Tennessee, USA, September 19-23, 2010

Reference (Axially Graded) Low Enriched Uranium Fuel Design for the High Flux Isotope Reactor (HFIR)

R. T. Primm, III[a] and Germina Ilas[b]
[a] Research Reactors Division
[b] Nuclear Science and Technology Division
Oak Ridge National Laboratory
P.O. Box 2008; Oak Ridge, Tennessee 37831-6399
primmrtiii@ornl.gov, ilasg@ornl.gov

ABSTRACT

During the past five years, staff at the Oak Ridge National Laboratory (ORNL) have studied the issue of whether the HFIR could be converted to low enriched uranium (LEU) fuel without degrading the performance of the reactor. Using state-of-the-art reactor physics methods and behind-the-state-of-the-art thermal hydraulics methods, the staff have developed fuel plate designs (HFIR uses two types of fuel plates) that are believed to meet physics and thermal hydraulic criteria provided the reactor power is increased from 85 to 100 MW. The paper will present a defense of the results by explaining the design and validation process. A discussion of the requirements for showing applicability of analyses to approval for loading the fuel to HFIR – lead test core irradiation currently scheduled for 2016 – will be provided. Finally, the potential benefits of upgrading thermal hydraulics methods will be discussed.

Keywords: HFIR, LEU, fuel conversion, neutronics, thermal hydraulics, U/Mo, foil

1. INTRODUCTION

Under the sponsorship of the National Nuclear Security Administration (NNSA), studies have been conducted to determine if HFIR can be converted from high enriched uranium (HEU) fuel to low enriched uranium (LEU). Studies included reactor physics, thermal hydraulics, and a determination of a potential fabrication process. The previous research reactor design project conducted by staff at ORNL was the Advanced Neutron Source Reactor (a next generation research reactor that was canceled in 1995). While staff at the ORNL spent some 10 years in the design of the Advanced Neutron Source (ANS), that design was based on neutronics methods, thermal hydraulics methods, and fuel fabrication techniques that were essentially unchanged since the design of HFIR in the early 1960s.[1, 2, 3, 4] In order to meet the NNSA goal for LEU conversion of "no degradation to reactor performance due to enrichment conversion" and the operational, economic goal of minimizing fuel cycle costs, improvements in all three areas from the methods used for the ANS were required. The improvements in methods made to date (and subsequent analyses) are believed sufficient to demonstrate that conversion of HFIR to LEU fuel is, in theory, possible without degradation of performance given that reactor operating power is increased to 100 MW. Justification of this conclusion is the subject of this paper.

1.1. Brief Description of the High Flux Isotope Reactor

The High Flux Isotope Reactor, located at the Oak Ridge National Laboratory, is a versatile flux trap type research reactor. The primary function of HFIR is cold and thermal neutron scattering, but it is also capable of isotope production, materials irradiation, and neutron activation analysis. This pressurized,

beryllium reflected, light water-cooled and –moderated reactor utilizes high enriched uranium (approximately 93 wt. % ^{235}U) in the form of U_3O_8-Al to produce 85 MW of power. The flux trap, which is about 13 cm in diameter and can hold up to 37 target rods, is located in the center of the core where fast neutrons that leak from the fuel are moderated to produce high epithermal and thermal neutron fluxes. Currently the central target is configured with one hydraulic tube allowing for samples to be loaded and extracted while the reactor is operating.

On the outside of the flux trap are two concentric fuel annuli, the inner fuel element and the outer fuel element, each composed of involute fuel plates that are 1.27 mm thick and separated by 1.27 mm thick coolant channels. The coolant is light water. The active fuel height is 50.8 cm and the outer diameter of the outer fuel element is about 42 cm. The fuel and burnable poison in the form of B_4C (only in the inner fuel element) are non-uniformly distributed along the arc of the involute fuel plates to minimize power peaking and are sandwiched between two Al-6061 plates (clad). A total core loading of approximately 9.4 Kg of ^{235}U is dispensed in the 540 fuel plates.

On the outside of the fuel are two concentric, annular control elements that contain Al, Ta-Al, and Eu_2O_3 absorbing sections. The outer "cylinder" is composed of four safety plates and the inner cylinder provides for regulation of operating power. A beryllium reflector of about 30 cm thickness is used to reflect neutrons back to the fuel elements and to house numerous experimental facilities. A "mock-up" of the HFIR core configuration is shown in Fig. 1.

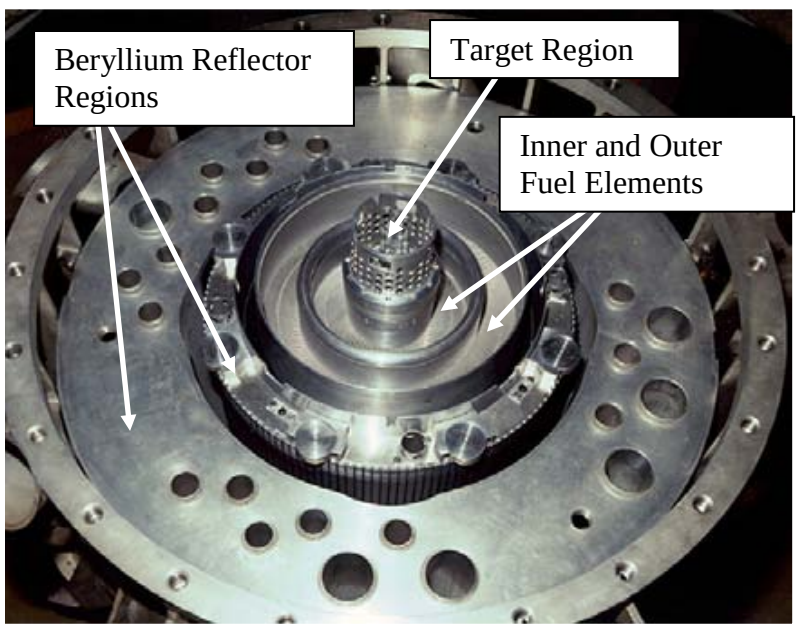

Fig. 1. HFIR core and reflector.

1.2. Limitations of the LEU conversion studies

Schedule-to-convert and cost-to-convert were items that limited the scope of the LEU conversion study. Conception-to-full-power for the currently-operating HFIR took almost nine years.[5] T. E. Cole, formerly of ORNL, reported to the first author that the HFIR project cost was approximately $30,000,000 – equivalent to $270,000,000 today at an escalation rate of 5% per year. The Advanced Neutron Source

project produced a reactor design estimated to cost 2.6 billion dollars (1993) with an estimated 9 years to completion following start of construction.[6] These schedules and resource requirements precluded consideration by NNSA of construction of a new, HFIR-like reactor fuelled with LEU. The close-fitting HFIR components shown in Fig. 1, the cost of a new beryllium reflector and beam tube replacement ($10,000,000 in the late 1990s), the configuration of the HFIR beam tubes in and beyond the beryllium reflector (neutron scattering research now being the principal sponsor for HFIR), and the need to maintain the central target region for californium production left only the fuel elements available for modification under fuel conversion.

Fig. 2 is a schematic of HFIR inner and outer fuel plates that compose the inner and outer fuel elements shown in Fig. 1. The filler region (non-fuel) in the inner element contains a small amount of boron for the purpose of power redistribution at beginning-of-cycle.

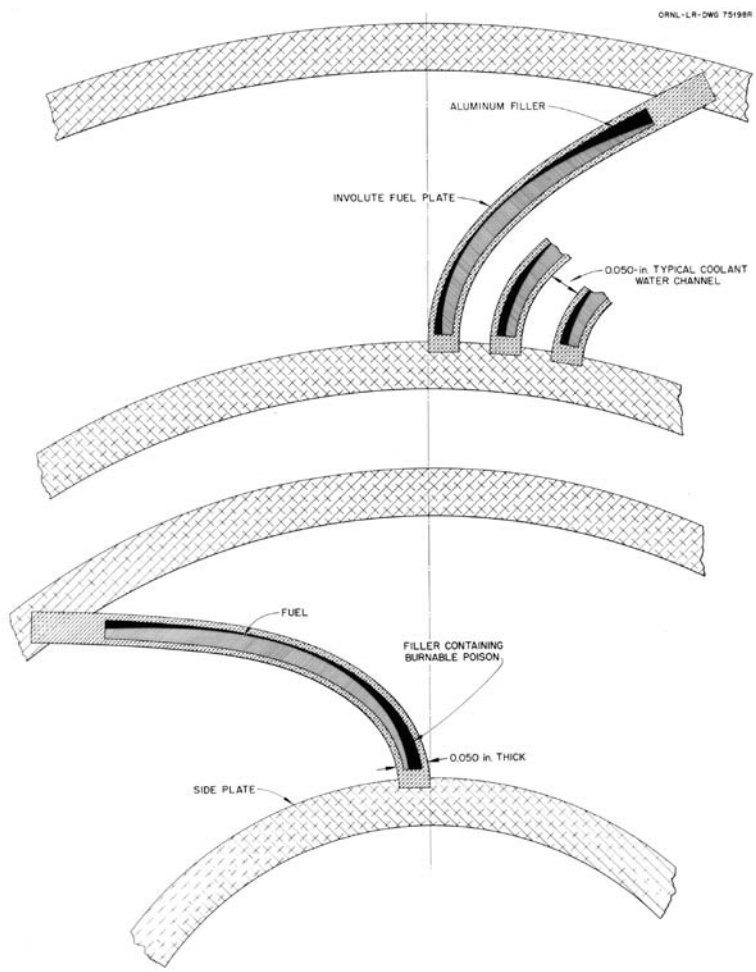

Fig. 2. Schematic of fuel configuration inside inner and outer element fuel plates

Change in enrichment from 93 wt. % to 20 wt. % would increase the core uranium loading from 10.1 kg to 47 kg even if the critical mass of ^{235}U remained unchanged under conversion (which it does not). Physics studies, described in Ref. 7, determined that an increase in critical mass of ^{235}U from 9.4 kg to 25 kg was needed in LEU fuel due to the poisoning effect of ^{238}U. Given the constraints of plate geometry (from Figs. 1 and 2) and the requirement to preserve "operation time-per-cycle to the

experimenter" (reactivity requirement), the densest available fuel had been shown to be needed.[8] Density requirements and stability-under-irradiation led to the choice of U-10Mo, uranium metal alloyed with molybdenum with the Mo composing 10% by weight of the mixture.

Two variables not considered in HFIR LEU design studies were fuel plate thicknesses and water channel thicknesses (shown in Fig. 2). Multiple reasons justified the exclusion of studies of these variables.

The power density in a reactor is limited by the ability to remove heat. Heat removal is maximized by maximizing the surface-to-volume ratio of the fuel bearing region of the reactor. Minimizing the fuel plate thickness maximizes the surface-to-volume ratio. Hence in a high power density reactor, one would not want to increase plate thickness from the current value. A review of the current HFIR HEU fuel loading profile reveals that a thickness less than 1.27 mm (50 mils) would not provide sufficient volume for the optimal HEU fuel grading profile.[1] The Advanced Neutron Source Reactor also was to be fuelled with 1.27 mm plates.[2] As U-10Mo is stiffer than the current HEU_3O_8/Al composite, it led to speculation that U-10Mo plates thinner that 1.27 mm might be equivalent in strength to the current, HEU-fuelled plates. However, no data exist to certify that a U-10Mo-bearing plate thinner than the current HEU HFIR design would not result in a reduction in a safety margin. Thinner plates with the same channel thickness would yield a reduced flow velocity through the core assuming that mass flow rate in the HFIR is unchanged under conversion (no replacement of pumps). Lack of test data, program schedule, cost, manufacturing uncertainty, and programmatic objectives to minimize capital expenditures for conversion of HFIR led to the exclusion of plate thickness as a variable for study. While HFIR staff have excluded plate thickness as a variable, it is noteworthy that staff at the University of Missouri reactor (MURR) have proposed an LEU plate thickness of 0.965 mm (38 mils), significantly less than plates employed in the current, HEU HFIR fuel. The MURR coolant pressure is much less than that of HFIR (80 versus 468 psia) and the flow velocity is also less (7.1 versus 15 m/s).

Reducing the coolant channel thickness from the current HFIR value could increase neutron leakage, possibly mitigating the reduction in neutron leakage from the core due to the denser U-10Mo fuel. However a reduced channel thickness would increase the pressure drop across the core, potentially lowering the safety margin (margin to incipient boiling) from the current value and could therefore be unacceptable (current system pressure is set by pressure vessel life/embrittlement). Increasing the coolant thickness from the current value would reduce the available volume for fuel, therefore increasing the fuel content in each 1.27 mm plate and potentially increasing local power densities to unacceptable levels. Furthermore, the increased quantity of water inside the core would act to trap neutrons in the core rather than allow them to escape to the central target and beam tubes. Both the magnitude and spectra of neutrons leaking from the core would be affected. These considerations along with the lack of fabrication experience and the lack of flow test data for HFIR geometry at coolant channel thicknesses different from 1.27 mm led to the exclusion of the channel thickness as a variable for study.

Combinations of plate and channel variations exhibit the same detriments as examining each of them individually while exacerbating the cost and time of LEU studies. Nevertheless, the authors acknowledge that it is possible that an optimization study could reveal a fuel design with plate and channel thicknesses differing from 1.27 mm that would provide a reduced uranium inventory. Whether the revised design would maintain current HFIR safety margins and maintain neutron flux and spectra at central target and beam tube locations and whether the reduction in fuel inventory would compensate in economic savings for potentially increased fabrication costs are all beyond the scope of studies funded to date.

The design study for an LEU-fuelled HFIR was restricted to the shapes of the fuel region contours shown in Fig. 2. New fuel profiles had to be determined for a U-10Mo fuel in existing HFIR geometry under the

requirement of providing the same neutron flux performance as exists in the HFIR today (high enriched uranium fuel at a power level of 85 MW). The equivalent neutron flux had to be provided without degradation in safety margins.

1.3. The reference LEU fuel plate designs

Physics studies to determine the fuel profiles for LEU are discussed in Ref. 9. The fuel grading profiles that minimize local power peaking in the reactor core are shown in Fig. 3. To maintain flux parity with the current HEU fuel cycle, reactor power must be increased from the current value of 85 MW to 100 MW. To maintain safety margin (margin to incipient boiling) at the higher power, LEU fuel regions must be axially tapered at the base of the plates. (HFIR employs down-flow of coolant and thus the minimum margin to incipient boiling occurs at the base of the core.) A schematic of this tapering is shown in Fig. 4. The minimum fuel thickness shown in Fig. 4 is 75 microns (3 mils).

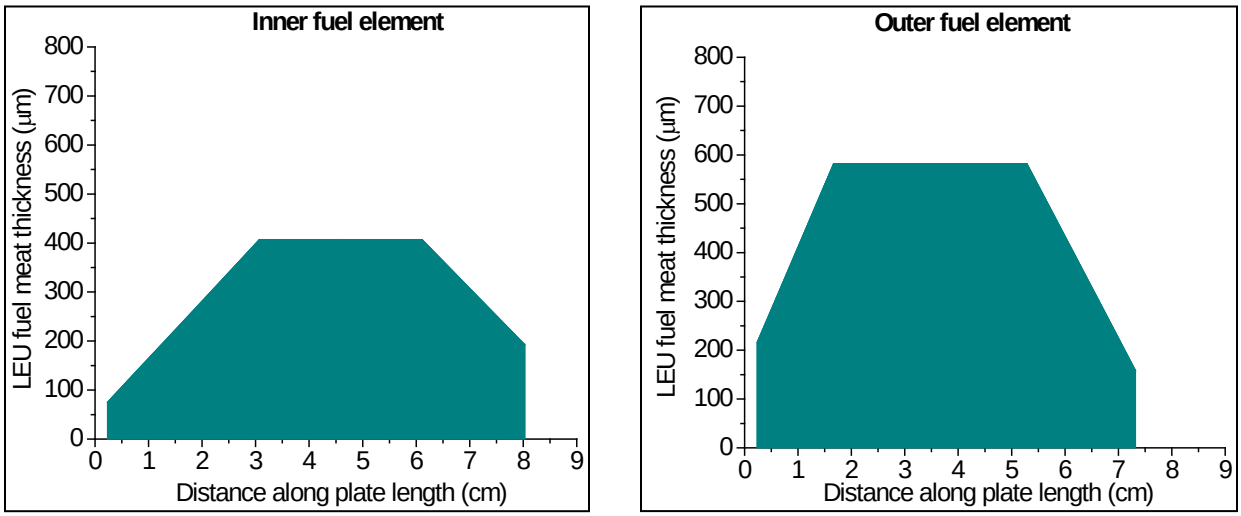

Fig. 3. Radial fuel thickness profiles inside HFIR fuel plates (U-10Mo replacement for fuel region shown in Fig. 2)

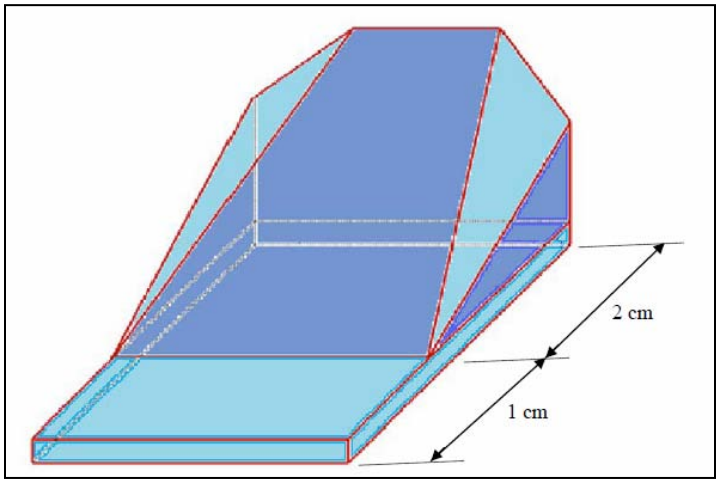

Fig. 4. Axial grading profile for LEU fuel (0-3 cm from the bottom of each fuel element plate)

To avoid interaction between U/Mo and Al and subsequent swelling under irradiation, the U-10Mo metal is surrounded by a thin, zirconium layer. Both inner and outer fuel plates are clad with 6061 aluminum having a thickness of 0.254 mm (10 mils). The aluminum clad would be in contact with the zirconium diffusion barrier layer on one "face" of the fuel. An aluminum "filler" region exists on the opposite fuel face between the zirconium layer and the aluminum clad. In the inner element plate, this filler region is composed of borated aluminum; the boron needed as a burnable poison to shift power from the inner element to the outer element at beginning-of-life. As noted in Ref. 9, the reference fuel plate designs coupled with an increase in reactor power to 100 MW led to neutron fluxes in the HFIR target and reflector that fulfilled the requirement that the HFIR performance is not degraded by conversion to LEU fuel.

2. ACCEPTABILITY OF REACTOR PHYSICS ANALYSES

Original[1] and updated[10] analyses of HFIR with HEU fuel, Advanced Neutron Source Reactor analyses[2] and even early HFIR LEU analyses[11, 12] relied on diffusion theory/depletion methods. Comparisons of these methods to experimental measurements always yielded significant deviations between measured local power densities and calculated values, but the need to perform full fuel cycle analyses (depletion calculations) and the computer hardware available in the past precluded the use of more accurate methods.

Software and hardware advances have enabled HFIR staff to make use of the most accurate reactor physics computational methods available to design LEU fuel. Monte Carlo methodology (as embodied in the MCNP[13] code) coupled with depletion methodology (the ORIGEN-2 code[14] as embodied in the ALEPH[15] and VESTA[16] programs) allows for exact geometric representation of the HFIR core, enables modeling of control element movement, utilizes continuous-energy representation of nuclear data (ENDF/B-VII data for LEU design), and allows for time-dependent tracking of nuclide production and destruction. It is noteworthy that the Advanced Neutron Source Project was the first program to sponsor the development of Monte Carlo based depletion methods (the MOCUP program[17]) though software and hardware limitations of the early 1990's limited the usefulness of the methodology.

During the past five years, ORNL staff have validated the MCNP methodology and HFIR model by comparison of calculated physics parameters to measured values for neutron flux[18], reactivity insertions[19], critical control element positions and power distributions[20], end-of-life spatially-dependent uranium isotope concentrations[21], prediction of californium production rate,[22] and operating cycle length[7]. Agreement has been found to be within measurement uncertainty. All of these measurements were performed with HEU fuel but, as noted above, the LEU reactor geometry and the current geometry are the same. Consequently, the computational geometry model for MCNP for LEU fuel is the same (or nearly so) as for the HEU comparisons. Thus there is a high degree of confidence in the development of the computational model and for the nuclear data for those constituents of the model that are unchanged from HEU to LEU.

Isotopic change due to irradiation – the generation of plutonium and fission products in the reactor core – introduces uncertainties in reactivity and radiation source terms that cannot be quantified by HFIR HEU measurements. While U-10Mo fuel data are lacking, 20% enriched uranium silicide physics measurements are available[23] for both fresh and irradiated fuel and indicate no troublesome biases though the computational methodology reported is quite different from that used in current studies and the neutron spectrum during irradiation differed from that expected to exist in LEU fuel in HFIR.

Maintaining current HFIR geometry, modeling with state-of-the-art computational methods, modeling time dependent conditions in the reactor, using continuous energy nuclear data representations, and benchmarking with available HFIR HEU measurements are the foundation for HFIR LEU conversion physics analyses. The excellent agreement between measured and calculated physics parameters – reported in the previously cited references – led the authors to the conclusion that LEU physics parameters could be predicted to within the experimental uncertainties for HEU measurements. However, due to the magnitude of the investment in HFIR (refer to replacement costs mentioned earlier) these physics parameters would have to be confirmed with low-power critical experiments as occurred at the startup of HFIR.[1]

3. ACCEPTABILITY OF THERMAL HYDRAULIC ANALYSES

With narrow coolant channels and the high heat flux that exists in HFIR (as high as 300 W/cm^2 in some locations in the core), boiling of the coolant would lead almost immediately to fuel damage. The upper limit for the reactor power level is defined as the maximum power level at which none of the local heat fluxes in the fuel elements exceed burnout heat fluxes. Continuous operation at maximum power is not feasible as any minor system perturbation could lead to fuel failure. Operating power is set so that system perturbations as well as variability in fuel fabrication, instrument noise and uncertainty can be accommodated without damaging the fuel. This operating power is derived from the HFIR Technical Safety Requirement that stipulates a “measured-flux-to-measured-flow ratio limiting control setting” of 1.3 times the normal operating power level. Thus the reactor should be able to operate at 130% of its normal power level for short periods of time without any local boiling (damage to the fuel elements).

The technical safety requirement on “flux-to-flow” was maintained in LEU design studies with the HFIR operating power set at a value equal to the calculated burnout-heat-flux-operating-power divided by 1.3. The HFIR burnout-heat-flux-operating-power for either HEU or LEU fuel is calculated with custom-designed software written at the time HFIR was constructed.[24] Approximations in the code include heat conduction in only one direction (from fuel plate to water, no conduction along the span of the plate as shown in Fig. 2 nor axially along the plate) and only one “node” in the conduction direction (heat flux from the plate into the bulk water). The code calculation proceeds “from the clad surface out”. Since both HEU and LEU fuel are clad with Al-6061 and heat conduction in the fuel region is not modeled, the methodology is applicable to either fuel type (with some caveats noted subsequently).

The code allows for a two-dimensional power profile (axially and along the span of a plate). Calculations for LEU fuel were based on time-dependent VESTA (MCNP-5 coupled with ORIGEN-2) power profile calculations discussed previously. Minor modifications were required to the steady state heat transfer code in order to study LEU fuel designs. The code was modified to allow for finer radial and axial mesh structure than had been originally coded. The use of reactor physics Monte Carlo-derived zone power densities required minor changes in the code input as the original code version was based on inputting a mesh point (rather than volume) power density profile.

Water temperature from one node is the boundary condition for the node below it but an insulating boundary exists between span-wise adjacent nodes (no fluid mixing spanwise). The program allows for time-dependent changes in power distribution and tracks position-dependent oxide growth on the aluminum clad as a function of time. Manufacturing/instrumentation variances that impact heat generation and/or conduction are input to the code and include fuel segregation, fuel distribution, fuel loading uncertainty, fuel plate bowing/buckling, and power detector uncertainty. These parameters along with oxide growth impact the effective thickness of the coolant channel. Radiation swelling as a function

of irradiation time is incorporated into the channel gap thickness calculation though the correlations encoded are only applicable to U_3O_8/Al fuel.

Many assumptions/input to the HFIR steady state heat transfer code are the same for LEU fuel as for HEU fuel. These include HFIR flow channel and plate thicknesses, cladding material, coolant pressure, velocity, and inlet temperature. It was the thermal hydraulic analyses with the steady state heat transfer program that led to the requirement for axial as well as radial grading of the LEU fuel (shown in Figs. 3 and 4) whereas the current, HEU fuel has only radial grading.

Though the steady state heat transfer code does not model the fuel region, those thermal hydraulic aspects of LEU fuel that potentially differ from HEU fuel and which would therefore require modification of the program are those related to the U/Mo material. Radiation induced swelling, thermally induced deflection (both from the welding process in element fabrication and from irradiation in the reactor), and flow induced vibration are phenomena in which response from a U/Mo metal alloy fuel could differ significantly from the current U_3O_8/Al compact. If the impact on coolant gap thickness of these phenomena can be shown to be similar to or less than that of HEU fuel, then the HFIR steady state heat transfer program should be applicable to LEU thermal hydraulic studies. In the absence of data, the assumption was made that HEU fuel bounds LEU fuel and the HFIR steady state heat transfer code was used for the LEU design.

4. ACCEPTABILITY OF FABRICABILITY OF THE FUEL

The sequence of manufacturing steps to produce HFIR LEU plates has been outlined in a previous publication.[25] Work continues to define this reference flow sheet. The basic steps are 1) create uranium/molybdenum alloy ingots in large quantities with consistent and uniform properties, 2) use a contoured rolling mill to create U-10Mo foils of the shapes shown in Fig. 3 (one contour roller for the inner element foil, a second for the outer element foil), 3) trim foils to correct length and width and machine the shape shown in Fig. 4 on the lower edges of the inner and outer element plate foils, 4) procure 0.0254 mm (1 mil) sheets of zirconium, 5) procure borated Al sheets for inner element plates and Al-6061 sheets (0.254 mm thick [10 mils]) for clad for both types of plates, 6) use hot isostatic presses (HIP) to join, in order from bottom to top, Al clad, Zr diffusion barrier sheet, U/Mo foil, Zr diffusion barrier sheet, borated Al sheet if inner plate, and finally the top Al clad. Trimming of edges would yield a finished flat plate that would be subsequently processed in the same or similar manner as current, HEU fuel plates.

Fig. 5 provides an illustration of the fabrication steps. U-10Mo fuel has been used in research reactors, notably the Health Physics Research Reactor formerly operated at ORNL. Contoured rolls for rolling mills are commercially available. Machining a metal edge to 0.1016 mm (4 mils) is found in commercially available razor blades. Zirconium and borated aluminum sheets are commercially available. Large scale, industrial HIPs can be purchased. Machining to “flat finish” tolerances currently established for HEU fuel plates is also a commercial operation.

The fabrication steps for the LEU fuel are known to be available. For the LEU design studies, it has been assumed that LEU production methods will meet geometric and material tolerances achieved with the current HEU fuel. The uncertainties and variability in fabrication dimensions, acceptability of bonding between layers both before and after forming an involute shape, and the degree of homogeneity of the U-10Mo alloy are all currently unknown and must be addressed in a manufacturing test program to verify that the assumptions made in the LEU design were valid (some studies of the nature and number of tests are discussed in Ref. 26).

Fig. 5. Technologies that must be combined to produce U/Mo fuel plates

a) Health Physics Research Reactor fuelled with U-10Mo alloy

b) Contoured rolling of U/Mo foil

c) Placing "Razor" edge on bottom of U/Mo foil

d) Fabricate thin Zr foil for diffusion barrier

e) Borated Al for inner plate

f) Hot isostatic pressing of U/Mo, Zr, Al clad and borated Al if inner plate

g) Since U/Mo foil is contoured, top of pressed plate must be machined to be flat

5. CONTINUING METHODS DEVELOPMENT TO SIMPLIFY FABRICATION

Though the subject of this paper is a discussion of reference (axially graded), LEU fuel plate designs for HFIR, brief mention will be made of on-going work in thermal hydraulic analyses. It was noted in Section 2 that advanced reactor physics methods – not used previously at ORNL for any research reactor design or analyses – were needed to obtain accuracy and therefore confidence in reactor design in lieu of any experimental data for LEU fuel. In Section 3, limitations of the HFIR steady state heat transfer code were noted. These limitations contributed to the requirement for axial grading.

Currently studies are underway to employ advanced thermal hydraulic methods - three dimensional, finite element, multi-physics computer programs - to account for heat conduction in all directions and to allow for turbulent mixing of HFIR coolant as it flows through the reactor. Both of these phenomena act to distribute heat and lower local surface temperatures from values that are calculated by the steady state heat transfer code. A goal of future studies is to determine if fabrication step c) in Fig. 5 (the axial grading shown in Fig. 4) can be eliminated by improving the accuracy of thermal hydraulic calculations. If so, then a second modification might be to co-roll the Zr diffusion layer with the U/Mo ingot thereby providing a “surface barrier” if foil production and HIP processing occur at separate physical locations.

6. CONCLUSIONS

A combination of engineering, economic, and schedule considerations led the HFIR LEU conversion effort to be limited to consideration of changes to the interior of the inner and outer element fuel plates. Reactor physics methods used in the LEU design provide the finest detail possible in geometric modeling and nuclear data representation. The methods selected have been benchmarked with available HFIR HEU data. Thermal hydraulic analyses, while limited to one dimensional heat transport – are generally robust to the change in fuel types yet some experimental needs have been identified. Fabrication processes for the LEU fuel have been identified and stepwise, each component of the process is commercially available or has been performed in the past. Thermal hydraulics analyses will be enhanced through the utilization of modern, multi-physics methods and these methods could lead to simplification or removal of steps in the fabrication process. Further demonstration of the acceptability/accuracy of all three areas – physics, thermal hydraulics, and fabrication - awaits the provision of experimental/process measurements.

7. REFERENCES

1. R. D. Cheverton and T. M. Sims, *HFIR Core Nuclear Design*, ORNL-4621, Oak Ridge National Laboratory, Oak Ridge, Tennessee, July 1971.
2. J. C. Gehin, et. al., *Reactor Physics Methods, Models, and Applications Used to Support the Conceptual Design of the Advanced Neutron Source*, ORNL/TM-12966, Oak Ridge National Laboratory, Oak Ridge, Tennessee, August, 1995.
3. G. L. Yoder, *Steady-state Thermal-hydraulic Design Analysis of the Advanced Neutron Source Reactor*, ORNL/TM-12398, Oak Ridge National Laboratory, Oak Ridge, Tennessee, May 1996.
4. B. W. Pace and G. L. Copeland, *Fabrication Development for the Advanced Neutron Source Reactor*, ORNL/TM-13070, Oak Ridge National Laboratory, Oak Ridge, Tennessee, August 1995.
5. F. T. Binford, T. E. Cole, and E. N. Cramer, *The High Flux Isotope Reactor, A Functional Description*, ORNL-3572 (Rev. 2), Oak Ridge National Laboratory, Oak Ridge, Tennessee, May 1968.
6. ORNL/ANS/INT-34/S3/V1/RA, *Cost and Schedule Document*, Document-Type 1, published on ANS compact disk, 1995.
7. R. T. Primm III, David Chandler, G. Ilas, B. C. Jolly, J. H. Miller, and J. D. Sease, *Design Study for a Low-Enriched Uranium Core for the High Flux Isotope Reactor, Annual Report for FY 2008*, ORNL/TM-2009/87, March 2009.
8. S. C. Mo and J. E. Matos, *A Neutronic Feasibility Study for LEU Conversion of the High Flux Isotope Reactor (HFIR)*, Proc. 1997 International Meeting on Reduced Enrichment for Research & Test Reactors, Jackson Hole, Wyoming, USA, October, 1997.
9. Germina Ilas and R. T. Primm, III, *Fuel Grading Study on a Low-Enriched Uranium Fuel Design for the High Flux Isotope Reactor*, ORNL/TM-2009/223R1, March 2010.
10. R. T. Primm, III, *Reactor Physics Input to the Safety Analysis Report for the High Flux Isotope Reactor*, ORNL/TM-11956, Oak Ridge National Laboratory, Oak Ridge, Tennessee, March 1992.
11. R. T. Primm III, R. J. Ellis, J. C. Gehin, K. T. Clarno, K. A. Williams, and D. L. Moses, *Design Study for a Low-Enriched Uranium Core for the High Flux Isotope Reactor, Annual Report for FY 2006*, ORNL/TM-2006/136, November 2006.
12. R. T. Primm III, R. J. Ellis, J. C. Gehin, G. Ilas, J. H. Miller, and J. D. Sease, *Design Study for a Low-Enriched Uranium Core for the High Flux Isotope Reactor, Annual Report for FY 2007*, ORNL/TM-2007/45, November 2007.
13. X-5 Monte Carlo Team, *MCNP—A General Monte Carlo N-Particle Transport Code, Version 5*, LA-CP-03-0245, Los Alamos National Laboratory (2003).
14. ORIGEN-2 RSICC Computer Code Collection CCC-371, ORIGEN 2.2. Available from RSICC, Oak Ridge National Laboratory (2002).
15. W. Haeck, *An Optimum Approach to Monte Carlo Burnup*, Ph.D. thesis, Ghent University, Belgium (2007).
16. W. Haeck, *VESTA User's Manual, Version 2.0.0*, DSU/SEC/T/2008-33, IRSN, September 16, 2009.
17. R. S. Babcock, D. E. Wessol, and C. A. Wemple, *MOCUP: MCNP-ORIGEN2 Coupling Utility Programs*, Trans. Am. Nucl. Soc. **69**, 470 (1993).
18. D. E. Peplow, *A Computational Model of the High Flux Isotope Reactor for the Calculation of Cold Source, Beam Tube, and Guide Hall Nuclear Parameters*, ORNL/TM-2004/237, Oak Ridge National Laboratory, Oak Ridge, Tennessee, November 2004.
19. C. O. Slater and R. T. Primm III, *Calculation of Rabbit and Simulator Worth in the HFIR Hydraulic Tube and Comparison with Measured Values*, ORNL/TM-2005/94, Oak Ridge National Laboratory, Oak Ridge, Tennessee, September 2005.

20. D. Chandler, R. T. Primm, III, G. I. Maldonado, *Validating MCNP for LEU Fuel Design via Power Distribution Comparisons*, ORNL/TM-2008/126, Oak Ridge National Laboratory, Oak Ridge, Tennessee, November 2008.
21. D. Chandler, R. T. Primm, III, and G. I. Maldonado, *Validation of a Monte Carlo Based Depletion Methodology with HFIR Post-Irradiation Examination Data*, ORNL/TM-2009/123, July 2009.
22. D. Chandler, R. T. Primm, III, and G. I. Maldonado, *HFIR Post-Irradiation Curium Target Rod Nuclide Inventory Calculations*, Trans. Am. Nuc. Soc., Vol. 102, pp 560-561, June 2010.
23. M. M. Bretscher and J. L. Snelgrove, *The Whole-Core LEU U_3Si_2-Al Fuel Demonstration in the 30-MW Oak Ridge Research Reactor*, ANL/RERTR/TM-14, Argonne National Laboratory, July 1991.
24. H. A. Mclain, *HFIR Fuel Element Steady State Heat Transfer Analysis*, Revised Version, ORNL/TM-1904, Oak Ridge National Laboratory, 1967, as appended by T. E. Cole, L. F. Parsly, and W. E. Thomas, *Revisions to the HFIR Steady State Heat Transfer Analysis Code*, ORNL/CF-85/68 (1986).
25. J. D. Sease, R. T. Primm III, and J. H. Miller, *Conceptual Process for the Manufacture of Low-enriched Uranium/Molybdenum Fuel for the High Flux Isotope Reactor*, ORNL/TM-2007/39, September 2007.
26. R. T. Primm III, David Chandler, J. D. Freels, T. Guida, G. Ilas, B. C. Jolly, J. H. Miller, and J. D. Sease, *Design Study for a Low-Enriched Uranium Core for the High Flux Isotope Reactor, Annual Report for FY 2009*, ORNL/TM-2009/313, February 2010.