HFIR dpa-Rate Calculations Using Hybrid Monte Carlo/Discrete Ordinates

Edward D. Blakeman

Oak Ridge National Laboratory, MS 6172, P.O. Box 2008, Oak Ridge, TN 37831 blakemaned@ornl.gov

INTRODUCTION

The vessel integrity analysis program to assess radiation-induced embrittlement of the High Flux Isotope Reactor (HFIR) vessel, requires the calculation of neutron and gamma displacements per atom (dpa) at high radiation-streaming locations adjacent to or near the beam tube nozzles. Until now, the calculations have been performed using the DORT and TORT discrete ordinates (DO) codes. Calculated dpa-rate values are normalized by dosimetry results obtained from surveillance capsules and the normalized values are used for damage-assessment analyses. This approach has proved suitable. However, improved calculations are now possible using a hybrid Monte Carlo (MC) & DO approach. Specifically, the MCNP code is used in conjunction with the CADIS (Consistent Adjoint Driven Importance Sampling) [1] method and automated within SCALE using the ADVANTG [2] code. A significant advantage of a MC vs DO approach for this application is that a high-level of detail can be readily incorporated into the model in regions of high flux gradients and should lead to more accurate calculations at those locations.

A detailed MCNP model of HFIR [3,4] has existed for some time, but because of the high computational demand, its application to calculation of parameters in the nozzle areas has been limited [5]. This issue is alleviated by the CADIS approach in which convergence acceleration is greatly improved over analog calculations or those using basic variance reduction methods.

In the CADIS methodology a DO model, which uses the response multipliers (e.g. dpa cross sections) as the adjoint source at the location of interest, is automatically generated from a user-supplied mesh. Adjoint fluxes, $\phi^+(\vec{r},E)$, are calculated and are used with the actual source, $q(\vec{r},E)$, to determine the weight windows (w) and biased source ($\hat{q}$) values as follows:

$$w(\vec{r},E) = \frac{R}{\phi^+(\vec{r},E)} \qquad (1)$$

$$\hat{q}(\vec{r},E) = \frac{1}{R} q(\vec{r},E)\phi^+(\vec{r},E) \qquad (2)$$

where,

$$R = \int q(\vec{r},E)\phi^+(\vec{r},E)dEdV \qquad (3).$$

DESCRIPTION OF THE ACTUAL WORK

Description of HFIR Model

The HFIR MCNP model was originally developed for calculation of nuclear parameters for the beam tubes, including the HB-4 cold source and the beam tube guide hall, and has been reviewed and updated [6] in recent years. Additional updates as part of this work include enlarged designs of HB-2 and HB-4 and inclusion of beam tube nozzles, surveillance capsule holders (Keys), and an ion chamber. The latest model is shown in Fig. 1.

The HFIR core contains inner and outer annular fuel regions, modeled by 8 and 9 annuli, respectively, with each annulus is divided into 7 vertical zones, for a total of 119 fuel regions. Sources, materials, and control plate configurations are available for Beginning-of-Cycle (BOC) and End-of-Cycle (EOC) conditions.

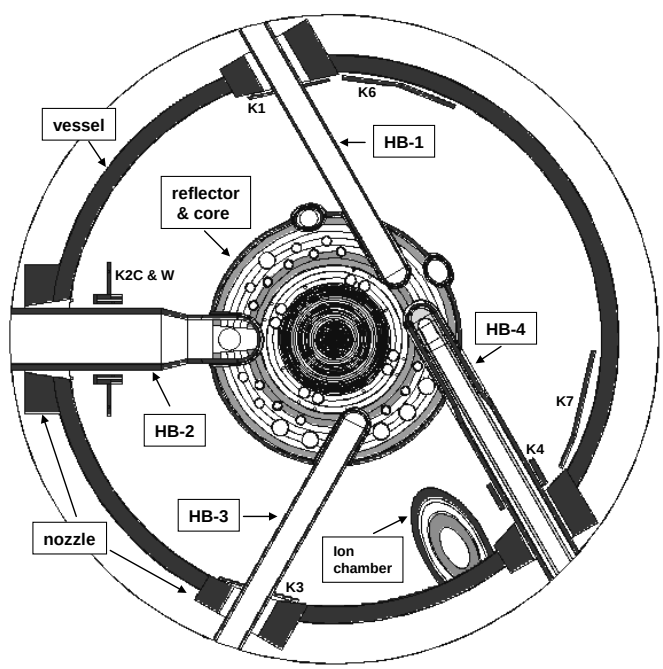

Fig. 1. Cross-sectional horizontal view of HFIR MCNP model at core vertical center.

Implementation of Calculations

CADIS calculations are performed as follows: 1) An adjoint-source DO model is automatically generated from the user-supplied mesh . 2) The model is run to produce adjoint fluxes which are used to determine weight windows and source-biasing parameters (Equations 1-3). 3) The MCNP model is then run using these variance-reduction parameters.

For these calculations the DO calculations were performed with the TORT code. (However, the newer ORNL Denovo code is also available as an option in ADVANTG.)

MCNP tallies included point-detector and cell tallies.

RESULTS

Calculations of dpa rates were performed for HB-2 (Keys 2W &2C, and the nozzle corner), HB-4 (Key 4), and for Key 5 which is located between HB-4 and HB-3. Key 5 presents a challenge because it is shielded by an ion chamber and is below the core vertical center. Additional evaluations for all Keys and other vital locations in the beam-tube nozzle regions are planned Also, the incorporation of additional detail and improvements to the model are in progress. Current results are consistent and show reasonable agreement with earlier 3D discrete ordinates results.

Sample point-detector MCNP results for locations around HB-2 and adjacent to nozzle surface (corner) are shown in Table I and are seen to be consistent. Uncertainties are ~1%. Discrete ordinates (TORT) runs are also shown for the 12:00 and 3:00 positions and are in reasonable agreement with MCNP values.

Table I. HB-2 Nozzle Corner Neutron dpa-Rates

Detector "clock" location	dpa Rate ($10^{-12}\cdot s^{-1}$) MCNP	TORT
1 (12:00)	57.8	61.0
2 (1:30)	57.9	
3 (3:00)	61.0	63.6
4 (4:30)	57.9	
5 (6:00)	56.4	
6 (7:30)	59.3	
7 (9:00)	61.7	
8 (10:30)	58.9	

Additional MCNP results are shown in Table II. Neutron dpa-Rate values are calculated for Key 5 using 1) CADIS/ADVANTG and 2) geometry-splitting/Russian-roulette variance reduction. Results show much faster convergence using the CADIS/ADVANTG method as indicated by a ratio of figure-of-merit (FOM) values of ~10,000.

This work is important because it extends the application of a detailed HFIR Monte Carlo model to the solution of previously-intractable problems and will result in improved analyses of dpa-rate values in the nozzle regions.

Table II. Comparison of Neutron dpa Rates at Key 5 for CADIS/ADVANTG vs Geometry-Splitting/Russian-Roulette

Method	Geom.-Splitting./ Russ.-Roulette	CADIS/ ADVANTG
Histories	10^7	10^8
Time [t] (m)	4415	1603
dpa Rate ($10^{-13}s^{-1}$)	0.6	0.8
Uncertainty [σ] (%)	23	0.003
FOM [$t^{-1}\cdot\sigma^{-2}$] (m^{-1})	0.004	69
FOM ratio	> 10,000	

REFERENCES

1. J. C. WAGNER and A. HAGHIGHAT, "Automated Variance Reduction of Monte Carlo Shielding Calculations Using the Discrete Ordinates Adjoint Function," *Nuclear Science & Engineering* **128**, 186 (1998).
2. S. W. MOSHER, T. M. MILLER, T. M. EVANS, and J. C. WAGNER, "Automated Weight-Window Generation for Threat Detection Applications Using ADVANTG", Proceedings of the 2009 International Conference on Advances in Mathematics, Computational Methods, and Reactor Physics, Saratoga Springs, New York, May 3-7, 2009.
3. J. A. BUCHOLZ, "Source Terms for HFIR Beam Tube Shielding Analyses, and a Complete Shielding Analysis of the HB-3 Tube," ORNL/TM-13720 (2000).
4. J. C. GEHIN, "Model Development and Benchmarking," presentation at the HFIR Cold Source review, March 11, 1996.
5. E. D. BLAKEMAN, J. A. BUCHOLZ, and R. D. CHEVERTON, "Calculation of dpa Tates at the HFIR HB-2 Beam Tube Nozzle Corner using Three-Dimensional Discrete Ordinates and Monte Carlo Models," ORNL/TM-2003/213 (2004).
5. D. E. PEPLOW, "A Computational Model of the High Flux Isotope Reactor for the Calculation of Cold Source, Beam Tube, and Guide Hall Nuclear Parameters," ORNL/TM-2004/237 (2004).

Edit Record

(Logged in as Williams, Velma A)

OK | Cancel

View Item | Change Communication Type | Delete Item

* Indicates the field is required before marking as Published / Presented.

Pub ID *	22120
Title *	HFIR dpa-Rate Calculations Using Hybrid Monte Carlo/Discrete Ordinates
Current Status	Submitted for review
Communication Type *	Abstract - conference
ORNL Review?	Scientific communication that requires ORNL review
Contact Person *	17957 Blakeman, Edward D
Responsible Organization *	Nuclear Science & Technology Division (50159781)
Prepared at *	(•) This scientific communication is being prepared by someone at ORNL. ( ) This scientific communication is being prepared by someone outside of ORNL.
Document Access *	Upon final approval, the attached document and the metadata in this record may be made available (•) To the public ORNL site ( ) Only to users with a valid UCAMS userid and password ( ) Only to users in organization 0 ( ) Only to the document's authors, reviewers, and approvers **Important:** If you choose the 'To the public' option, your document will be posted on an ORNL public server once division approval is obtained. Note, however, that most publishers do not allow reproductions/photocopies of their published material (which is copyrighted) to be posted on a public server. Therefore, unless you have the publisher's expressed permission to post such a document, do not do so. For further clarification, please contact ORNL's Technical Information Officer.
Authors *	Add / Remove / Move Up / Move Down Authors of this publication: Blakeman, Edward D (ORNL) Coauthors from other publications (Click a row to add to author list): Blakeman, Edward D (ORNL); Cheverton, Richard Dean (ORNL); Clayton, Dwight A (ORNL); Cunningham, Mark F (ORNL); Fabris, Lorenzo (ORNL); Murphy, Brian D (ORNL)
Reviewers and Approvers *	Step 1: Supervisor * — Johnson, Jeffrey O — Approve — 11/9/2009 Step 2: Technical Reviewer * — Peplow, Douglas E. — Recommend — 11/9/2009 Technical Reviewer 947699 — Mosher, Scott W Step 3: Supervisor * 27533 — Johnson, Jeffrey O Step 4: Program Manager Step 5: TI Manager * 37727 — Wagner, John C Step 6: Division Approver * Parks, Cecil V How do I enter an external reviewer?
Requested Approval Date	11/11/2009 (mm/dd/yyyy)
Document *	HFIR_ANS_11-09-09.doc The file is optional if an abstract is entered below. **Important:** Documents containing sensitive information should not be loaded into PTS. For further clarification, please contact ORNL's Technical Information Officer.
Abstract	
Invited?	( ) Yes (•) No
Refereed?	( ) Yes (•) No
Additional Information	
Publication Month *	Select month
Publication Year *	
Conference Name *	2010 ANS Joint Topical Meeting of the Radiation Proctection and Shielding Division, Isotopes and Radiation Division, and Biology and Medicine Divisions

Conference City *	Las Vegas
Conference State *	Nevada
Conference Country *	USA
Conference Sponsor	
Conference Begin Date *	4/19/2010 (mm/dd/yyyy)
Conference End Date	4/23/2010 (mm/dd/yyyy)
User Facility *	☑ Not related to a user facility ☐ Bioprocessing Research Facility ☐ Buildings Technology Center ☐ Californium User Facility for Neutron Science ☐ Center for Computational Sciences ☐ Center for Nanophase Materials Sciences ☐ Center for Structural Molecular Biology ☐ Computational Center for Industrial Innovation ☐ Cooling, Heating and Power Integration Laboratory ☐ Fuels, Engines and Emissions Research Center ☐ High Flux Isotope Reactor ☐ High Temperature Materials Laboratory ☐ Holifield Radioactive Ion Beam Facility ☐ Other RIB Facility ☐ ITER Program ☐ Metals-Processing Laboratory Users Facility ☐ Mouse Genetics Research Facility ☐ Multicharged Ion Research Facility ☐ National Transportation Research Center ☐ Oak Ridge Electron Linear Accelerator ☐ Oak Ridge National Environmental Research Park ☐ Physical Properties Research Facility ☐ Power Electronics and Electric Machinery Research Facility ☐ Safeguards Laboratory ☐ Shared Research Equipment Collaborative Research Center ☐ Spallation Neutron Source
Account Number(s) *	32102292 **Note:** Enter the account numbers responsible for funding the work discussed in the document. Multiple account numbers should be separated by commas. If an account number corresponds to a cost center, please enter "orgburdn" in its place. Account numbers will be used for tracking purposes only. No accounts will be charged.
Proposal Numbers	
Keywords	

OK Cancel