Safeguards Options for Natural Uranium Conversion Facilities— A Collaborative Effort between the U.S. Department of Energy and the National Nuclear Energy Commission of Brazil

Ana C. Raffo Caiado, John M. Begovich, and Juan J. Ferrada
Oak Ridge National Laboratory

Lilia C. Palhares, Fabio C. Dias, and Marcos S. Grund
National Nuclear Energy Commission of Brazil

ABSTRACT

In 2005, the National Nuclear Energy Commission of Brazil (CNEN) and the U.S. Department of Energy (DOE) agreed on a collaborative effort to evaluate measures that can strengthen the effectiveness of international safeguards at a natural uranium conversion plant (NUCP). The work was performed by DOE's Oak Ridge National Laboratory and CNEN. A generic model of an NUCP was developed and typical processing steps were defined. The study, completed in early 2007, identified potential safeguards measures and evaluated their effectiveness and impacts on operations. In addition, advanced instrumentation and techniques for verification purposes were identified and investigated. The scope of the work was framed by the International Atomic Energy Agency's (IAEA's) 2003 revised policy concerning the starting point of safeguards at uranium conversion facilities. Before this policy, only the final products of the uranium conversion plant were considered to be of composition and purity suitable for use in the nuclear fuel cycle and, therefore, subject to AEA safeguards control. DOE and CNEN have explored options for implementing the IAEA policy, although Brazil understands that the new policy established by the IAEA is beyond the framework of the Quadripartite Agreement of which it is one of the parties, together with Argentina, the Brazilian-Argentine Agency for Accounting and Control of Nuclear Materials, and the IAEA. This paper highlights the findings of this joint collaborative effort and identifies technical measures to strengthen international safeguards in NUCPs.[1]

INTRODUCTION

The Brazilian Nuclear Energy Commission (CNEN) and the U.S. Department of Energy (DOE) have agreed on a collaborative effort to evaluate measures to strengthen the effectiveness of international safeguards at a natural uranium conversion plant (NUCP). The work is being performed by DOE's Oak Ridge National Laboratory (ORNL) and CNEN. The project will develop a generic model of a NUCP, including defining typical processing steps; identifying potential safeguards activities and evaluating their effectiveness, costs, and impacts to operations; and identifying advanced instrumentation and techniques for verification purposes.

In 2003, the International Atomic Energy Agency (IAEA) issued Policy Paper 18, "Safeguards Measures Applicable in Conversion Plants Processing Natural Uranium," concerning the starting point of safeguards at uranium conversion facilities. Before the issue of this policy, only the final products of the uranium conversion plant were considered to be of composition and purity suitable for fuel fabrication or for being isotopically enriched and, therefore, subject to all the safeguards procedures described in the safeguards agreements. The IAEA now considers that the uranyl nitrate (UN) solution meets the above requirement, and if there are no procedures to account for this material in a particular facility, the full safeguards procedures should be extended upstream in the process, going eventually to the measurement

[1] Acknowledgements: The authors of this paper would like to acknowledge the invaluable support of Cyndee Annese and Bill O'Connor of DOE's National Nuclear Security Administration for the work done on a preceding study involving approaches for enhancing the safeguards of generic natural uranium conversion plants.

of the uranium content of the yellowcake input to the process. IAEA Policy Paper 18, combined with the new strengthened safeguards measures allowed by the Additional Protocol,[2] has changed safeguards approaches for NUCPs.

The main points addressed in Policy Paper 18 are

- interpretation of the nuclear material subject to safeguards (the starting point), with yellowcake included in the new definition of source material;
- new requirements for design information provision and verification (DIV);
- new DIV objectives; and
- use of a broad complementary access concept.

Although the new policy established by the IAEA is beyond the framework established in the Quadripartite Safeguards Agreement, DOE and CNEN have explored options for implementing the IAEA policy.

The goal of this paper is to establish the technical basis for safeguarding NUCPs in accordance with recent IAEA policy changes. The most appropriate process configuration was extracted to constitute a process model. Based on the operational characteristics of this modeled process, strategic measurement points that would detect clandestine diversion of uranium were selected and a few candidate instrumentation systems were proposed.

TECHNICAL PROCESS FOR NATURAL URANIUM CONVERSION PLANTS

An NUCP is a vital part of the nuclear fuel cycle. This type of facility produces uranium compounds such as UO_2, UF_4, UF_6, and uranium metal. The products of the NUCP typically are used as feedstock for uranium enrichment facilities or for reactor fuel fabrication, but they can also be used in supporting a nuclear weapons program. The main purpose of an NUCP is to convert yellowcake to a material in a chemical and physical form that is suitable for use in a nuclear program. An NUCP may also be capable of converting UF_6 to other desired uranium compounds (e.g., UF_4 or UO_2).

The term yellowcake usually refers to one of several impure uranium compounds extracted from uranium-containing ores. Regardless of its chemical form, the uranium content of yellowcake is usually expressed in terms of the equivalent amount of U_3O_8 contained in the yellowcake. Yellowcake is typically the starting input material for an NUCP. Different processing approaches are used throughout the world where NUCPs are concerned.

One of the primary processing approaches involves a “wet” process in which yellowcake is dissolved and purified via solvent extraction and then converted in a series of denitration, reduction, hydrofluorination, and fluorination steps to UF_6 or uranium metal. A second approach, called the “dry” process, is used where the yellowcake feed is fairly pure; thus, the dissolution and solvent extraction steps are omitted and a fractional distillation step for final purification of the UF_6 is included at the final stages of processing. A variation to the dry approach is used to convert fairly pure uranium oxides (e.g., UO_3 or U_3O_8) directly to UF_6 via a fluorination process.

An NUCP using a wet process typically includes the following operations:

1. conversion of natural uranium oxides (e.g., U_3O_8 or yellowcake) to UN solutions;

[2] Model Protocol Additional to the Agreements between States and the International Atomic Energy Agency for the Application of Safeguards, INFCIRC/540 (Corrected), IAEA, 1997.

2. purification of UN solutions;
3. precipitation of purified UN solutions in a solid form [e.g., ammonium diuranate (ADU), ammonium uranyl carbonate (AUC), or UO_4];
4. calcination of precipitates (e.g., ADU, AUC, or UO_4) to UO_3;
5. reduction of UO_3 to UO_2;
6. hydrofluorination of UO_2 to UF_4; and
7. fluorination of UF_4 to UF_6 or reduction of UF_4 to uranium metal.

POTENTIAL DIVERSION ROUTES

Introduction of Undeclared Material or Diversion of Declared Uranium Solution

One clandestine objective may be to use equipment in the NUCP to process undeclared material for a weapons program with diversion upstream from key measurement points to avoid detection. Extra uranium mass could be introduced at almost any point in the process, depending on the form and purity of the undeclared material. The most likely scenario appears to be introduction of undeclared yellowcake, either in drums not in the declared accountability data or as hidden uranium mass (e.g., higher uranium assay than reported or lower drum tare weight than normal) in the drums that are part of the declared accountability data.

Figure 1 illustrates the strategic measurement points suggested to control the material balance of uranium in the NUCP. The first point is the declared yellowcake received at the plant for processing. In-process monitors anywhere downstream after the yellowcake is dumped into the feed hopper and processed may verify the records of the mass of declared uranium feed received over time. Several opportunities exist to monitor downstream receipt of the yellowcake. The UF_6 produced by the NUCP should be monitored. A record of the uranium mass exiting the plant in the product (point 8 in Fig. 1), with a record of the uranium mass entering the plant in the feed (yellowcake, point 1 in Fig. 1), provides the means of an overall plant uranium mass balance (minus the uranium leaving as waste and hold up). Thus, at a minimum, the uranium feed entering the plant and the uranium product exiting the plant should be monitored. All plants operate with some loss of raw material in the waste streams. In other words, 100% of the uranium mass in the feed is not expected in the product. If the uranium mass lost in the waste stream is not monitored, then some idea of processing efficiency must be known in order to detect either (1) introduction of undeclared uranium mass into the process or (2) diversion of uranium mass from the process for a clandestine weapons program. A uranium mass produced that is greater (clandestine feed) or less (diversion) than the mass expected (within normal experimental error) from a given feed mass raises suspicions about a possible clandestine weapons program. Inaccurate measurements can result in such discrepancies, so such results alone are not necessarily definitive proof. However, they do indicate that closer scrutiny may be required in an attempt to discover and eliminate the source of the discrepancy, whether it arises from inaccurate measurements, process upsets, or a clandestine weapons program. The yellowcake fed from the feed hopper into the dissolver (point 2 in Fig. 1) is the first opportunity in the process to verify the uranium mass recorded in the accountability data for the yellowcake received at the NUCP.

One possible monitoring location just after dissolution is downstream of the UN tank (point 3 in Fig. 1). Two other good locations for monitoring the uranium solution are the exit streams from the strip column following solvent extraction (purification) and downstream of the evaporator before the denitrification and solidification steps. Both the aqueous strip solution loaded with uranium (point 4 in Fig. 1) and the organic stripped of uranium exiting the strip column (point 5 in Fig. 1) should be monitored. Monitoring the aqueous strip solution provides a verification point for the uranium mass balance on the main uranium process stream after dissolution and purification. Monitoring the organic stream verifies the efficiency of the solvent extraction process and provides mass balance closure on this process to help prevent diversion of uranium hidden by some means in the existing organic stream. The concentrated solution from the

evaporator appears to be a good point for the last monitoring location prior to precipitation. Monitoring can be done at one of two locations (1) just out of the evaporator before the pump (point 6a in Fig. 1) or (2) downstream of the reflux lines and valves but before the cooler (point 6b in Fig. 1). In summary, the flowing liquid streams are easily diverted, but they also are more amenable to in-line, real-time monitoring.

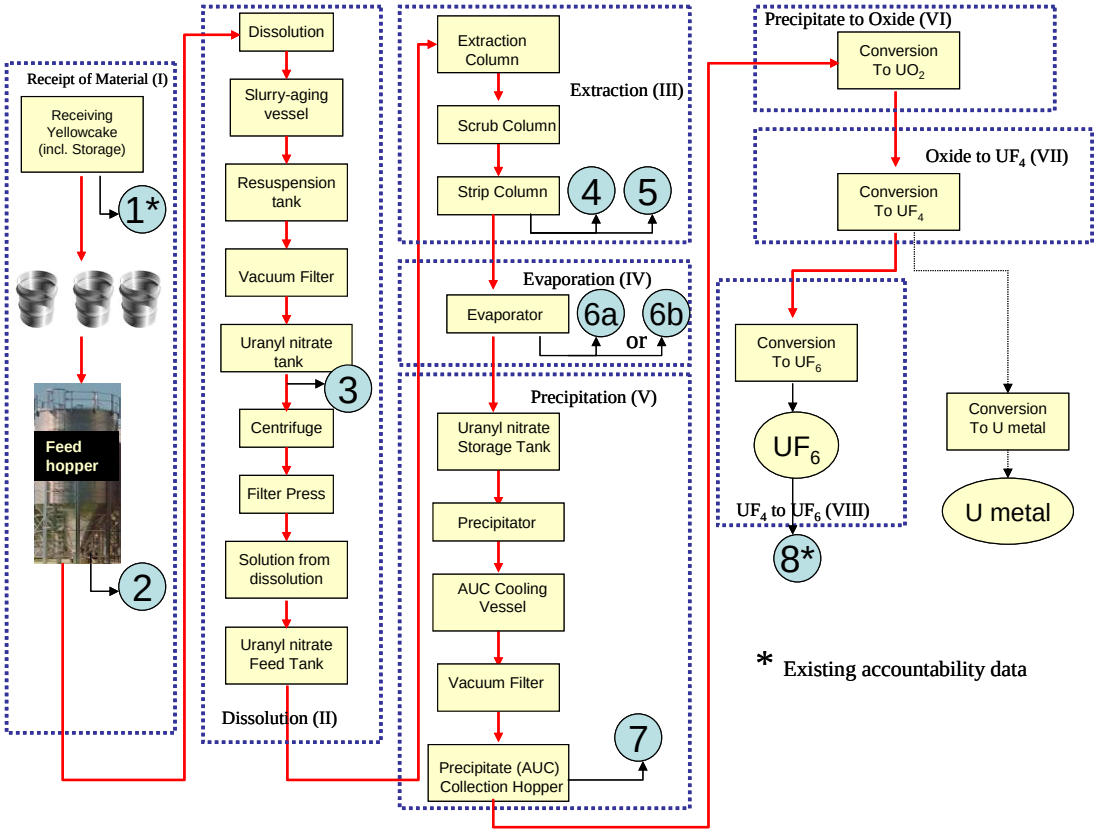

Fig. 1. Recommended key measurement points.

RECOMMENDED KEY MEASUREMENT POINTS

The key measurement points are summarized in Table 1. These key measurement points help prevent the introduction of clandestine feeds and help prevent diversion prior to precipitation.

Table 1. Suggested Key Measurement Points

Key Measurement Point Number	Location	Justification
1	Quantity of yellowcake received at the NUCP for processing	This is a record of the uranium entering the plant. The uranium entering and exiting the NUCP, as feed and product, respectively, are the minimum required key measurement points.
2	Yellowcake fed from the feed hopper to the dissolver	This gives an independent verification of the quantity of yellowcake entering the process and helps prevent introducing "unaccounted" material that can be diverted before the first key measurement point downstream of the dissolver. This gives the input value for mass balance analysis.
3	Uranyl nitrate solution exiting the uranyl nitrate tank downstream of the dissolver	This gives the first analysis of the uranium dissolved from the yellowcake and helps prevent diversion of dissolved uranium or use of the equipment to process unaccounted uranium. The uranium in solution should match the uranium coming in with the yellowcake, minus what exited with the undissolved solids.
4	Purified aqueous uranyl nitrate solution exiting the strip column after solvent extraction purification.	This provides a mass balance check after purification of the uranium, an attractive point of diversion.
5	"Stripped" organic stream exiting the strip column for solvent extraction purification.	This helps prevent inefficient stripping and possible diversion of uranium away from the main uranium path through solvent recycle/disposal.
6a or b	Aqueous uranyl nitrate solution exiting the evaporator. Monitors either (a) in the line exiting evaporator before passing through any valves or equipment or (b) just before the cooler leading to the storage tank	The evaporator provides another opportunity for diversion after purification. Measuring here helps prevent that. Each intervening valve and piece of equipment provides another opportunity for diversion. Hence, arguments can be made to monitor right out of the evaporator or just downstream of the reflux leg back into the evaporator and ahead of the cooler leading into the storage tank.
7	Dry uranium solid (ammonium uranyl carbonate) after precipitation	This is right after the uranium has been solidified and collected. Measuring here verifies the uranium dissolved and purified and helps prevent diversion during precipitation/denitration. Some NUCPs collect the product in drums at this point for transport to the next step in the process. If so, this could be a traditional accountability system using a surveillance system for drum counting and nondestructive analysis to estimate uranium/drum.
8	UF_6 collected in cylinders for shipping	This gives the product output value for mass balance analysis. The uranium in this product combined with the uranium in the waste streams should match the input uranium value. The uranium entering and exiting the NUCP, as feed and product, respectively, are the minimum required key measurement points.

The largest uranium losses in the NUCP are estimated to be

1. uranium remaining with the filtered solids after dissolution (probably insoluble uranium trapped in a silicate matrix) and
2. uranium in vent gases (uranium in the dust/mist from the dissolver or handling the solid uranium powders, AUC, UO_3, UO_2).

These waste streams are logical strategic points to consider both for risk mitigation and inspector analysis to check or verify mass balances. Losses can be minimized by recapturing and recycling, but 100% of the uranium cannot be recovered whether it is the ore being extracted or aerosols being captured. In general, the effort to capture and recycle material depends on its value. Natural uranium is not considered valuable compared to enriched uranium, but an overall efficiency exceeding 95 wt % is considered reasonable for the NUCP (i.e., >475 kg of uranium is expected to exit the plant as UF_6 for 500 kg of uranium entering the plant in the yellowcake).

Diversion can occur in nearly infinite number of ways within a finite NUCP. The key measurement points will not only be finite but probably also minimal. The logical strategic points reviewed above give a reasonable number of finite points to consider for a measurement program. To generate an overall mass balance for an NUCP, the uranium entering and leaving the plant as the yellowcake feed and UF_6 product must be measured. In addition to these two points, at least one internal key measurement point is recommended, resulting in a total of at least three key measurement points. If only one internal key measurement point is used, the recommended point is just after purification (where the aqueous material exits the strip column). Diversion is not attractive until after purification, and the point at which this happens is the logical place to measure for comparison with the feed and product uranium mass rates.

Table 2 summarizes safeguards approaches that can be used at the suggested key measurement points, including the following required implementation steps (referred to in the table).

a. Proof of principle
b. Selection of specific systems
c. Procurement of hardware
d. Lab-scale testing
e. Final procedure development
f. Full-scale demonstration
g. Final deployment

Table 2. Safeguards for the Suggested Key Measurement Points from Table 1

Key Measurement Point Number	Process Parameters	Safeguards System	Steps Required to Implement Safeguards System
1	Solid yellowcake received in drums, stored, and dumped into feed hopper for dissolver	Accounting with grab samples taken for DA	g
		Nondestructive analysis of uranium in drum	a
2	Solid yellowcake fed from bottom of feed hopper to the dissolver	Mass rate of solid feed using process gravimetric techniques combined with analysis of uranium content from measurement point 1 or destructive analysis of grab samples from measurement point 2	b–g
3	Unpurified uranyl nitrate solution	In-line measurement of uranium concentration, pH, density, conductivity, temperature, and flow rate	b–g
4	Purified uranyl nitrate solution	In-line measurement of uranium concentration, pH, density, conductivity, temperature, and flow rate	b–g
5	Stripped organic liquid	In-line measurement of uranium concentration, density, temperature, and flow rate	b–g
6	Concentrated purified uranyl nitrate solution	In-line measurement of uranium concentration, pH, density, conductivity, temperature, and flow rate	b–g
7	Purified solid dry uranium (ammonium uranyl carbonate or UO_3)	Accounting with grab samples taken for destructive analysis	g
8	UF_6 collected and stored in cylinders	Accounting with grab samples taken for destructive analysis	g

RESULTS OF JOINT EXPERIMENTS WITH FLOW METERS AND GAMMA RAY DETECTORS

Flow Meters and UN Test Loop

Continuous monitoring of uranium solution process streams is frequently considered as a potential technique to support safeguards implementation in an NUCP, and Brazil is interested in observing and evaluating the performance of these instruments. Two tested instruments [Endress+Hauser Promass 83F Coriolis meter (Fig. 2) and Yokogawa ADMAG SE magnetic flow meter (Fig. 3)] require interruption of the line for physical contact with the solution being monitored. Another tested flow meter based on ultrasonic emission can perform the task by wrapping the instrument to a pipe, making installation and maintenance easier. However, due to operating principles, the Coriolis and the magnetic models usually perform better than the ultrasonic meter.

Fig. 2. Coriolis flow measuring system.

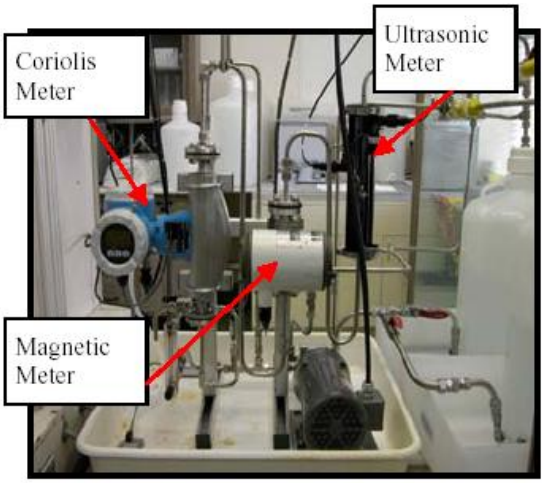

Fig. 3. Uranyl nitrate flow loop installed at Oak Ridge National Laboratory.

The ORNL UN test loop has the capability to test the flow meters' responses to various flow rates (0–16 LPM), entrained air, and pulsating flow conditions. It can also be used to perform tests with entrained organic (e.g., 1–5 vol % kerosene) in the UN solution.

LabVIEW is used for the data acquisition system. The computer can be remotely monitored. Two web cameras were mounted inside the hood to monitor for proper operation of the system. The cameras can also be viewed remotely. Additional cameras could be mounted outside the hood or the current cameras could be moved to a different location.

The system includes two tanks for feed material, which can be changed with a valve. This currently allows for the organic solution to remain separate from the pure UN solution. The organic tank is currently empty and could be used to simulate a diversion of material. All the valves in the system are manually operated.

The selection of the most adequate instrumentation is usually based on several boundary conditions, including facility operational restrictions and intrusiveness limitations. As usual in safeguards applications, before final qualification any instrumentation has to be exhaustively tested to ensure appropriate reliability and performance levels under different measurement conditions. Typically this involves developing a test loop capable of simulating various measurement conditions and providing sufficient performance information to be used as input data for guiding later tests in real plants. In

addition, other safeguards related technical aspects have to be taken into account: data authentication, tampering indication, calibration requirements, user interface, data evaluation, and installation concerns.

The monitoring of nuclear materials in the plant usually requires the use of radiation detection techniques. Since commercial flow meters do not perform radiation measurement, the use of such instrumentation as a safeguards tool has to be associated with additional detection systems.

Preliminary tests using neutron detectors indicate that this measurement technique may be used to quantify relative uranium isotope densities in the stream. However, the most adequate methodology for such detection systems is still under evaluation.

Gamma-Ray Detectors

Gamma-ray spectroscopy is a widely used measurement technique. Measurements often need to be performed in the field, during inspections at nuclear facilities, as a way to promptly draw safeguards conclusions. In this context, the use of portable instrumentation such as radiation detectors and pulse analysis modules plays an important role.

There are several commercially available gamma-ray detection systems. To select the most adequate detection system for a certain application, two performance parameters are usually important: energy resolution and detection efficiency. High-purity germanium (HPGe) detectors represent the current state-of-the-art in terms of energy resolution. Therefore, such detectors are commonly used for quantitative measurements that require improved performance. HPGe detectors have to operate under extremely low temperatures and use liquid nitrogen to cool down the crystal. For field applications, this requirement may represent a problem if liquid nitrogen cannot be easily obtained. Recent technological developments in radiation detection have provided the nuclear community interesting options for field applications. New techniques to cool down HPGe crystals have been developed based on electrical or mechanical systems. This is the case for two recently developed portable systems: the Detective, manufactured by AMETEK/ORTEC, and the Falcon, manufactured by CANBERRA.

Preliminary evaluations of both systems have shown they may constitute attractive measurement tools for nuclear material accountancy. In addition to the attractive feature of not requiring liquid nitrogen, the new cooling technologies may significantly decrease the time delay required to start a cooling cycle after the detector has warmed up to room temperature. While conventional liquid nitrogen cooled HPGe detectors require many hours, the new systems may require fewer hours.

Taking into account safeguards applications, some disadvantages have been identified. First, since no specific analysis tool for safeguards is integrated with any of the currently available equipment, it is necessary to extract the collected spectra and analyze them with additional software installed on a computer. Second, the high cost may reduce the number of potential users that could be interested in improving their measurement procedures and conducting performance tests, contributing to a consistent assessment of these new technologies.

Still in the field of gamma-ray spectroscopy, another important development has to be mentioned: scintillation detectors based on lanthanum bromide ($LaBr_3$) crystals.[3] The most attractive features of this detector type include the improved energy resolution and total efficiency compared with traditional NaI(Tl) crystals. Operation at room temperature with good stability is also an important advantage. Preliminary tests indicate significant improvement for quantitative determination of uranium. However, a more consistent performance evaluation, under different measurement conditions, has to be performed. In

[3] C.A. Gariazzo, S.F. Saavedra, S.E. Smith, and A.A. Solodov, "Assessing Lanthanum-Bromide Detectors for Safeguards Applications," 48th INMM Meeting, 2007, Tucson, Arizona.

addition, modern gamma-ray analysis codes based on peak fitting algorithms are not prepared for evaluating typical $LaBr_3$ spectra. Considering these codes are widely and frequently used by the safeguards community as an important gamma-ray analysis tool, a more realistic assessment of $LaBr_3$ performance will be possible only after modified code versions have been developed.

CONCLUSIONS

Flow Meters

Additional tests are necessary for the following reasons.

1. Actual applicability, long-term reliability, resistance to tampering, data authentication requirements, calibration procedures, interferences, and limitations must be evaluated by testing the instrumentation under controlled conditions during prolonged periods.

2. The **user interface** and **data evaluation** must be established. Because the purpose of the system is nuclear material accountancy, the main data to be evaluated are the uranium values for the various flows/process streams. The evaluation should be performed between two safeguards inspections in a monthly basis. The Coriolis and magnetic flow meters display the instantaneous flow rate (if a stand-alone display is included with the instrument). Therefore, the flow rate should be integrated to have the system display the total uranium flow. This integration can be taken care of during data acquisition. The proper media to store data and backup systems should also be investigated

Gamma-Ray Detectors

Regarding the recently developed portable HPGe systems, some investigations are necessary to evaluate the performance of these systems in the field. To do so, some specific analysis tools for safeguards applications need to be evaluated and appropriately integrated into the systems.