GNEP Coupled End-To-End (CETE) Project:
Head-End Processing and Tritium Removal Using Voloxidation

B. B. Spencer, G. D. DelCul,
T. W. Burgess, E. C. Bradley,
C. A. Baldwin and E. D. Collins,
Oak Ridge National Laboratory
1 Bethel Valley Road
Oak Ridge, Tennessee 37831-6223

32nd Annual Actinide Separations Conference
May 12 – 15, 2008
Park City Marriott, Park City, Utah

CETE Research & Development Program

- **Program goals are to address remaining development needs of the GNEP program**
  - **Head-end preparation and processing**
  - **Key steps of TRU separations must be established**
  - **Proof of robust separations through repeated successful tests**
  - **Fabrication of TRU-bearing test targets**
- **Scale of process must be meaningful**
  - **Approximate scale of individual tests: 2—5 kg of SNF**
- **Voloxidation is part of the head-end preparation**
  - **Release of <u>vol</u>atile fission products during <u>oxidation</u>**
  - **Developed as a method to remove tritium (^3H) prior to introducing the fuel to the aqueous dissolution and separations processes, otherwise**
    - **Tritium accumulates in aqueous and organic media within the plant**
    - **Subsequent separation and disposal of tritium very difficult**

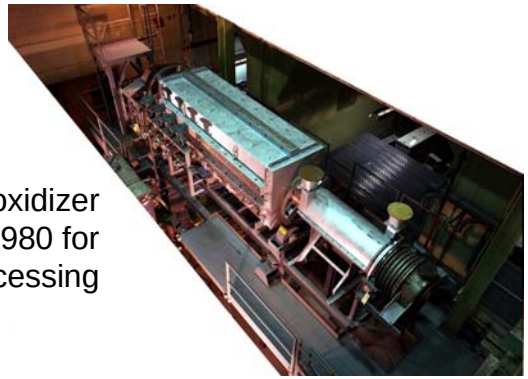

Rotary Calciner-type Voloxidizer
Developed ca.1980 for
LWR and LMFBR Fuel Processing

Voloxidation Process

- **The "standard" Voloxidation process targets tritium removal and capture**
  - **Chopped fuel pin segments are fed to the voloxidizer**
  - **Oxidation of the fuel releases 99.9+% the tritium from the fuel matrix**
    - **Oxidation and tritium evolution complete in ~4—6h at 450—500°C**
    - **Fuel is restructured from monolithic UO_2 to U_3O_8 powder**
    - **A portion of other volatiles is also released**
      - **~50% ^{14}C (as CO_2)**
      - **~6% Kr and Xe**
      - **~1% Iodine (Br may behave similarly)**
      - **< 0.2% ^{106}Ru, ^{125}Sb, $^{134–137}Cs$**
  - **In the plant environment, off-gas treatment with molecular sieves removes HTO**
    - **Remaining gases join dissolver off-gas for treatment**
  - **Other benefits of the process include**
    - **Potential mechanical separation of cladding hulls from fuel**
    - **Use of simplified continuous dissolver for powdered fuel product**
    - **More rapid dissolution, thus smaller dissolver**
  - **Questions remain concerning changes to undissolved solid residues (or undissolved solids, UDS)**

Voloxidation Process (continued)

- **An "enhanced" Voloxidation process appears feasible**
  - **Higher temperatures (up to 1100°C)**
    - **May volatilize all the Iodine and Cs (shown to occur at ~1100°C)**
    - **Greatly improve removal of ^{14}C, Kr and Xe**
    - **Release other volatile or semi-volatile species (Tc, Mo, Te)**
      - **Mitigates problems in the separations systems**
  - **Alternative oxidants (e.g. pure O_2, H_2O, O_3)**
    - **Could reduce temperatures at which volatiles are released**
    - **Completely release volatiles (finer UO_3 product with O_3)**
    - **Improve or completely release semi-volatiles**

CETE Voloxidation: Quick-start Process and Design of Primary Machine

- **Quick-start of the CETE separations campaigns required voloxidation of the Run-1 fuel while the primary Voloxidizer was being designed and built**
- **Run-1 Dresden fuel was voloxidized in very simple lab-scale apparatus within the hot cell**
  - **Provided fuel powder for dissolution and subsequent separations**
  - **Simple trapping agents were used to collect specific off-gases**
- **The primary Voloxidation process would be**
  - **Built around a custom-designed rotary calciner**
  - **Support throughput requirements of ~20 kg/yr in 4 campaigns/yr**
    - **e.g. up to 5kg/batch**
  - **Include option to combine Voloxidation & cladding separation in one machine**
  - **Include a gas-supply system to support various tests**
  - **Interface with an Off-Gas Treatment system to trap**
    - **HTO, ^{14}C (CO_2), I_2, ^{85}Kr, and Xe**

Run 1—Voloxidation of Dresden Fuel

- **Voloxidixed ~3.5 kg of Dresden Fuel at 600°C**
  - **1.268 kg, still in the clad, processed in quartz vessel in several 200 g sub-batches**
    - **No off-gas trapping**
  - **2.266 kg loose pellets/pellet fragments processed in stainless steel vessel in two sub-batches**
    - **Trapping of selective off-gases**
    - **Air fed to the voloxidizer was pre-treated with Drierite and Molecular Sieve 5A to reduce loading off-gas traps with water and CO_2 from atmospheric air**

Run 1—Voloxidation of Dresden Fuel (cont.)

- **Simple off-gas trapping system collected specific volatiles**
  - **Used in concert with SS voloxidation vessel**
  - **Molecular sieve, type 3A, for capture of HTO**
  - **NaOH for CO_2 and I_2**
  - **Sodalime as a backup trap for both**

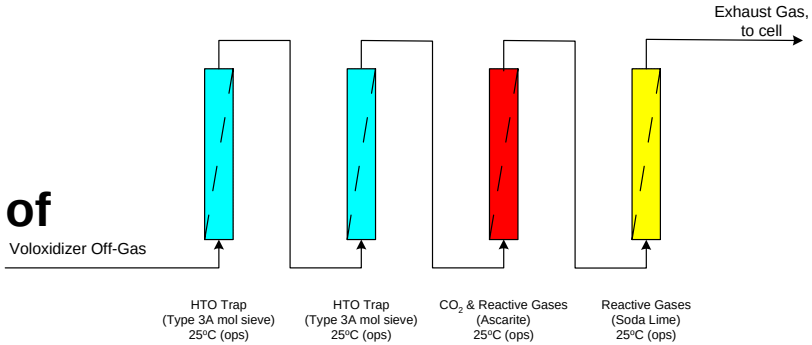

- **Results indicated**
  - **^{3}H and ^{129}I were captured on molecular sieve**
  - **2.1 mCi ^{3}H captured**
    - **Maximum amount in the test quantity of fuel estimated at 200 mCi**
    - **Fuel chopped many years ago, ^{3}H could have escaped before the test**
  - **Iodine co-trapped on molecular sieve likely because there was so little of it**
    - **0.042 µCi ^{129}I recovered**
  - **^{14}C below analysis limits**

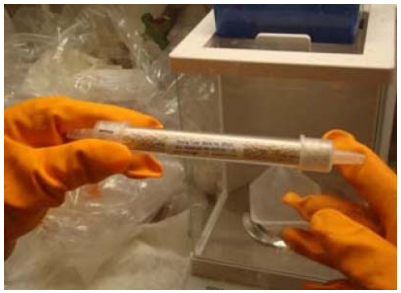

Primary Voloxidation Process Concept

In-cell Voloxidizer with Out-of-Cell Off-gas Treatment

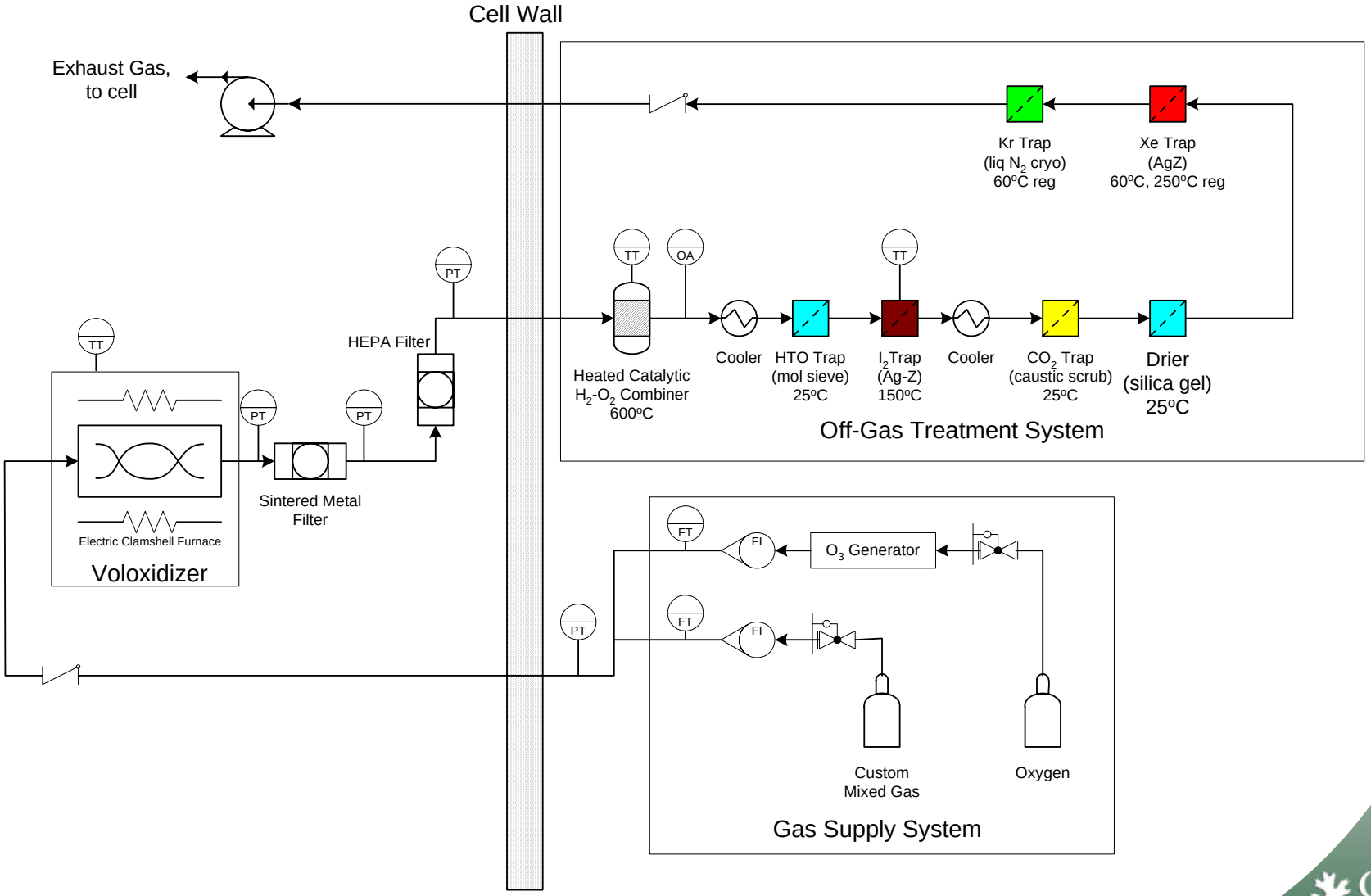

Voloxidizer Implementation: Custom Rotary Calciner

- **Concept developed for batch solids, gas flow through rotary calciner**
- **Features for hot-cell operation and maintenance included**
- **Use of perforated internal drum to enable separation of cladding hulls from product**
- **Tilting platform to select operating and loading/unloading positions**

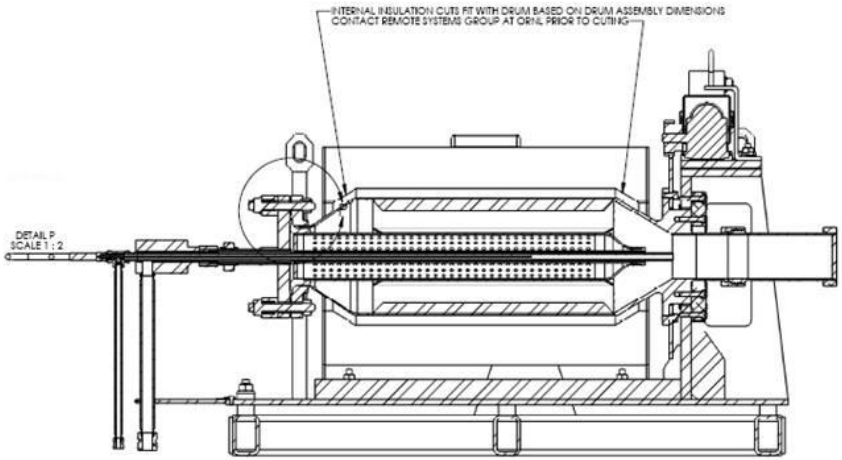

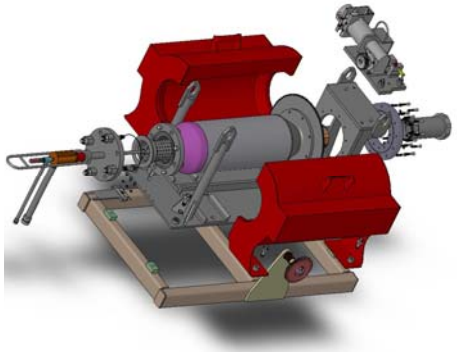

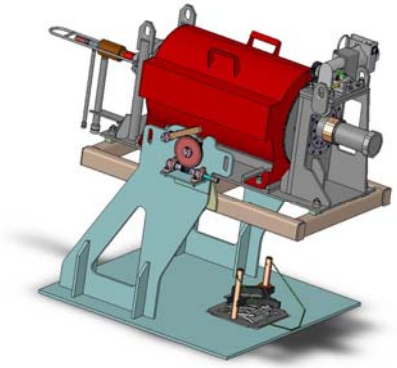

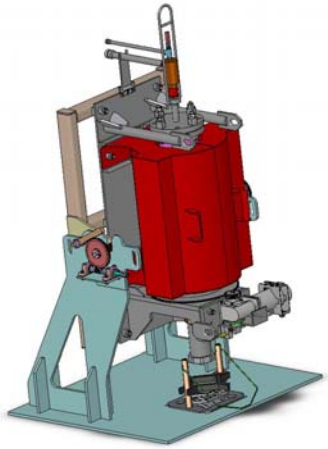

Completed Voloxidizer

Scale of Voloxidizer and Hulls Basket

Voloxidizer

Product Canister
and Support Fixture

Ancillary Hardware Completed:
Connection Sequence as Illustrated

Gas Supply Rack

Data Acquisition

Off-gas Treatment

Flow Lines

Data Lines

Out-of-cell

In-cell

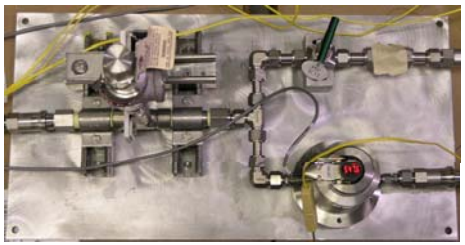

Feed Gas Manifold

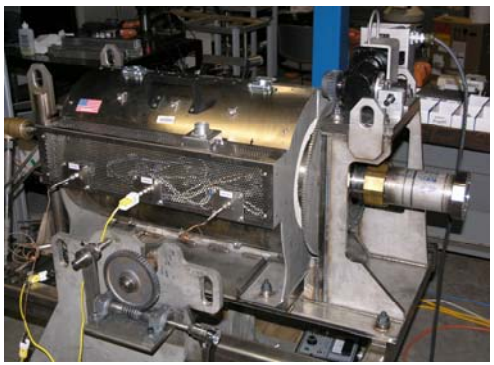

Voloxidizer

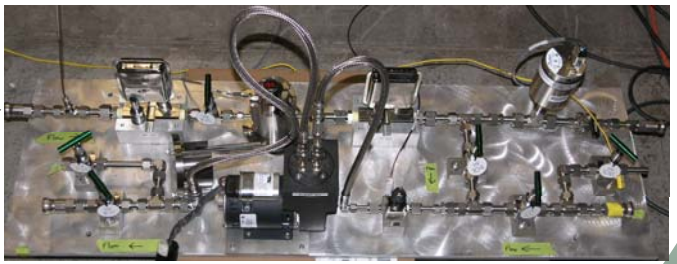

Off-gas Manifold

Cold Checkout of Integrated System Completed

- **An integrated cold-test of the voloxidizer, gas supply, and off-gas systems was completed**
  - **Operability of equipment was verified**
  - **Safety significant devices were tested**
- **The equipment performed well**
  - **Use of one pump to pull gas through the off-gas system and control pressure in the voloxidizer was demonstrated**
  - **Stable control of pressure and flow at gas supply rates of up to 10 slpm**
- **Activities in progress**
  - **Install equipment in hot-cell facility**
    - **Voloxidizer and in-Cell Gas Handling Equipment inside hot-cell**
    - **Gas Supply and Data Acquisition System Out-of-Cell**
    - **Off-Gas Treatment Out-of-Cell**
    - **Wire-in & Piping Through Cell Interface Ports**
  - **Complete system-to-facility interfaces**
  - **Implement Safety Analysis Report (SAR)**
  - **Complete Readiness Assessment (RA)**
- **Expect to voloxidize kg quantities of used North Anna fuel in August**

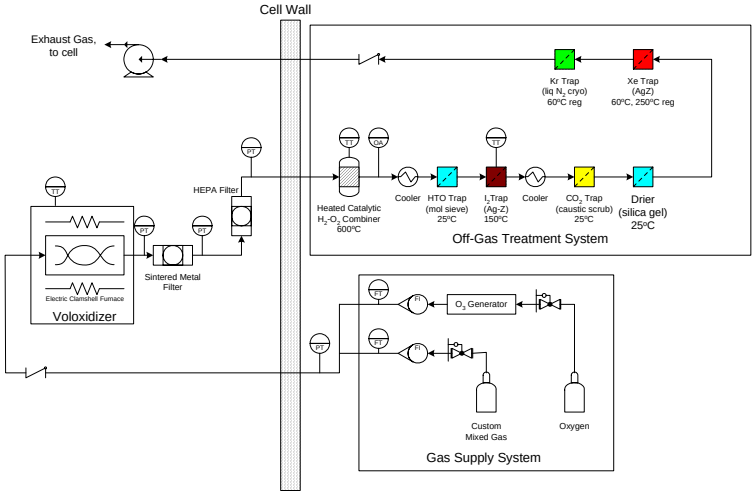

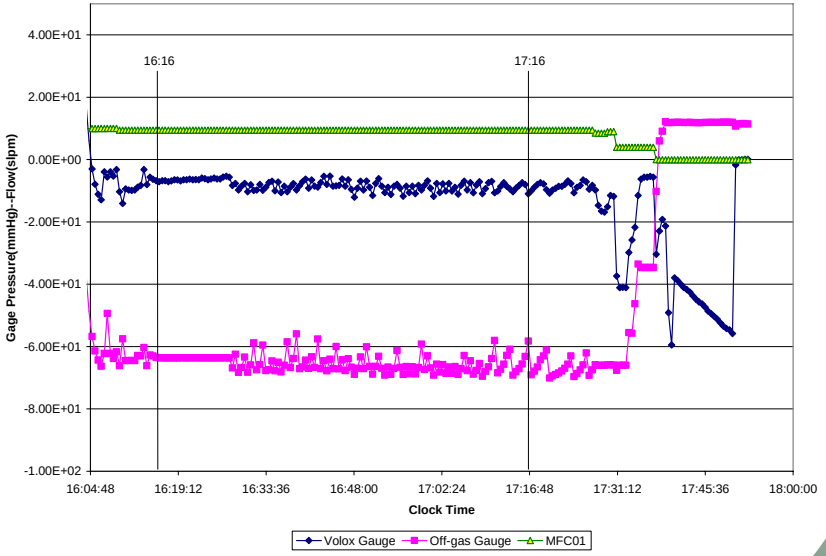

Summary

- **Simplified voloxidation process used to provide feed for first CETE separations run**
- **Primary voloxidizer capable of processing up to 5 kg batches of used fuel designed and built**
- **Completed integrated cold tests with voloxidizer and off-gas treatment systems**
  - **A prerequisite to installation in a nuclear facility**
  - **Tests demonstrated equipment function**
- **Processing of kg quantities of used fuel planned to begin in August**
  - **Requires completion of Readiness Assessment**