Erice seminar 2009

Current status of technology for collection of uranium from seawater

Masao Tamada
Environment and Industrial Materials Research Division
Quantum Beam Science Directorate
Japan Atomic Energy Agency

Watanuki 1233, Takasaki, Gunma 370-1292, Japan

Total amount of uranium resource in seawater is one thousand times of that in terrestrial ores. A polymeric adsorbent being capable of collecting uranium in seawater was developed in early 1980s, since uranium is inevitable resource to operate atomic power plants. This adsorbent fabric was synthesized by radiation-induced graft polymerization which could impart a desired functional group into fibrous trunk polymers. The amidoxime group was selected as a high affinity group for uranium collection from seawater. As a marine experiment, 350kg of the adsorbent stacks was dipped at 7 km offing of Mutsu-Sekine seashore in Aomori prefecture, Japan. In total 9 tests over three years, 1 kg of uranium could be collected successfully as a yellow cake. A new braid type adsorbent has been developed to achieve the practical cost of uranium collection. This braid adsorbent can stand on the bottom of the sea and does not need the heavy adsorbent cage for adsorbent stacks. The adsorption performance in marine experiment indicated 1.5 g-U/kg-ad for 30 day soaking. This value was three times higher than that of adsorbent stacks. The collection cost of uranium was calculated by including processes of adsorbent production, uranium collection, and purification at annual collection scale of 1200 t-U. The uranium collection cost based on the adsorbent durability in the laboratory scale experiment, 32 thousand yen/kg-U. When the braid type is utilized 18 times, the collection cost reaches 25 thousand yen/kg-U which is equivalent to \$96/lb-U_3O_8.

Introduction

Uranium is inevitable mineral resource to generate the electricity in atomic power plants. Uranium has been mined as a uranium ore and its exhaustion within 100 years will be apprehensive. The extremely huge amount of uranium dissolved in the seawater is 4.5 billion tons which is equivalent to a thousand times of that in the terrestrial ores. The uranium in seawater is expected as corresponding resource for increasing demand in the future for atomic power generation. However, uranium concentration is only 3 ppb in almost all area and depth of sea. The collection of such low concentration of uranium in seawater needs the advanced adsorbent which has extremely high selectivity and capacity against uranium in seawater. This paper dealt with the current state of uranium collection technology including development of adsorbent for uranium collection from seawater, demonstration of 1 kg uranium collection from seawater, a practical uranium collection system using braid adsorbent, and cost estimation for uranium collection from seawater.

Uranium adsorbent

Development of uranium adsorbent has researched since the middle of 1960s. Davies *et al*. found that hydrous titanium oxide was a suitable adsorbent for the collection of uranium from seawater in 1964[1)]. Then, many metal oxides were screened in terms of adsorption rate, the hydrous titanium oxide was confirmed as a promising adsorbent for uranium which is dissolved in seawater as uranium oxide tricarbonate, $UO_2(CO_3)_3^{4-}$ owing to pH 8.3[2)]. First experimental plant for collection of uranium from seawater with hydrous titanium oxide was operated by Agency for Natural Resource and Energy, the Ministry of International Trade and Industry and Metal Mining Agency of Japan from 1981 to 1988. Adsorption ability of the hydrous titanium oxide was reported at 0.1g-U/kg-adsorbent (hereafter termed kg-ad). This ability is not enough for practical level and should be improved more than 10 times to reduce the collection cost. In this plant, electricity for pumping of seawater pushes up the collection cost since pumping is necessary to retard the sedimentation of adsorbents in moving bed system for effective contact between adsorbent and seawater. Additionally, the mechanical strength of adsorbent is not enough for wearing motion in moving bed system[3)].

After screening of the many other uranium adsorbents including organic materials, a chemical structure of amidoxime was found as a new promising functional group for collection of uranium from seawater[4)]. Meanwhile, Egawa[5)] and Astheimer[6)] synthesized the polymer beads having cyano groups to obtain the amidoxime adsorbent. Then the cyano groups were converted to amidoxime groups by reacting with hydroxylamine. However, beads type adsorbent needs a package for feasible handing and for effective contact between adsorbent and seawater. On the viewpoint of practical handling in adsorption process, National Institute of Advanced Science and Technology (Shikoku) developed the amidoxime fiber by reacting commercially available acrylonitrile fiber with hydroxylamine. Fibrous adsorbent obtained can utilize the ocean current and the wave motion when it is moored in the sea[7), 8)]. In this case, however, the mechanical strength is not enough for mooring in the seawater. This is because amidoxime groups were imparted evenly in the fiber and the intrinsic mechanical strength of fiber was lost after amidoximation.

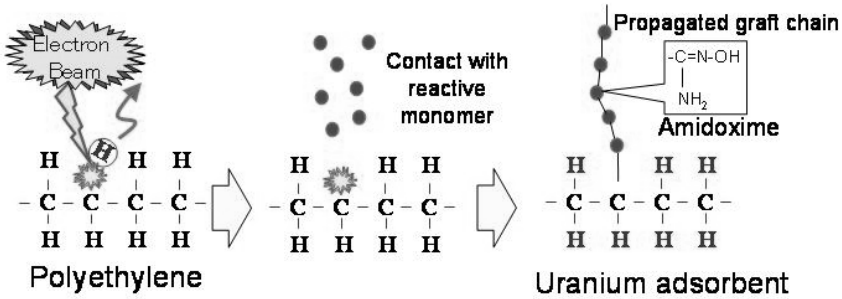

Figure 1 Synthesis of uranium adsorbent with radiation-induced graft polymerization.

To overcome this problem, graft polymerization was applied to synthesize the fibrous amidoxime adsorbent. The graft polymerization is powerful technique to introduce desired functional group to conventionally available polymers. When polyethylene non-woven fabric is selected as a trunk polymer for grafting, the fabrics can play a role of mechanical strength of the obtained adsorbent, since polyethylene fiber is used for a fence against oil discharge on seawater. In the grafting process as shown in Figure 1, polyethylene was irradiated with electron beam and then contacted with the reactive monomer. The graft chains are propagated from the active sites in the irradiated trunk polymer. In such way, acrylonitrile was grafted onto polyethylene non-woven fabrics and subsequently the imparted cyano group of the grafted polymer chain was converted into the amidoxime group. This grafting led the production of adsorbent having enough mechanical strength and high capacity of uranium adsorbent. The detail process for experimental synthesis of amidoxime adsorbent fabric is as follows:

1. Nonwoven fabric made of fibrous polyethylene as a trunk polymer was irradiated with electron beam of 200 kGy in nitrogen gas.
2. Irradiated nonwoven fabric was immersed into the monomer solution which was composed of 50 % dimethyl sulfoxide, 35 % acrylonitrile, and 15 % methacrylic acid after oxygen gas in the monomer solution was substituted with nitrogen gas. The irradiated nonwoven fabric in the monomer solution were warmed up to 40 °C. This temperature was maintained for 4 h for the graft polymerization. The

Table 1 Characteristics of uranium adsorbent against metals in seawater.

Elements	Concentration in seawater[a] [μg/L]	Concentration in adsorbent[b] [μg/g-ad]	Distribution coefficient (b/1000a)
Na	1.08×10^{7}	618.5	0.057
K	3.80×10^{5}	45.9	0.12
Al	2	86.94	4.35×10^{3}
Pb	0.03	108.82	3.62×10^{6}
Ti	1	1.49	1.49×10^{3}
Fe	2	414.44	2.07×10^{5}
Co	0.05	23.57	4.71×10^{5}
Ni	1.7	78.17	4.60×10^{4}
U	3.2	63.72	1.99×10^{4}

Adsorption conditions:0.2g adsorbent 25℃、3L/min seawater, and 7 days.

degree of grafting, which was calculated by the increasing weight, reached 150 %.

3. Grafted nonwoven fabric was reacted with 3 % hydroxylamine solution at 80 °C for 1 h. In this reaction, the cyano groups in the polyacrylonitrile moiety of the grafted nonwoven fabric were converted into amidoxime in the yield of 95 %. Co-graft polymerization of hydrophilic monomer, methacrylic acid, with acrylonitrile was effective for improving the adsorption rate of uranium in seawater[9)]

. The adsorption characteristic of the amidoxime adsorbent is shown in Table 1. Though this adsorbent has low affinity against the alkaline metals such as sodium and potassium ions, transition metal ions of Pb, Fe, Co, Ni, U, and V ions were selectively adsorbed in the seawater. This is a reason why the amidoxime adsorbent can collect the uranium in seawater.

Marine experiment by adsorbent fabric stacks

The amidoxime adsorbent fabric was synthesized in bench scale equipment as shown in Figure 2. The roles of polyethylene nonwoven fabric, 200 m long and 1.5 m wide, were irradiated by gamma ray of 200 kGy. Then, the irradiated fabrics were reacted with the monomer mixture of acrylonitrile and methacrylic acid. The grafting reaction of 5h achieved the degree of grafting of 120 %. After amidoximation, uranium adsorbent fabric of 6,000 m^2 and 700 kg in weight, was obtained to be used for marine experiment.

The uranium adsorbent fabric, 0.2 cm thick, produced was cut into the sheets, 16 cm wide and 29 cm long. The adsorbent stacks were assembled by 120 sheets of adsorbent fabrics alternately with spacer nets as shown in Figure 3.

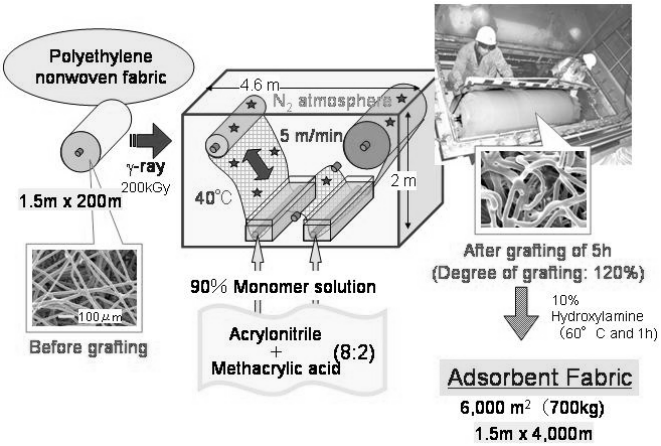

Figure 2 Graft polymerization for bench scale production of uranium adsorbent fabric.

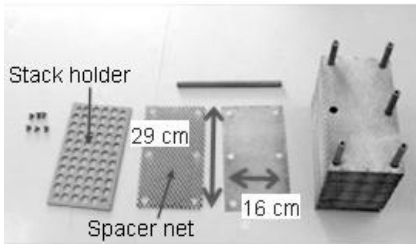

Figure 3 Adsorbent stack composed of adsorbent fabrics and spacer nets.

The collection system for uranium collection using adsorbent stacks is shown in Figure 4. This collection system is composed of floating flame and adsorption beds. The floating frame was stabilized with ropes connoting to four 40 t-anchors placed on the sea bottom. One side of floating flame is 8 m. The square adsorption bed, 16 m^2 in cross-sectional area and 30 cm in height, can pack 144 adsorbent stacks. Three adsorption beds, connected with four ropes, with a span of 1.5 m were hanged in

seawater from the floating frame in the sea depth of 20 m. The frame was designed to

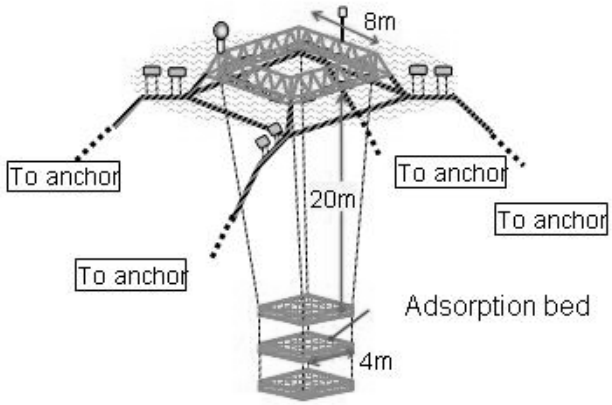

Figure 4 Uranium collection system for adsorbent stacks.

endure the following ocean weather conditions: wind strength of 30 m/s, tidal current of 1.0 m/s, and wave height of 10 m. To evaluate the uranium collection of adsorbent stacks, the collection system was placed in the Pacific Ocean at 7 km offshore from Mustu-Sekine in Aomori prefecture of Japan. The sea depth of this site was approximately 40 m.

The uranium collection experiment was performed from 1999 to 2001. The adsorption beds were hanged out of the seawater by using a crane ship every about 20-40 days. Adsorbed uranium on adsorbent fabric was fractionally eluted by 0.5 M hydrochloric acid. The amount of uranium eluted from the adsorbent fabrics is summarized in Table 2 with seawater temperature. Total amount of uranium collected by this demonstration reached roughly one kilogram in terms of yellow cake. The average ability of the adsorbent was 0.5 g-U/kg-ad for 30 days' soaking. The uranium adsorption was correlated with the temperature of seawater and the wave height[10]. This is because the warming of seawater enhances the chemical adsorption of uranium on the adsorbent. The motion of wave was transferred to the adsorption beds through hanging ropes and the motion of up and down of adsorption cage realizes the effective contact between seawater and adsorbents.

Table 2 Amount of uranium eluted from adsorbent stacks.

Submersion period	Submersion days	Seawater temperature [° C]	Number of stacks	Adsorbed uranium [g]
1999 29 Sep.-20 Oct.	21	19 - 21	144	66
2000 8 Jun.-28 Jun.	20	12 - 13	144	47
28 Jun.-8 Aug.	40	13 - 22	144	66
8 Aug.-7 Sep.	29	20 - 24	144	101
7 Sep.-28 Sep	21	24 - 22	144	76
28 Sep.-19 Oct.	21	20 - 18	144	77
2001 15 Jun.-17 Jul.	32	13 - 18	216	95
18 Jul.-20 Aug.	32	18 - 20	216	119
15 Jun.-20 Aug.	65	13 - 20	72	48
20 Aug.-21 Sep.	31	20 - 19	216	118
18 Jul.-21 Sep	63	18 - 19	144	150
15 Jun.- 21 Sep.	96	13 - 19	72	120
				1083

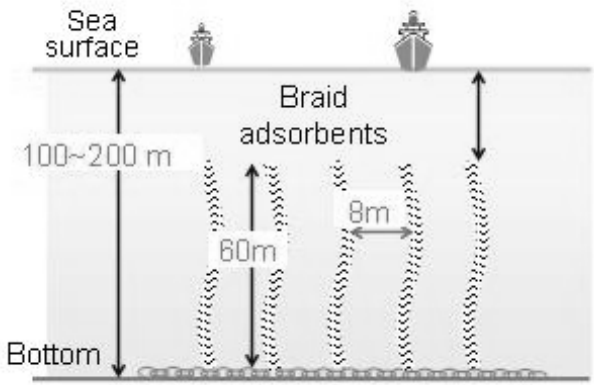

Figure 5 Image of collection system for braid adsorbent.

Improvement of adsorbent for cost reduction

To reduce the collection cost, the most expensive part is analyzed in the collection system using adsorbent stacks. If the floating frame and the adsorbent beds could be deleted, it was found that 40 % of total cost would be reduced. In this reason, a new braid type adsorbent was developed[11)]. When these braid adsorbents are connected to anchor, they can stand like sea weeds on the sea floor as shown in Figure 5 without costly floating flame and adsorption bed[12)].

A certain length of braid adsorbent can be controlled by braiding the uranium adsorbent fiber around the porous polypropylene float, 2cm in diameter. The suitable length of adsorbent fiber surrounding the float was 10 cm. The adsorbent fiber was produced by changing the trunk polymer from the nonwoven fabric to polyethylene fiber in grafting process.

The uranium adsorption of a braid adsorbent, 60 m long, was evaluated in the sea of Okinawa area in Japan. After the braid adsorbent was thrown into the sea, it simultaneously stood on the sea bottom. When collected, it was cut off from the anchor using wireless operation. The braid adsorbent appeared on the sea surface can be recovered by fishing boat as shown in Figure 6. Figure 7 shows the average ability of

Figure 6 Recovery of braid adsorbent in marine experiment at Okinawa.

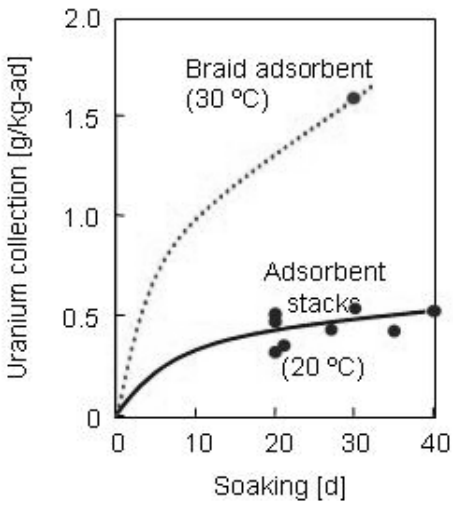

Figure 7 Uranium adsorption of braid adsorbent and adsorbent stacks.

the adsorbent became 1.5 g-U/kg-ad for 30 days' soaking. Temperature of the seawater in Okinawa was 30 °C and 10 °C higher than that of Mutsu area. The rise of 10 degrees in the seawater temperature enhanced 1.5 times of uranium adsorption for the nonwoven fabric adsorbent. As a result, the braid type adsorbent has three times higher than that of adsorbent stacks. Therefore, the braid type adsorbent had 2 times higher adsorption ability of uranium in seawater than the stacks of nonwoven fabric adsorbent owing to the better contact between seawater and adsorbent.

Cost estimation

Uranium collection cost including processes of adsorbent production, uranium collection, and purification was estimated by using braid adsorbents in the scale of 1,200 t-U/y[13)]. Figure 8 shows the effect of repetition usage of adsorbent on uranium cost when the adsorption abilities are 2, 4, and 6 g-U/kg-ad for 60 days' soaking. The adsorption abilities of 2 g-U/kg-ad for 60 days' soaking is equivalent to 1.5 g-U/kg-ad for 30 days' soaking which is average experimental data of uranium adsorption on braid adsorbent.

In this case, the braid adsorbents, 60 m length, with the internal of 8 m should be set in 1,000 km^2 sea area at maximum scale. Since the rise of seawater temperature accelerates the rate of uranium adsorption, the sea area should be near the Japan Current, at the depth from 100 m to 200 m, and without fixed fishing net. The total available sea areas for the collection of uranium from seawater were 6000 m^2 in south east area of Japan.

The champion datum was 4 g-U/kg-ad for 60 days' soaking in Okinawa experiment. In the laboratory experiment, the repetition of 8 times was confirmed. As a result, 32,000 yen/kg-U is considered to be the current promising cost. When the repetition is 18 times, the collection cost will be expected 25,000 yen which is equivalent to \$96/lb-U_3O_8.

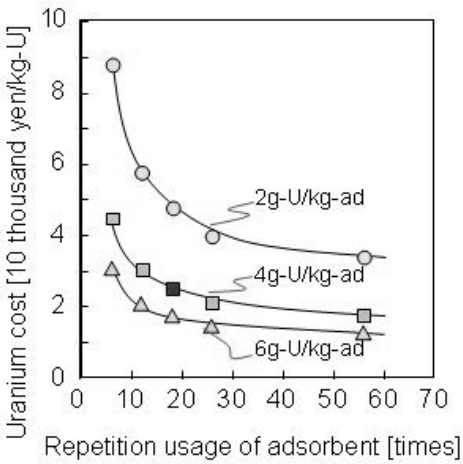

Figure 8 Collection cost of uranium in seawater using braid adsorbent.

Conclusions

Radiation-induced graft polymerization cloud synthesize the amidoxime adsorbent which has enough high mechanical strength for direct mooring in sea and

15 times higher adsorption performance of uranium in seawater than that of former hydrous titanium oxide. The stacks of amidoxime adsorbent fabrics revealed that 1 kg of uranium as yellow cake could be collected by marine experiment. The braid adsorbent was developed to delete the cost for the expensive floating frame and adsorption bed which is necessary for the mooring of adsorbent stacks. Additionally, the adsorption ability rose to 1.5 g-U/kg-ad for 30 days' soaking which was three times value of adsorbent stacks. The cost of the uranium collection could be calculated by braid adsorbent system. The expecting collection cost is 25,000 yen/kg-U which is roughly twice of weekly spot price, \$48/lb-U_3O_8, on August, 2009. As a future planning, the extensive research should be carried out to clarify the number of repetition usage of adsorbent in adsorption/elution of uranium and to dramatically improve the adsorbent ability.

References

1) R. V. Davies, J. Kennedy, R. W. McIlroy, R. Spence, and K. M. Hill, Extraction of uranium from seawater, Nature, 203 (1964) 1110-1115.
2) K. Saito and T. Miyauchi, Chemical Forms of Uranium in Artificial Seawater, *J. Nucl. Sci. and Tech*., **19** (1982) 145-150.
3) N. Ogata, Review on recovery of uranium from seawater, Bull. Soc. Sea Water Sci. Japan, 34 (1980), 3-12.
4) H. J. Schenk, L. Astheimer, E. G. Witte, K. Schwochau, Development of sorbers for the recovery of uranium from seawater. 1. Assessment of key parameters and screening studies of sorber materials, *Sep. Sci. Technol*., **17** (1982) 1293-1308.
5) H. Egawa and H. Harada, Recovery of uranium from sea water by using chelating resins containing amidoxime groups, *Nippon Kagaku Kaishi*, (1979) 958-959.
6) L. Astheimer, H.J. Schenk, E.G. Witte, and K. Schwochau, Development of sorbers for the recovery of uranium from seawater. Part 2, *Sep. Sci. Technol.*, **18** (1983) 307-339.
7) H. Nobukawa, M. Tamehiro, M. Kobayashi, H. Nakagawa, J. Sakakibara, and N. Takagi, Development of floating type-extraction system of uranium from sea water using sea water current and wave power, *J. Shipbuild. Soc. Japan*, **165** 281-292 (1989).
8) H. Nobukawa, M. Kitamura, M. Kobayashi, H. Nakagawa, N. Takagi, and M. Tamehiro, Development of floating type-extraction system of uranium from sea water using seawater current and wave power, *J. Shipbuild. Soc. Japan*, **172** (1992) 519-528.
9) T. Kawai, K. Saito, K. Sugita, T. Kawakami, A. Kanno, A. Katakai, N.,Seko, and T. Sugo, Preparation of hydrophilic amidoxime fibers by cografting acrylonitrile and methacrylic acid from optimized composition, *Radiat. Phys. Chem.* **59** (2000) 405-411.
10) N. Seko, A. Katakai, S. Hasegawa, M. Tamada, N. Kasai, H. Takada, T. Sugo, K. Saito, Aquaculture of uranium in seawater by fabric-adsorbent submerged system, *Nuclear Technology*, **144** (2003) 274-278.
11) N. Seko, M. Tamada, N. Kasai, F. Yoshii, and T. Shimizu, Synthesis and

evaluation of long braid adsorbent for recovery of uranium from seawater, *Proceedings of Civil Engineering in the Ocean*, **18** (2002) 737-742.

12) T. Shimizu and M. Tamada, Practical scale system for uranium recovery from seawater using braid type adsorbent, *Proceedings of Civil Engineering in the Ocean*, **20** (2004) 617-622.

13) M. Tamada, N, Seko, N. Kasai and T. Shimizu, Cost estimation of uranium recovery from seawater with system of braid type adsorbent, *Transactions of the Atomic Energy Society of Japan*, **5** (2006) 358-363.