Exercises for the resistive wire gas tube electronics

Introduction

This practical aims to give the students an impression of the factors affecting the performance of a resistive wire gas tube. Since there is no neutron source available at the summer school, the gas tube is emulated with a chain of resistors and capacitors. Charge is injected in the resistor chain with a series of resistors, connected to the (input) sockets labelled Tap, using a pulse generator.

The schematic of the electronics inside the resistive wire gas tube emulator box is shown below:

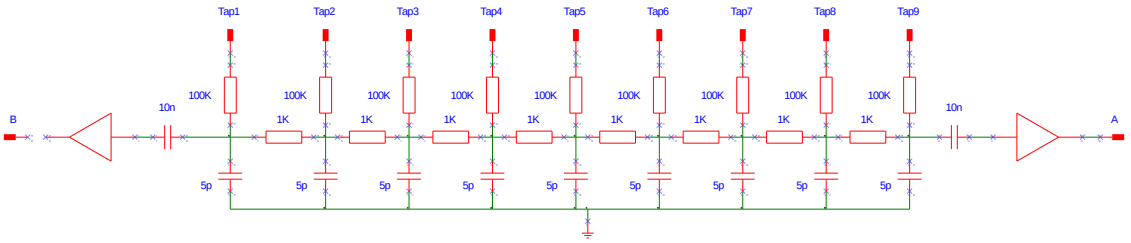

The emulator box also contains the high voltage decoupling capacitors (10nF) used in (nearly) all dedicated electronics, because the anode wire of the gas tube is supplied with high voltage. Finally there are 2 transimpedance preamplifiers in the emulator box, one at each end of the resistor chain, needed to amplify the signal with a low noise. The preamplifier outputs are connected to the (output) sockets labelled A and B on the emulator box.

The signals from the A and B outputs are sent to a (high speed) digitiser, which records the signals and sends the traces to the (built-in) computer. The computer will process and analyse the signals to calculate the position of the "emulated neutron absorption". A block schematic of the setup and the interconnection between the equipment is shown below:

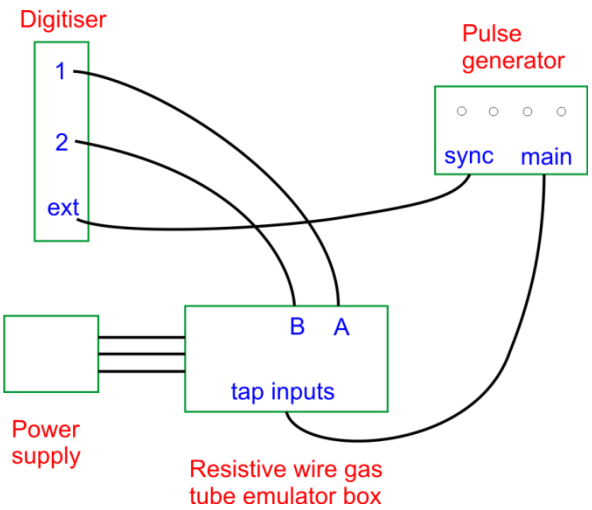

The computer program has the ability to perform digital signal processing (DSP) for the shaping/filtering of the A and B signals to optimise the position resolution of the emulated detector.

Exercises

At the start, ask the tutor to check the cabling and set the pulse generator to these settings:
Function mode: Pulse, period: ~100us, pulse width: ~200ns and amplitude: ~1V (amplitude potmeter at 2.5)

Feel free to familiarize yourself with the oscilloscope and pulse generator before starting the tasks.

Task 1: Qualitative behaviour of signals.

1) Connect the preamplifier outputs A and B to the oscilloscope. If possible, set the oscilloscope to trigger on the cable labelled: Trigger.
2) Connect the output of the pulse generator to input 5 (tap 5) of the "resistive wire tube".
3) Set up the oscilloscope so that you get a good impression of the signals.
4) Connect the output of the pulse generator to tap 1, tap 2, tap 3 and so on.
5) Observe the amplitude and relative time shift of the signals on the scope.

- Question 1: Does the amplitude of the signals vary as you expected?
- Question 2: Did you notice a change in the shape of the signals and a shift in relative time shift/delay of the pulses for the various taps? Why does this happen?

Now you have a qualitative impression of the signals, let us get more quantitative data using the digitiser (green box).

Ask the tutor to start the digitiser program and make sure the settings are correct.

Familiarize yourself with the computer program.

Task 2: Measure the position of the peak in the spectrum shown on the computer screen as a function of tap input (equivalent to position in a resistive wire gas tube).

1) Connect the output of the pulse generator to tap 1. Start data collection of the digitiser and enable the peak fitting option. Optionally zoom in on the peak to see the peak and judge the fitting.
2) Write down the position and FWHM of the peak in Table 1.
3) Repeat steps 1 and 2 for the other taps.

- Q1: Is the relation between the taps and peak centres linear?
- Q2: Why is peak for tap 1 not at position 0 and tap 9 at position 1023?

Congratulations, you have now been able to "detect" the position of neutron absorption. Let us now see how we can make position resolution of the detector as good as possible. Let us start with looking at how the shape of the signals varies as a function of integration and differentiation time.

Task 3: Signal filtering and pulse shapes

1) Connect the output of the pulse generator to tap 5.
2) Select the signals option from the Analysis drop down list (should initially show Peak(A)/Peak(A+B)).
3) Tick the Enabled tick box in the integration panel.
4) Set the integration time to 10n (s). Does the shape of the signal change?
5) Try different values for the integration time. Notice that the shape/width of the signal is varying is varying as a function of integration time.
6) Set the integration time to 100ns.

7) Tick the Enabled tick box in the differentiation panel and set the differentiation time to 1 µs.
8) Try different values for the differentiation time.

- Does the shape/width of the signal change as you expected?

Task 4: Optimising integration time.

1) Select the Peak(A)/Peak(A+B) option from the Analysis drop down list.
2) Disable the differentiation
3) Disable the integration
4) Start the data collection and write down the FWHM of the peak in Table 2.
5) Enable the integration
6) Set the integration time to 10ns. Start data collection and write down the FWHM
7) Repeat step 6 for the following integration times: 25n, 50n, 100n and 200n and 300n.
8) What is the optimum integration time?

Task 5: Optimising differentiation time.

1) Disable the integration
2) Disable the differentiation
3) Start data collection and write down the FWHM of the peak in Table 3.
4) Enable the differentiation
5) Set the differentiation time to 10n (s). Start data collection and write down the FWHM
6) Repeat step 5 for the following differentiation times: 100n, 200n, 500n, 1µ, 5µ and 10µs.
7) What is the optimum differentiation time?

You have now a first approximation of the optimum integration and differentiation time. In reality you would use this first guess for further optimisation of the integration and differentiation time by applying (small) variation of the integration and differentiation time when both are applied together. If you wish you might do so in this practical as well.

Let us now have a look at a very important parameter/property of the signal: the offset voltage. In the early days of the resistive wire gas tubes, offsets were seriously hampering the accuracy of the position reconstruction.

Task 6: Estimating the effect of offset voltages

1) Enable both the integration and differentiation
2) Set the integration and differentiation to the optimal values that you found in tasks 4 and 5.
3) Connect the pulse generator to tap 1.
4) Set the offset for Channel A to -2m . Keep the offsets for channel B at 0.
5) Start data collection and write down the peak position in Table 4.
6) Repeat steps 4 and 5 for the following offsets: 0, 1m, 2m and 5m.
7) Connect the pulse generator to tap 3 and repeat steps 4-6 for this tap position.
8) Repeat the previous steps for taps 5, 7 and 9, until you covered all combinations listed in Table 4.

- Did you notice how even a small offset gives a significant shift of the (peak) position?

In the first part of this task, you have varied the offset only for Channel A and kept the offset for Channel B at 0. In reality both channels A and B will have an offset. To get an impression of what happens when both channels have offset voltages, you could give channels A and B the same offset in the second part of task 6.

9) Connect the pulse generator to tap 1.
10) Set the offset for both Channel A and B to -2m .
11) Start data collection and write down the peak position in Table 5.
12) Repeat the measurements for all options listed in Table 5.

- Do these results make sense to you?

We have now covered the most aspect of the resistive wire gas tubes and associated electronics. The position resolution as function of the gain of the gas tube is hard to emulate because the pulse height distribution becomes so distorted at high gains.

If there is time left in this practical, you might compare the performance of 2 commonly used position reconstruction algorithms:

1) Calculate the position using the formulae A/(A+B) at the peak of the (A+B) signal
2) Calculate the position from the area (i.e. charge) under the signals, using the formulae (Area A)/(Area A + Area B).

Concentrate in this comparison on the position resolution (without offsets) and the effect of offsets.

Table 1: Peak position and FWHM of the peak as a function of tap.

Tap	Peak centre	FWHM
1		
2		
3		
4		
5		
6		
7		
8		
9		

Table 2: Position resolution as function of integration time.

Integration time	FWHM in position plot
disabled	
10 ns	
25 ns	
50 ns	
100 ns	
200 ns	
300 ns	

Table 3: Position resolution as function of differentiation time.

Differentiation time	FWHM in position plot
disabled	
10 ns	
100 ns	
200 ns	
500 ns	
1 µs	
5 µs	
10 µs	

Table 4: Position resolution as function of pulse height. Vary the offset only for Channel A; keep the offset for Channel B at 0.

Offset for channel A	Tap 1, Peak centre	Tap 3, Peak centre	Tap 5, Peak centre	Tap 7, Peak centre	Tap 9, Peak centre
-2 m					
0					
1 m					
2 m					
5 m					

Table 5: Position resolution as function of pulse height. Vary the offset for both Channels A and B at the same time.

Offset for channels A and B	Tap 1, Peak centre	Tap 3, Peak centre	Tap 5, Peak centre	Tap 7, Peak centre	Tap 9, Peak centre
-2 m					
0					
1 m					
2 m					
5 m					