Special Sample Environments

Eddy Lelièvre-Berna

lelievre@ill.eu - http://www.ill.eu/sane

© Institut Laue Langevin

Soft matter

Unified control

Polarised neutrons

Gas sorption

High temp.

High fields

Low temp.

High pressure

© Institut Laue Langevin

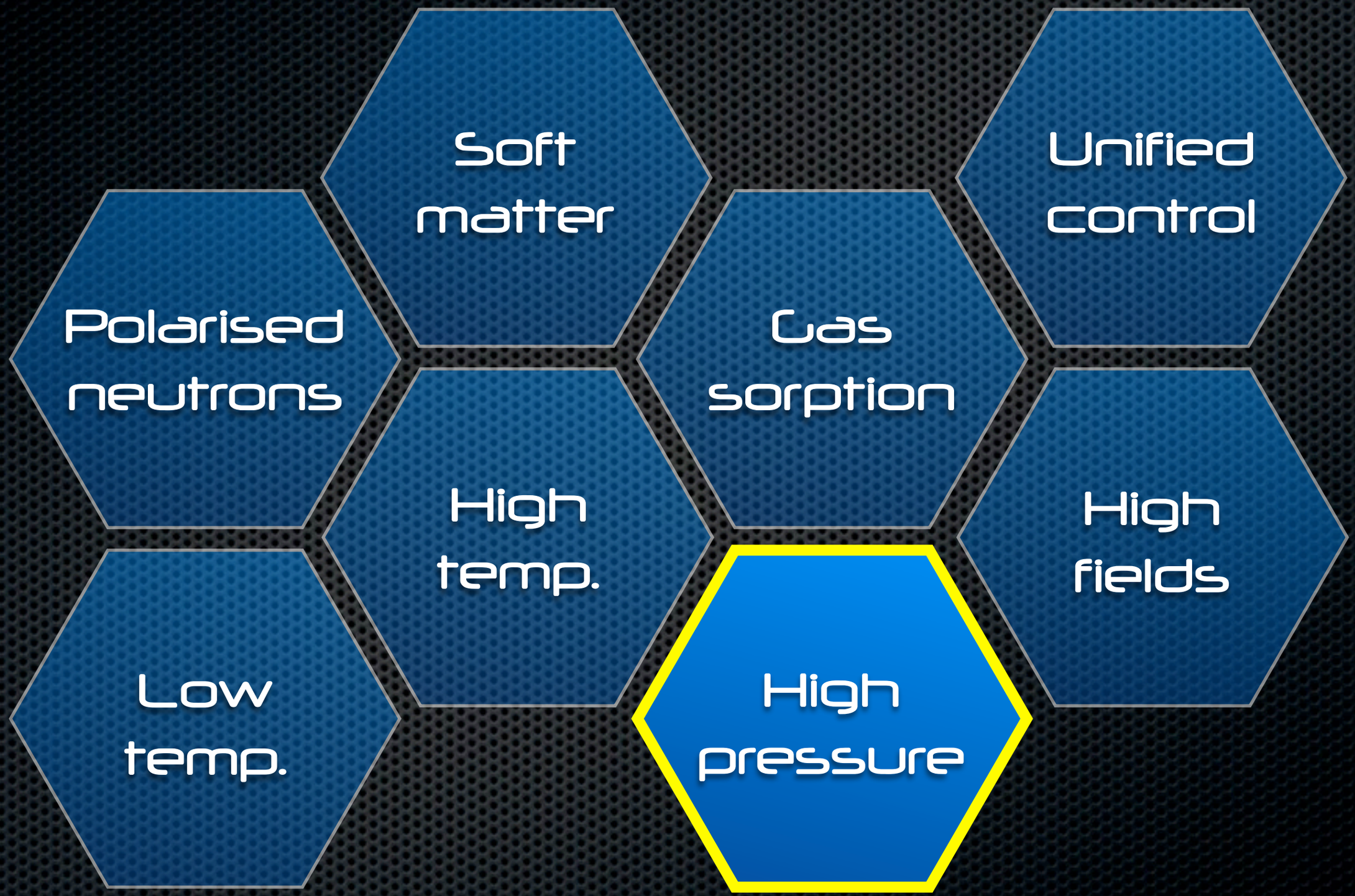

© Institut Laue Langevin

High pressure

- **Al Cells (He gas)**

  0.25 to 0.5 GPa (0.7 GPa ?)

- **CuBe, TiZr Clamps (liquid)**

  1 to 3 GPa (4 GPa ?)

- **Presses (He gas)**

  0.5 to 10 GPa (20 GPa)

- **>20GPa requires a dedicated instrument!**

© Institut Laue Langevin

High pressure

- **Al Cells (He gas)**

  0.25 to 0.5 GPa (0.7 GPa ?)
- **CuBe, TiZr Clamps (liquid)**

  1 to 3 GPa (4 GPa ?)
- **Presses (He gas)**

  0.5 to 10 GPa (20 GPa)
- **>20GPa requires a dedicated instrument!**

© Institut Laue Langevin

High pressure

- **Al Cells (He gas)**

  0.25 to 0.5 GPa (0.7 GPa ?)
- **CuBe, TiZr Clamps (liquid)**

  1 to 3 GPa (4 GPa ?)
- **Presses (He gas)**

  0.5 to 10 GPa (20 GPa)
- **>20GPa requires a dedicated instrument!**

© Institut Laue Langevin

High pressure

- **Al Cells (He gas)**

  0.25 to 0.5 GPa (0.7 GPa ?)
- **CuBe, TiZr Clamps (liquid)**

  1 to 3 GPa (4 GPa ?)
- **Presses (He gas)**

  0.5 to 10 GPa (20 GPa)
- **>20GPa requires a dedicated instrument!**

© Institut Laue Langevin

High pressure

- **Al Cells (He gas)**

  0.25 to 0.5 GPa (0.7 GPa ?)
- **CuBe, TiZr Clamps (liquid)**

  1 to 3 GPa (4 GPa ?)
- **Presses (He gas)**

  0.5 to 10 GPa (20 GPa)
- **>20GPa requires a dedicated instrument!**

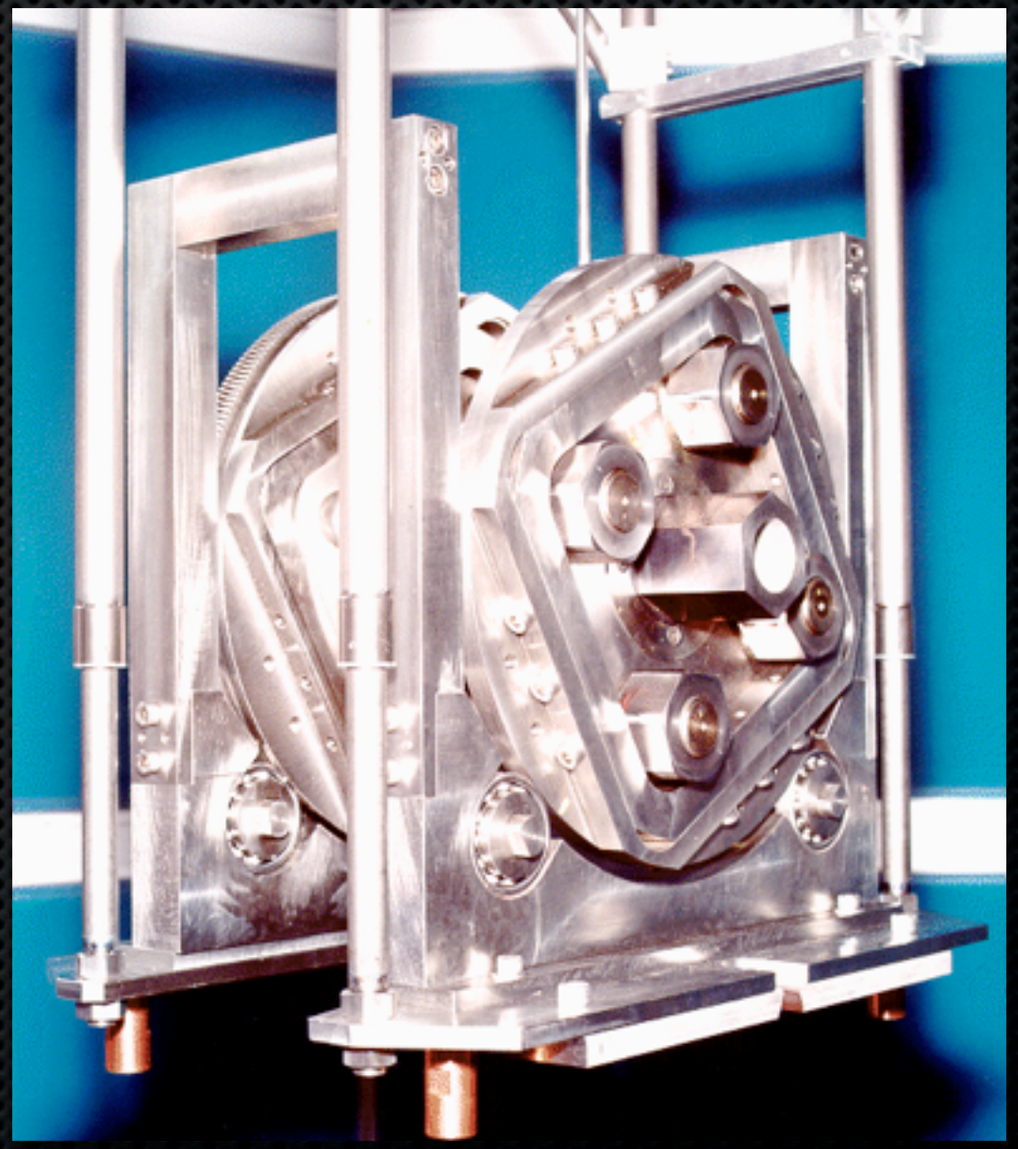

© Institut Laue Langevin

High pressure

- **Al Cells (He gas)**

  0.25 to 0.5 GPa (0.7 GPa ?)

- **CuBe, TiZr Clamps (liquid)**

  1 to 3 GPa (4 GPa ?)

- **Presses (He gas)**

  0.5 to 10 GPa (20 GPa)

- **>20GPa requires a dedicated instrument!**

© Institut Laue Langevin

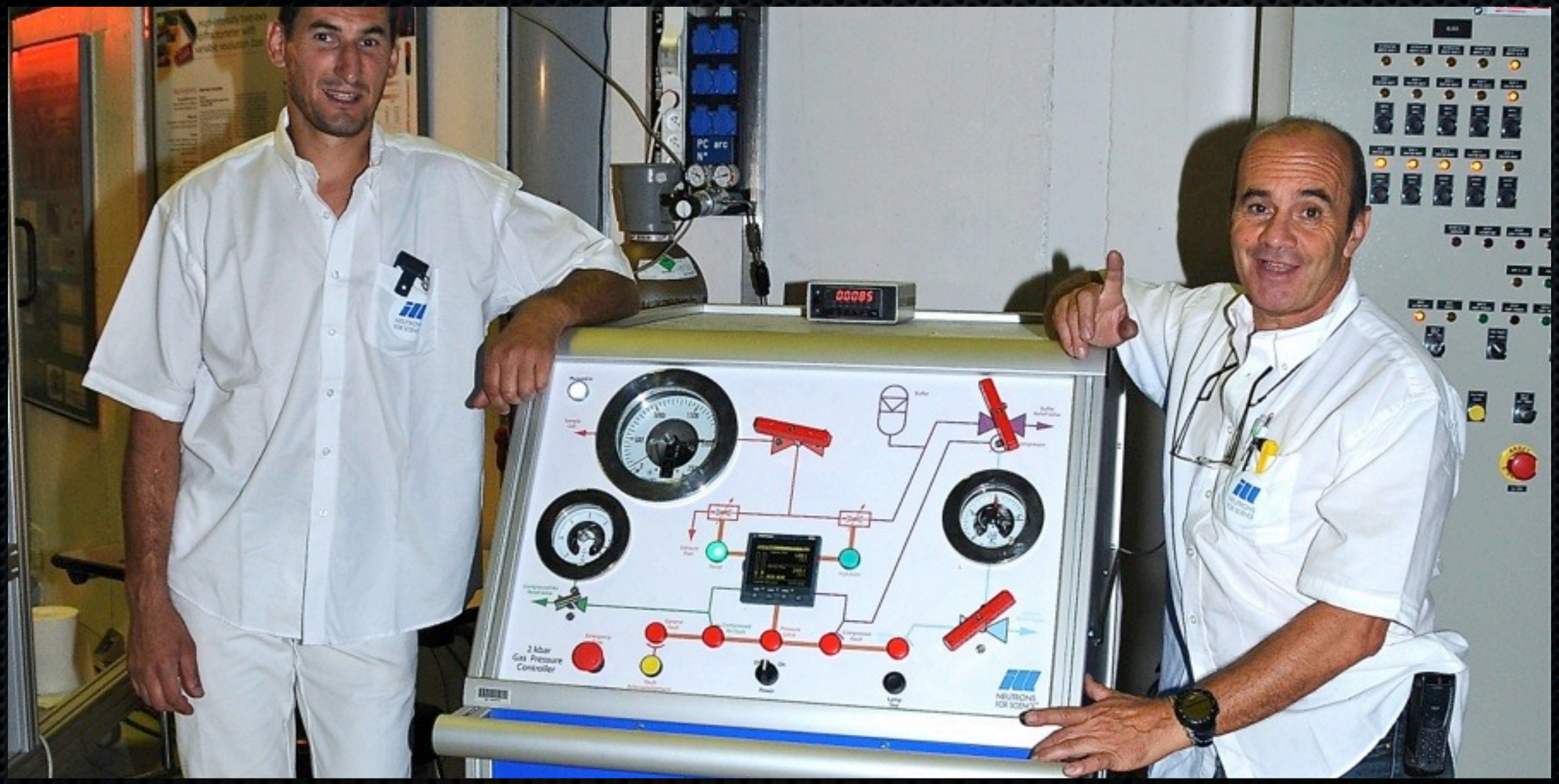

Automatic controller

up to 20 GPa in 20 min - 10^{-4} stability

© Institut Laue Langevin

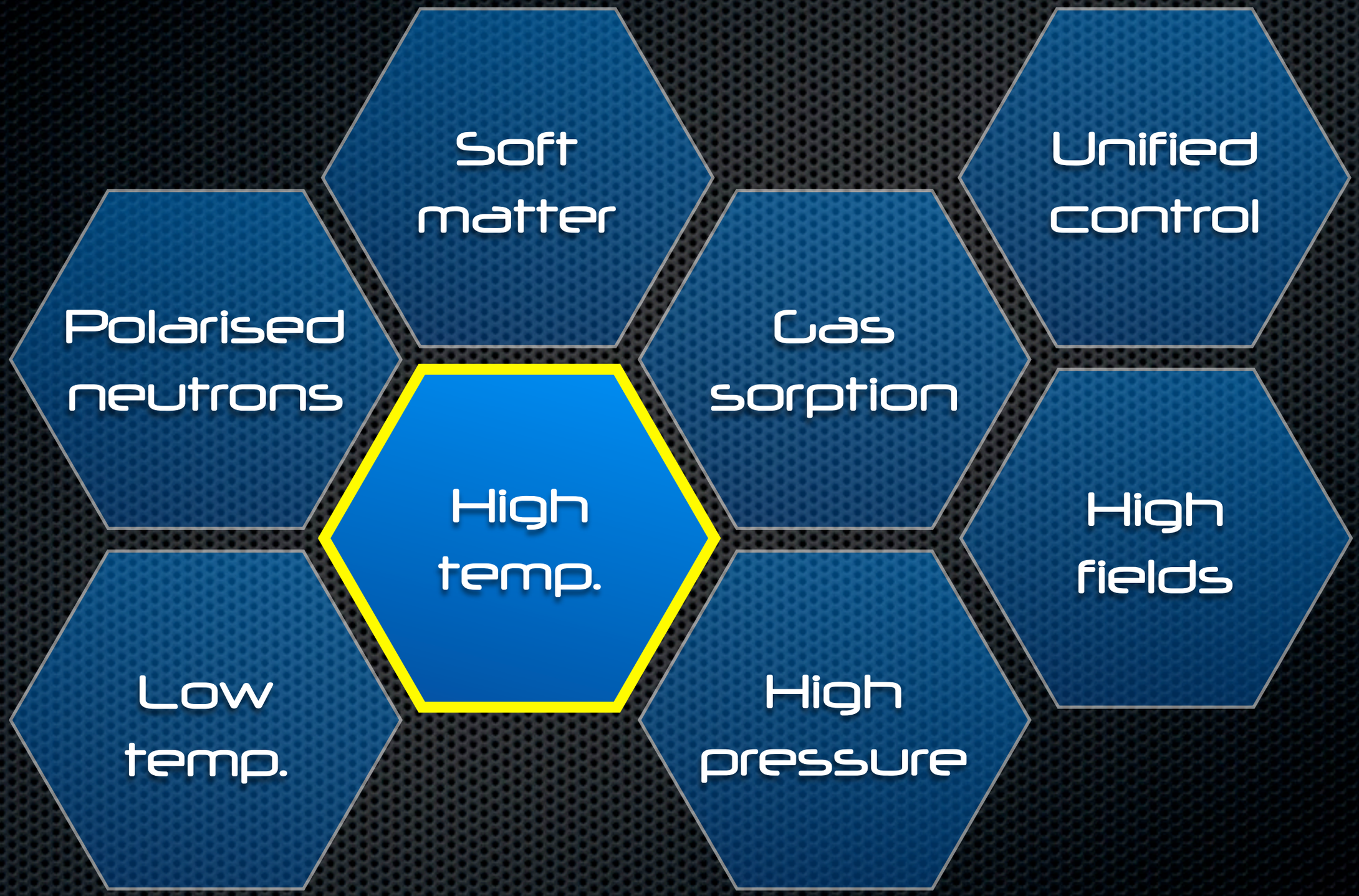

© Institut Laue Langevin

High temperature

- **Resistive furnaces (Ø340)**
  - 320 to 1900K
  - V, Nb resistors in beam
  - Sapphire windows
- **Auto-power racks (350 kg)**
  - 2 kVA and 3.5 kVA
  - Ethernet I/O
- **Mirror furnaces**

© Institut Laue Langevin

High temperature

- **Resistive furnaces (Ø340)**
  - 320 to 1900K
  - V, Nb resistors in beam
  - Sapphire windows
- **Auto-power racks (350 kg)**
  - 2 kVA and 3.5 kVA
  - Ethernet I/O
- **Mirror furnaces**

© Institut Laue Langevin

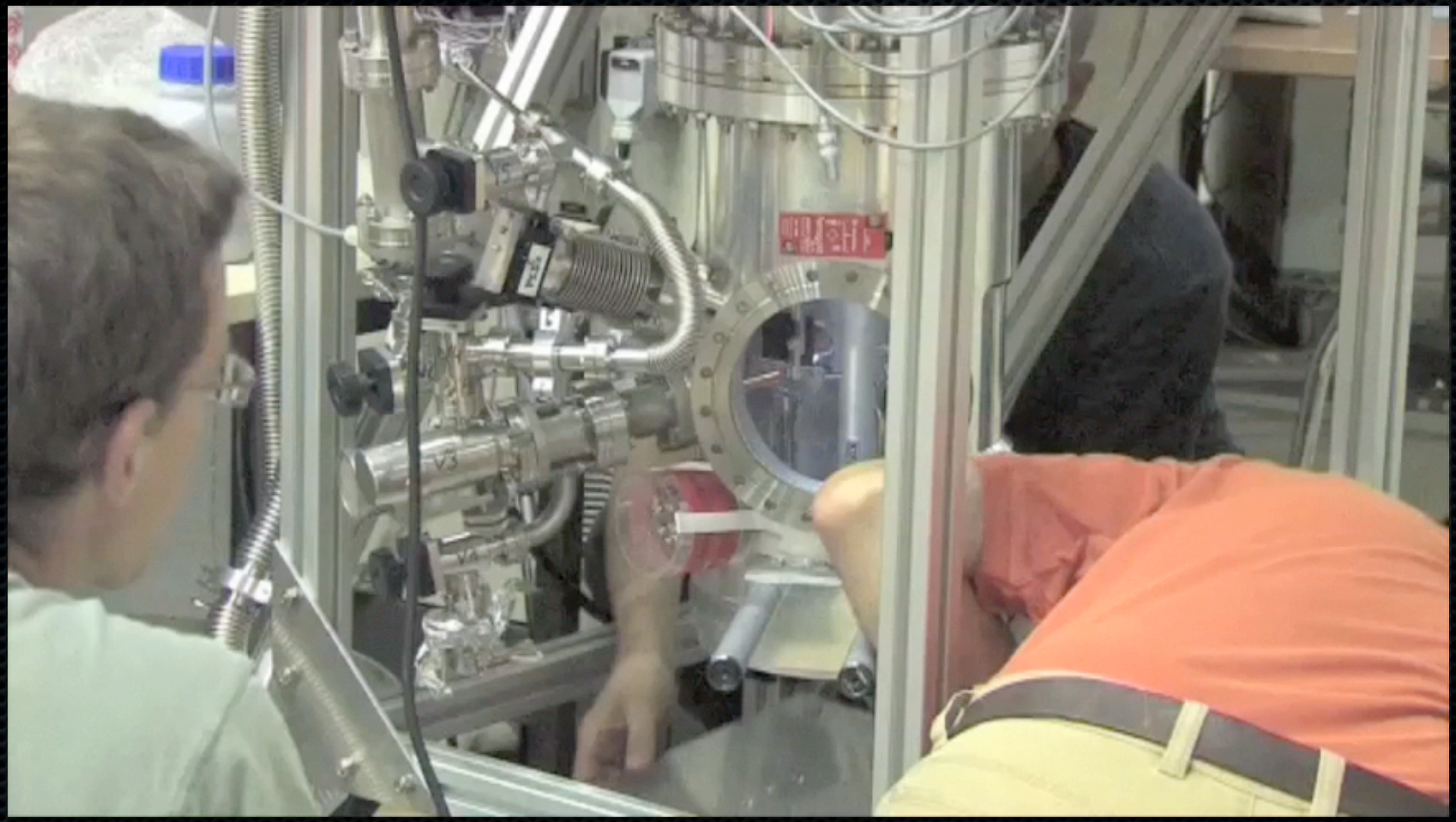

Levitation furnace

Requires more than 3 m^2 on the instrument

© Institut Laue Langevin

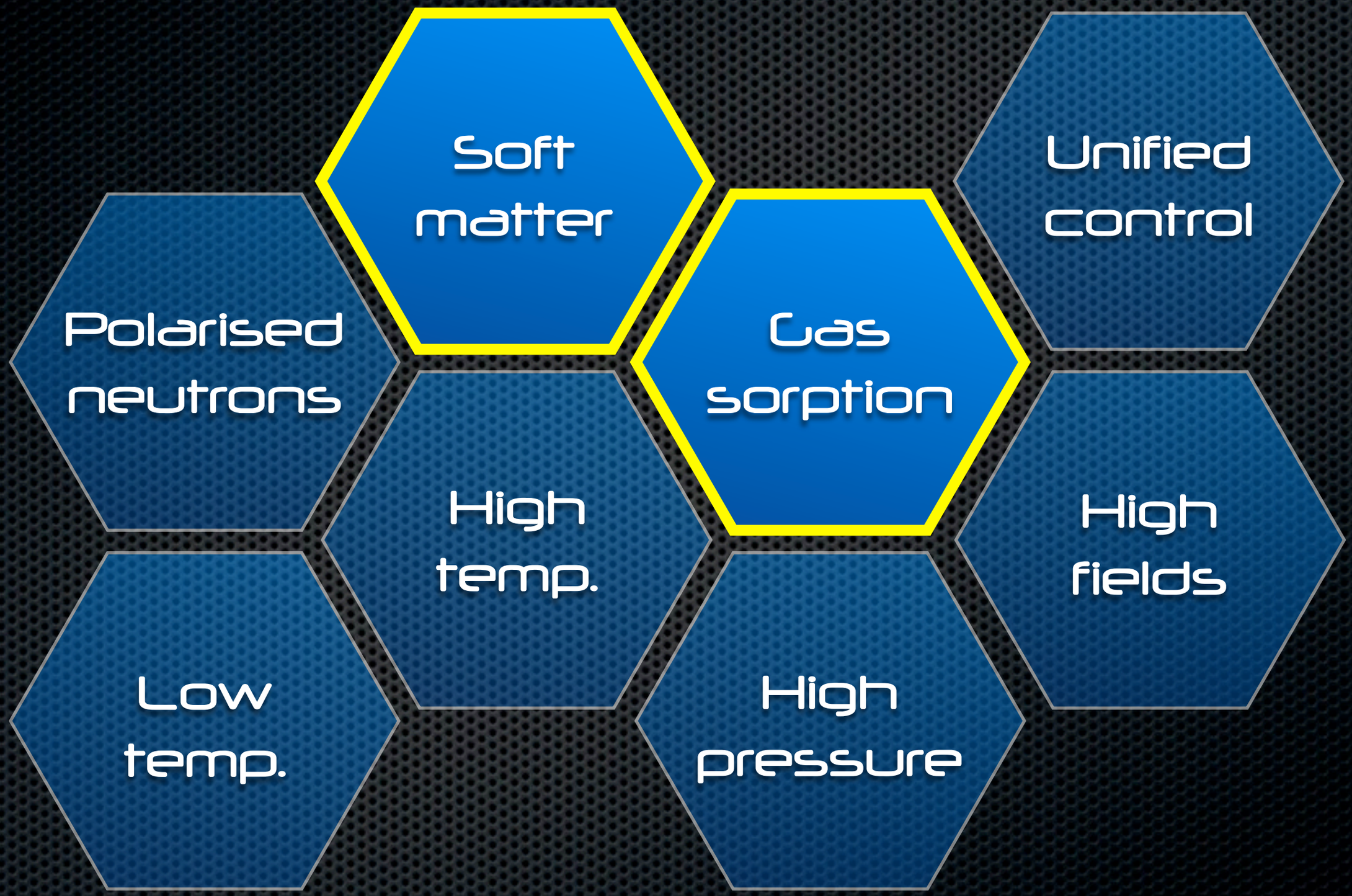

© Institut Laue Langevin

Gas Sorption

Volumetric sorption analyser + inserts + …

© Institut Laue Langevin

Gas Sorption

Volumetric sorption analyser + inserts + ...

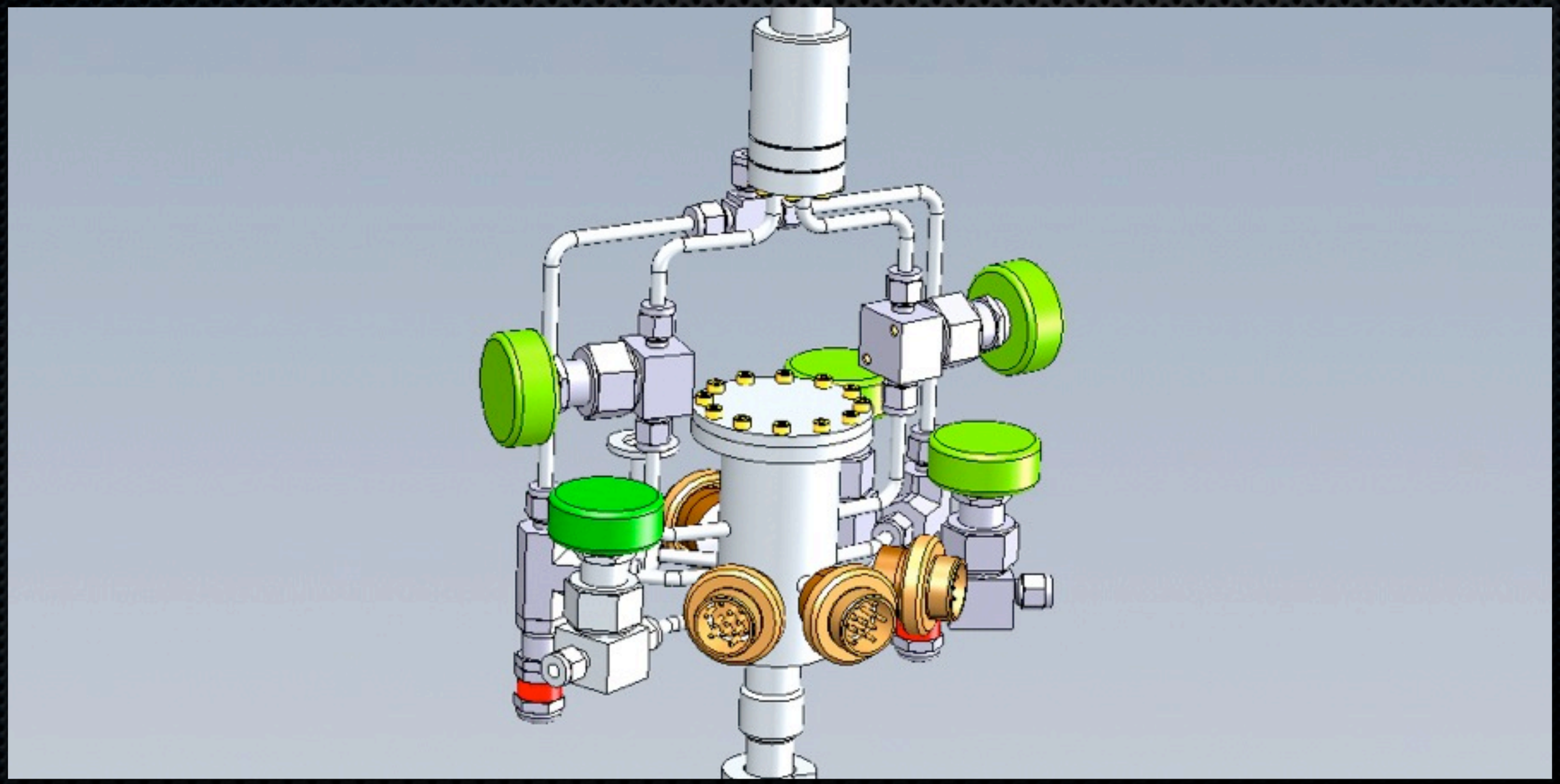

© Institut Laue Langevin

Gas Sorption

Volumetric sorption analyser + insert + …

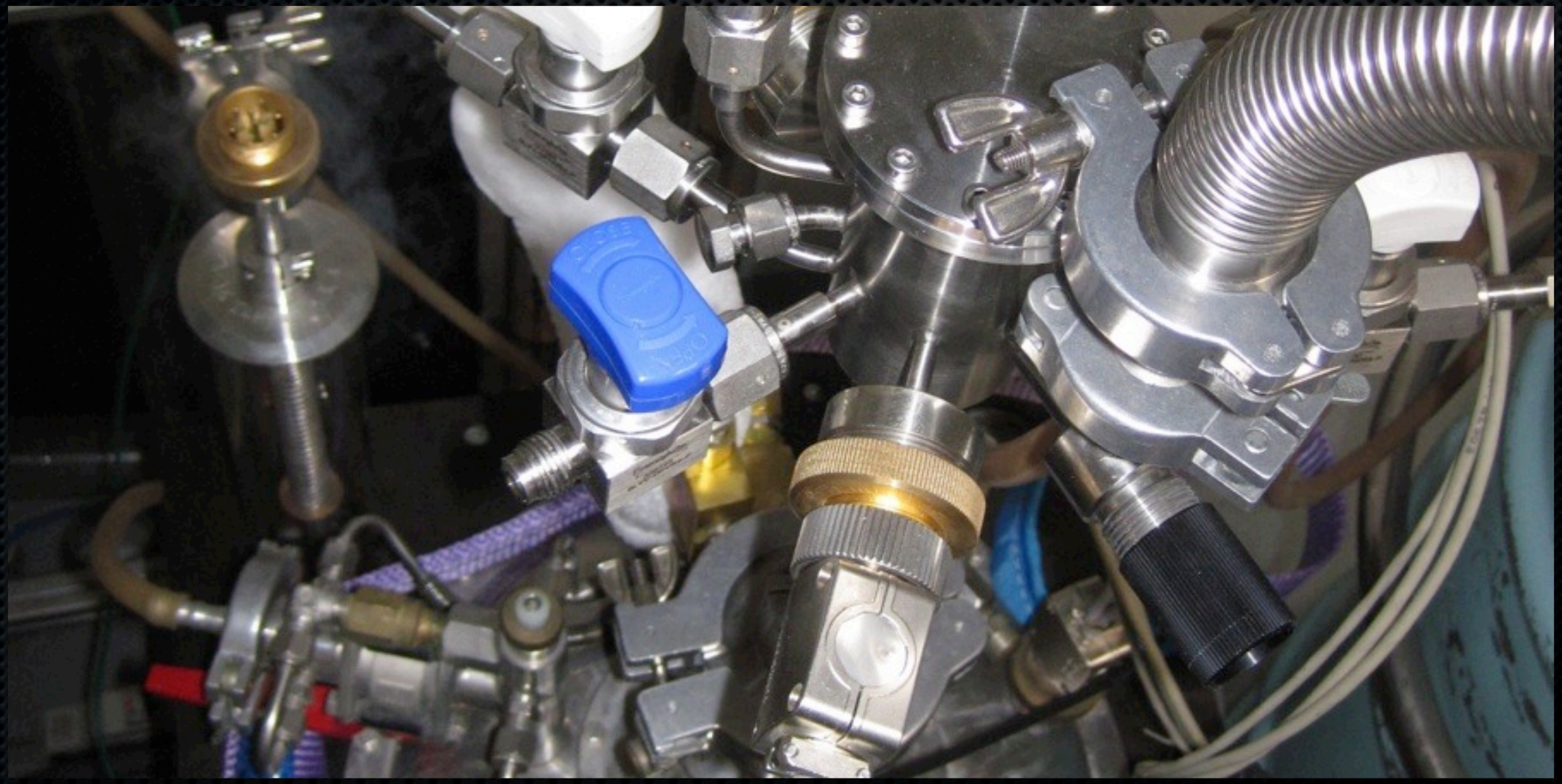

© Institut Laue Langevin

Gas Sorption

© Institut Laue Langevin

Soft & Bio Materials

- Stop-flow observation heads,
- High-pressure cells for SANS, NSE,
- Electric field cells for SANS, ToF,
- Light-scattering setups for SANS (static & dynamic),
- Humidity chambers for SANS, ToF, Reflectometry,
- Acoustic levitation, Rheometers,
- Adiabatic calorimetry, etc…

© Institut Laue Langevin

Soft & Bio Materials

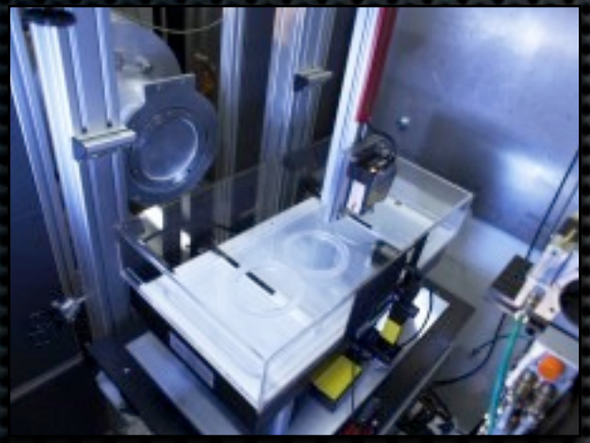

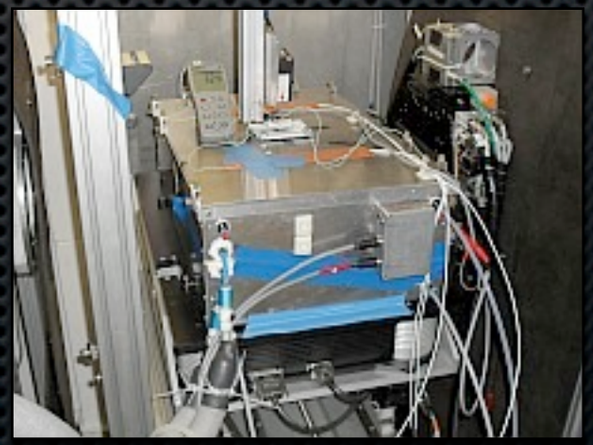

© Institut Laue Langevin

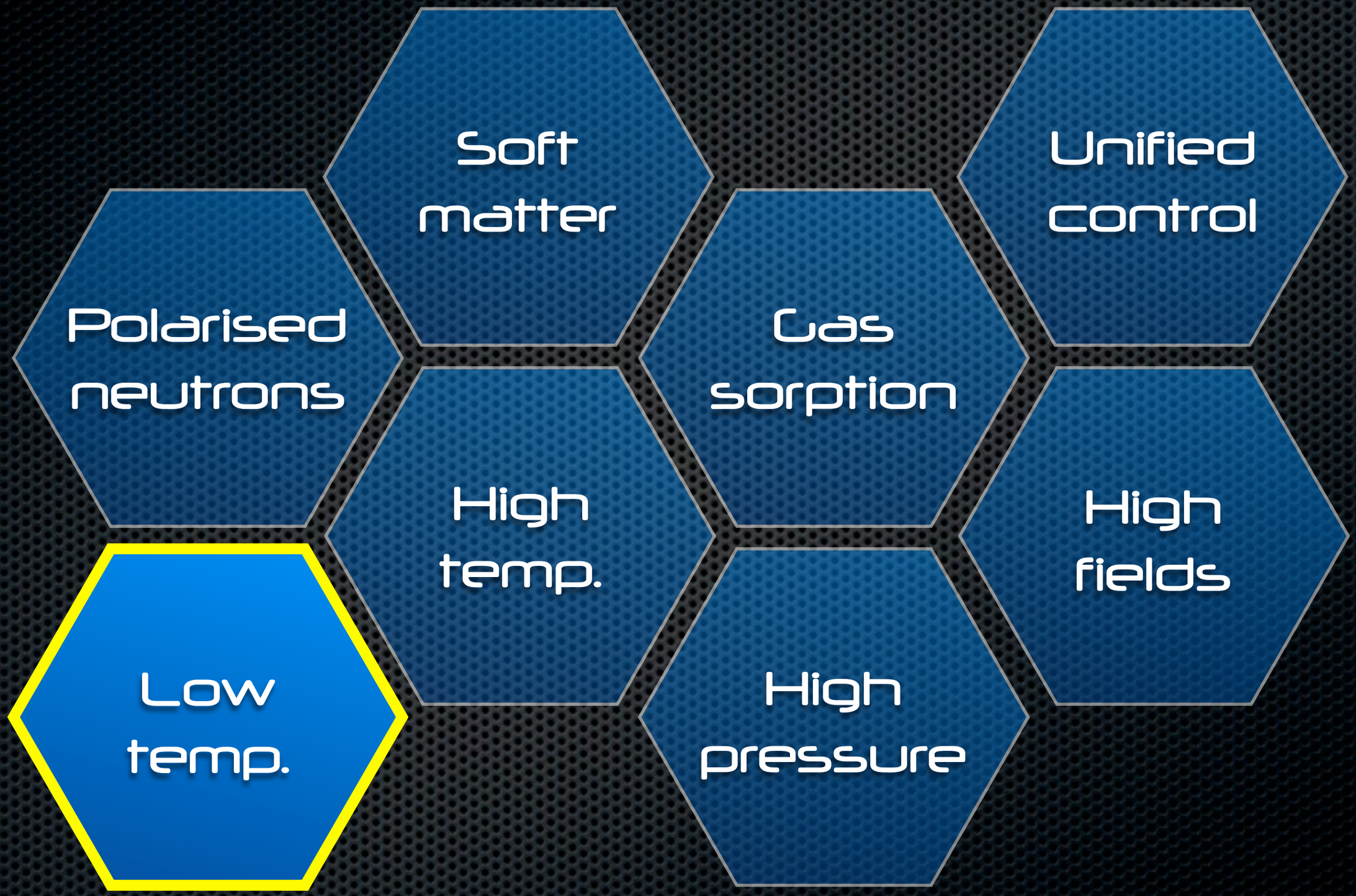

© Institut Laue Langevin

Cryogenics

- **Cryostats (Ø330-450 mm)**

  1.5 / 2.8 to 320 K

- **Cryofurnaces (Ø330-450 mm)**

  1.5 to 550 / 650 K

- **Compact dry cryostats**

  1.8 to 320 K with JT

  2.7 to 620 K without JT

- **Space for sample changers ?**

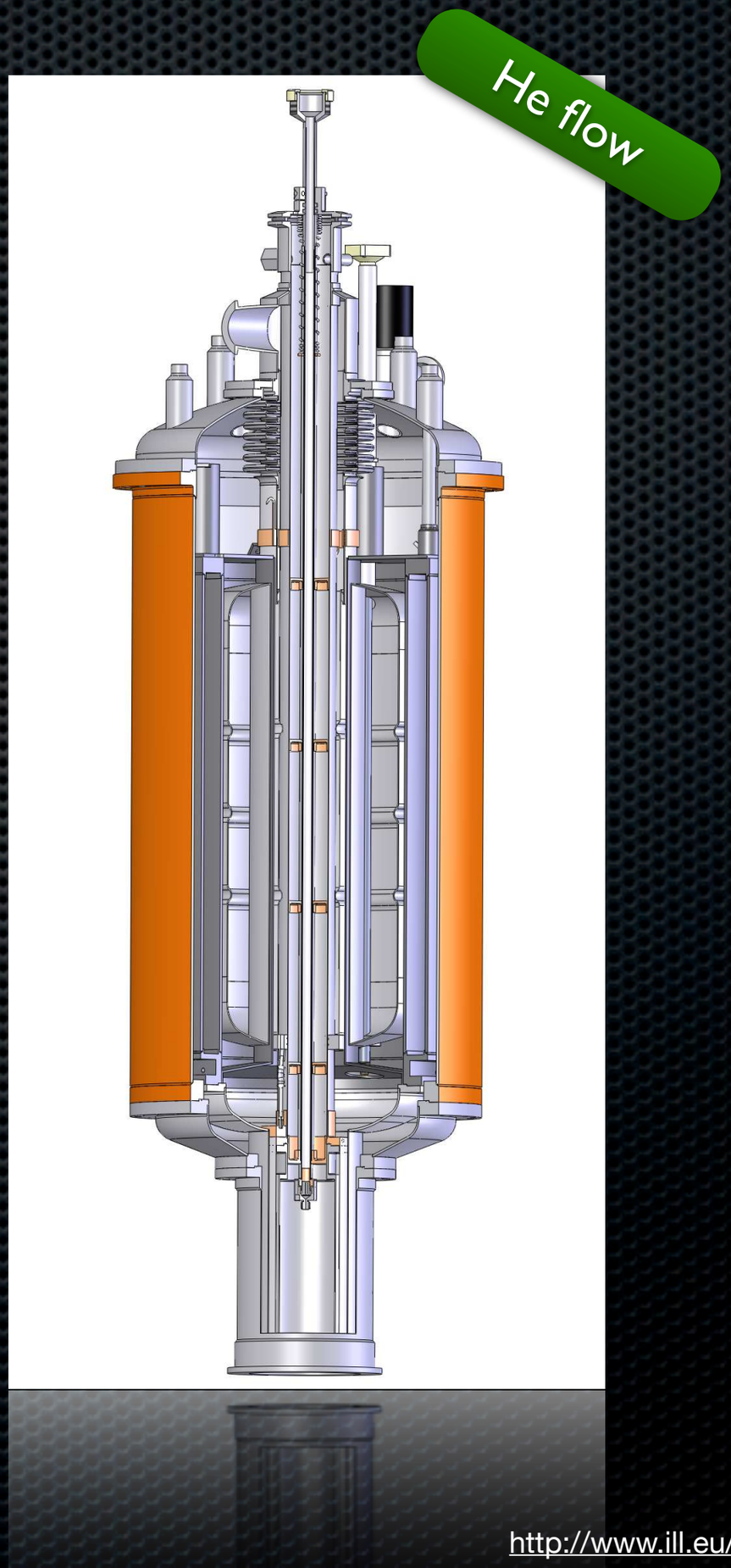

© Institut Laue Langevin

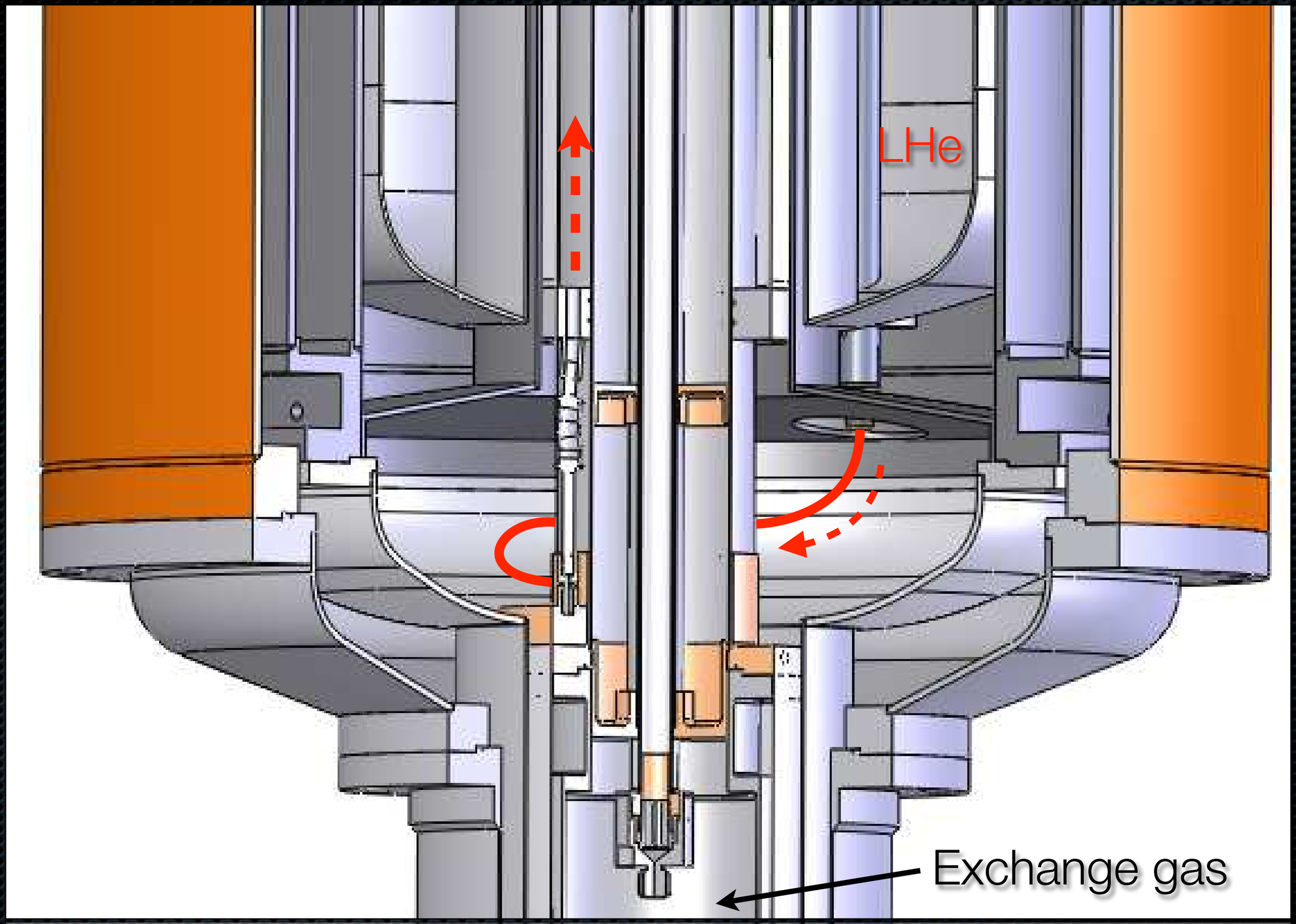

© Institut Laue Langevin

Cryogenics

- **Cryostats (Ø330-450 mm)**

  1.5 / 2.8 to 320 K
- **Cryofurnaces (Ø330-450 mm)**

  1.5 to 550 / 650 K
- **Compact dry cryostats**

  1.8 to 320 K with JT

  2.7 to 620 K without JT
- **Space for sample changers ?**

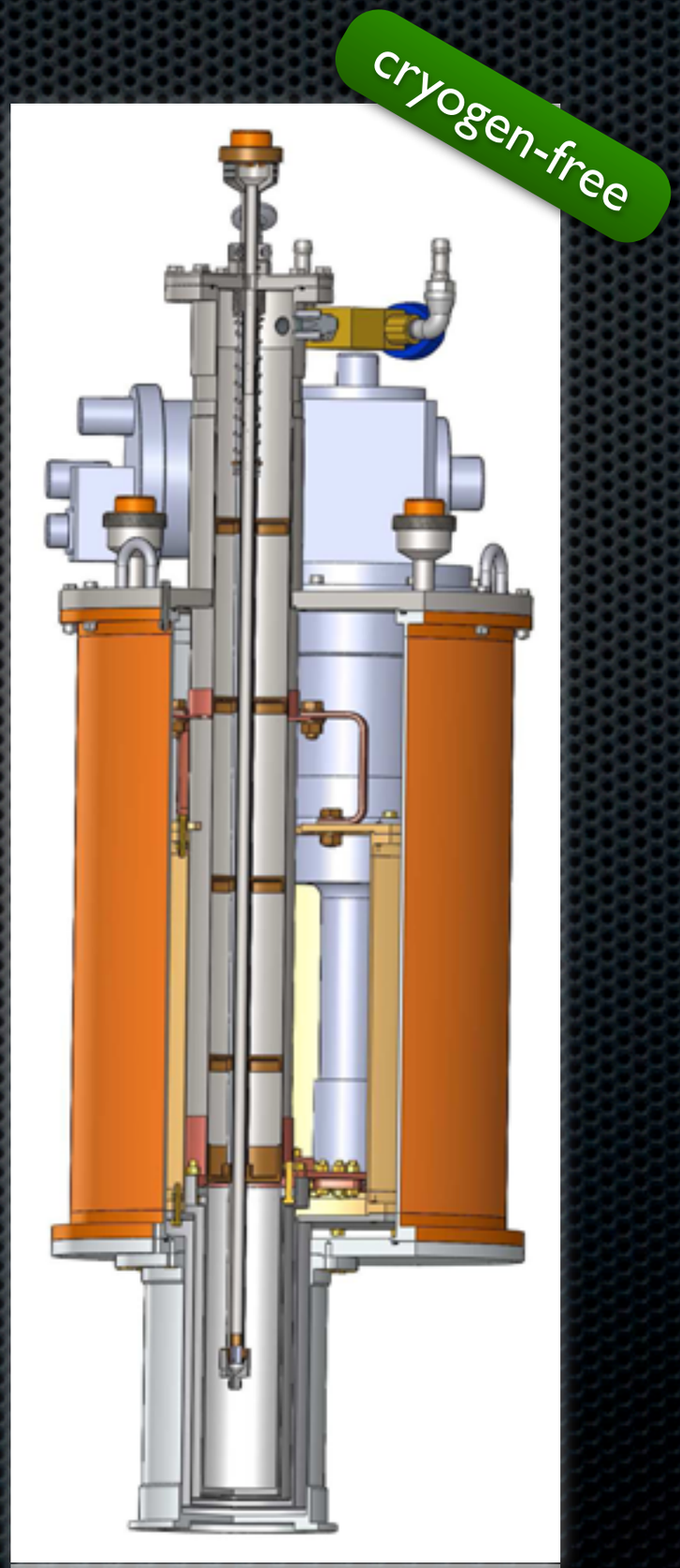

© Institut Laue Langevin

Cryogenics

dry cryostats are easy to use, look fast…

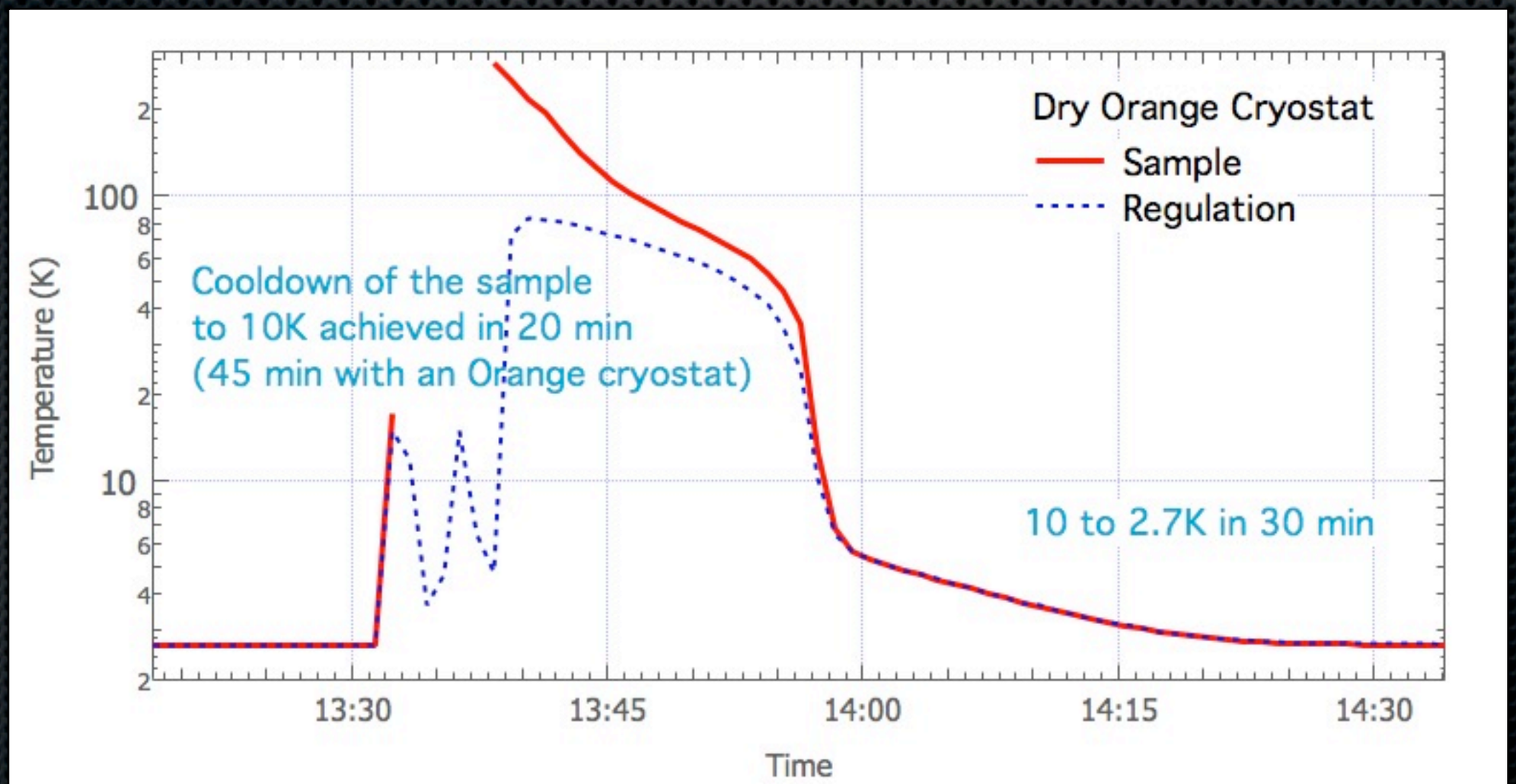

© Institut Laue Langevin

Cryogenics

but cryogen-free cryostats are slow !

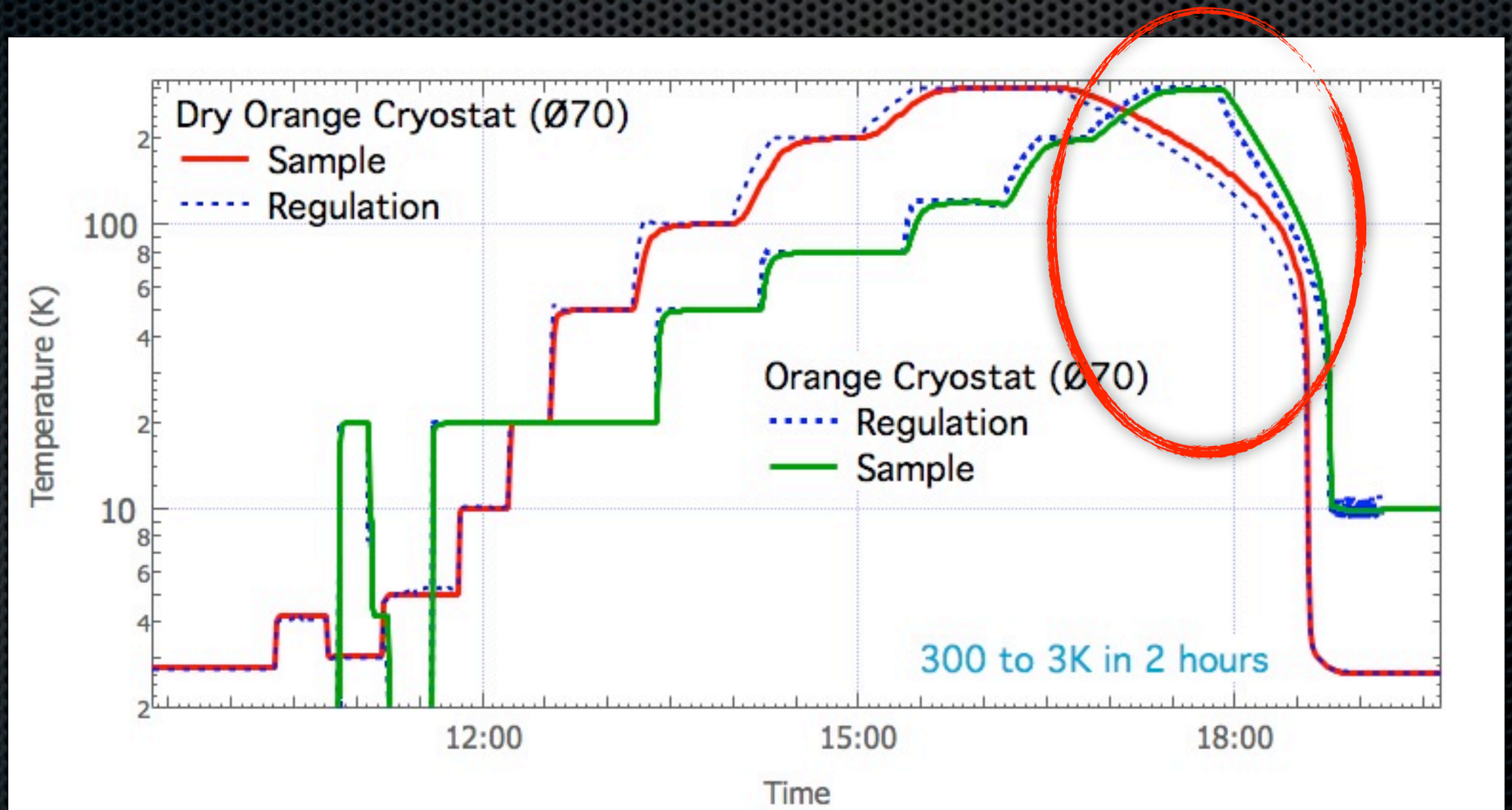

© Institut Laue Langevin

Cryogenics

Much faster cryostats for new-generation instruments ?

x4 **wet cryostats**

x2 with liquid N_2 precool loop fixed to calorimeter

x2-3 with overshooting procedure

x1.5 **dry cryostats**

x1.5 with heat switch ?

What about robotics ? Lack of He ?

© Institut Laue Langevin

Cryogenics

Sample orientation inside cryostats, cryomagnets

- **Cryostat position fixed by focussing optics…**

  ➥ Cold goniometer

  ±8° sample inclination

  ±10 mm along Oz

  ±180° around Oz

  non-magnetic

  remotely controlled

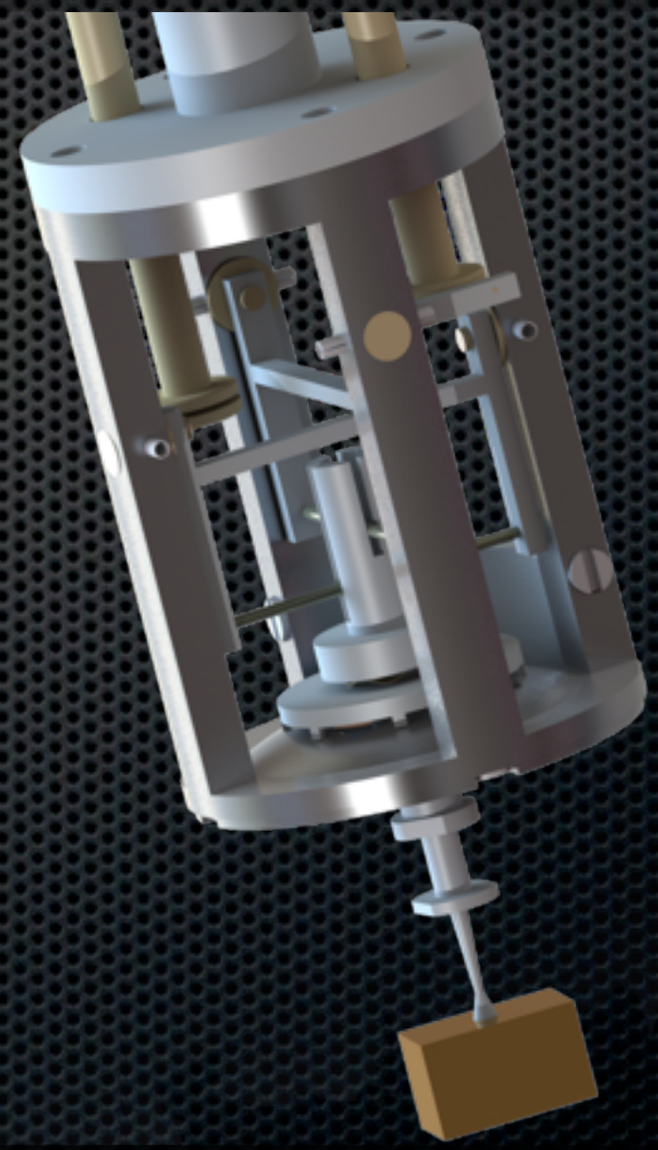

© Institut Laue Langevin

Cryogenics

Sample orientation at a glance

- **Cryostat position fixed by focussing optics…**

  ➥ Cold goniometer

  ±8° sample inclination

  ±10 mm along Oz

  ±180° around Oz

  non-magnetic

  remotely controlled

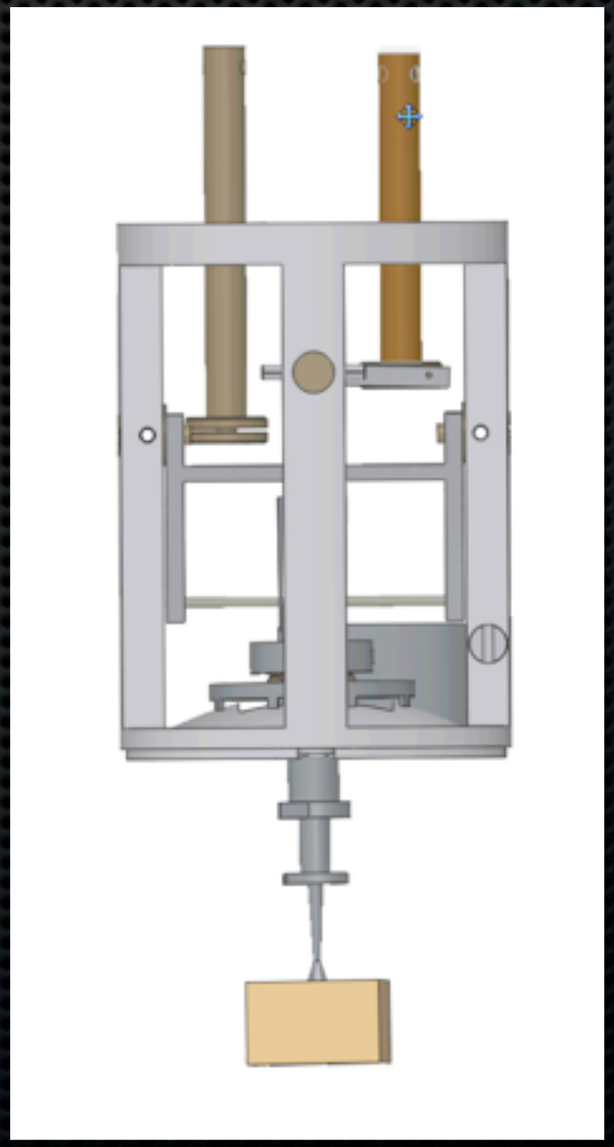

© Institut Laue Langevin

Cryogenics

- **^{3}He fridges (Ø400 mm)**

  350 mK to 320 K
- **Dilution fridges/inserts**

  15 / 35 mK to 320 K
- **Compact dilution fridge**

  150 mK to 320 K
- **Large dilution fridges**

  for high-pressure cells, complex environment…

© Institut Laue Langevin

Cryogenics

- **^{3}He fridges (Ø400 mm)**

  350 mK to 320 K

- **Dilution fridges/inserts**

  15 / 35 mK to 320 K

- **Compact dilution fridge**

  150 mK to 320 K

- **Large dilution fridges**

  for high-pressure cells, complex environment…

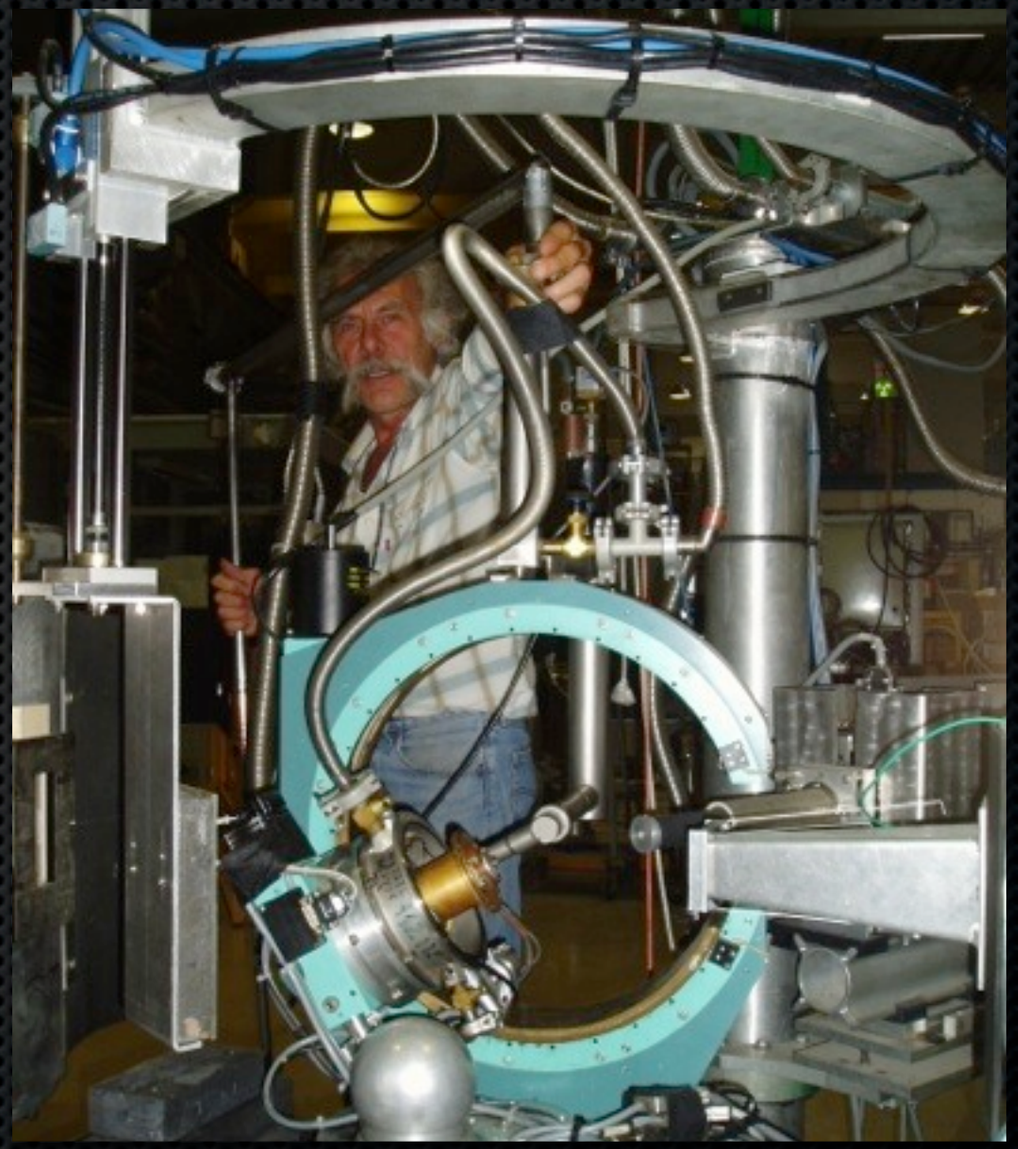

© Institut Laue Langevin

Cryogenics

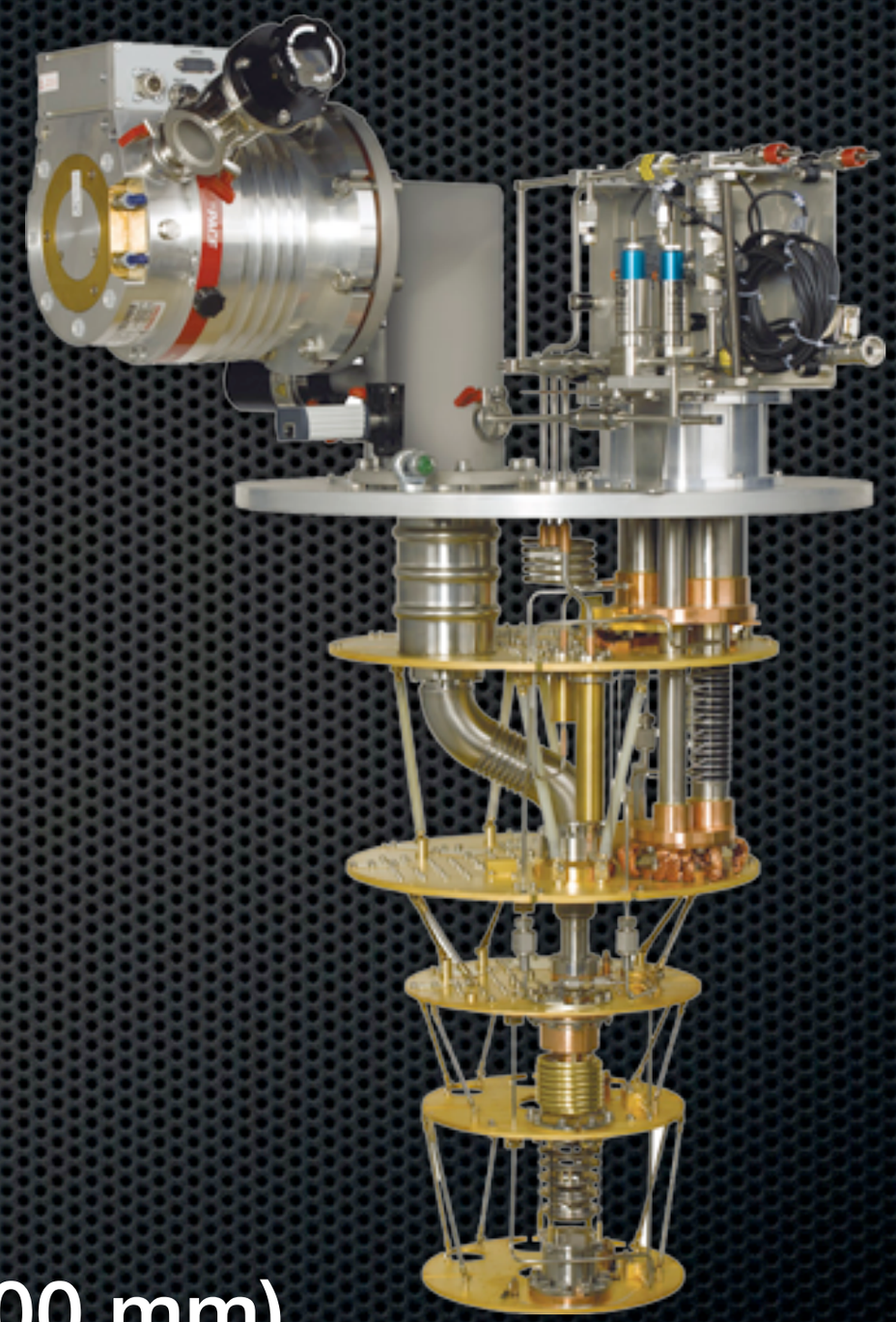

- **^{3}He fridges (Ø400 mm)**

  350 mK to 320 K

- **Dilution fridges/inserts**

  15 / 35 mK to 320 K

- **Compact dilution fridge**

  150 mK to 320 K

- **Large dilution fridges (>Ø800 mm)**

  for high-pressure cells, complex environment…

© Institut Laue Langevin

Soft matter

Unified control

Polarised neutrons

Gas sorption

High temp.

High fields

Low temp.

High pressure

© Institut Laue Langevin

High mag. fields

- **ZBO cryomagnets (Ø800 mm)**

  15T vertical, 17T horizontal

  symmetric or asymmetric ?

  self-shielded or not ?

  2T Dy booster + focusing ?

- **Pulsed field magnets**

  5-10 s/day data acq. at 40 T

  1.000L liquid N_2/day (x10 soon)

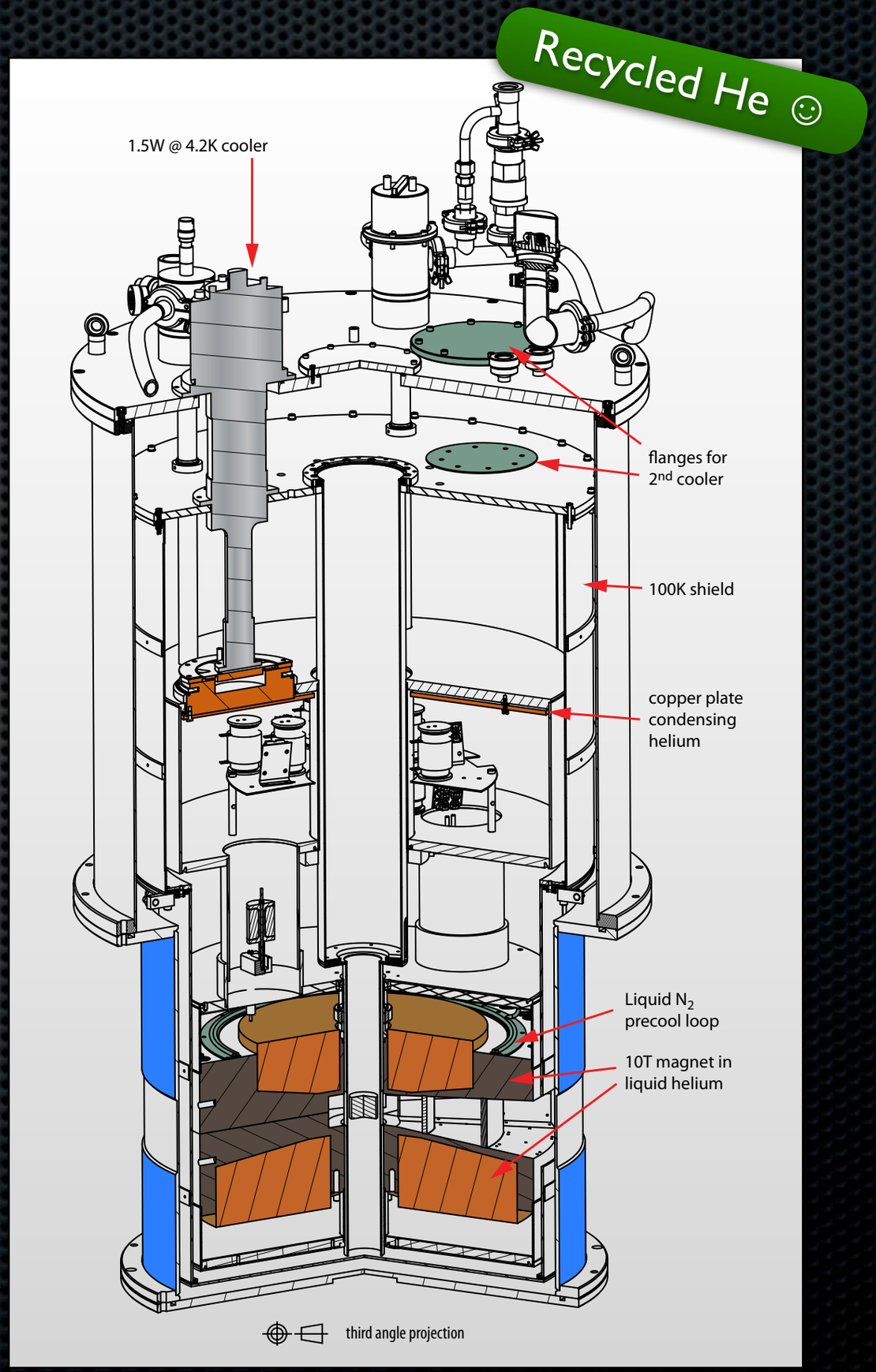

© Institut Laue Langevin

High mag. fields

- **ZBO cryomagnets (Ø800 mm)**

  15T vertical, 17T horizontal

  symmetric or asymmetric ?

  self-shielded or not ?

  2T Dy booster + focusing ?

- **Pulsed field magnets**

  5-10 s/day data acq. at 40 T

  1.000L liquid N_2/day (x10 soon)

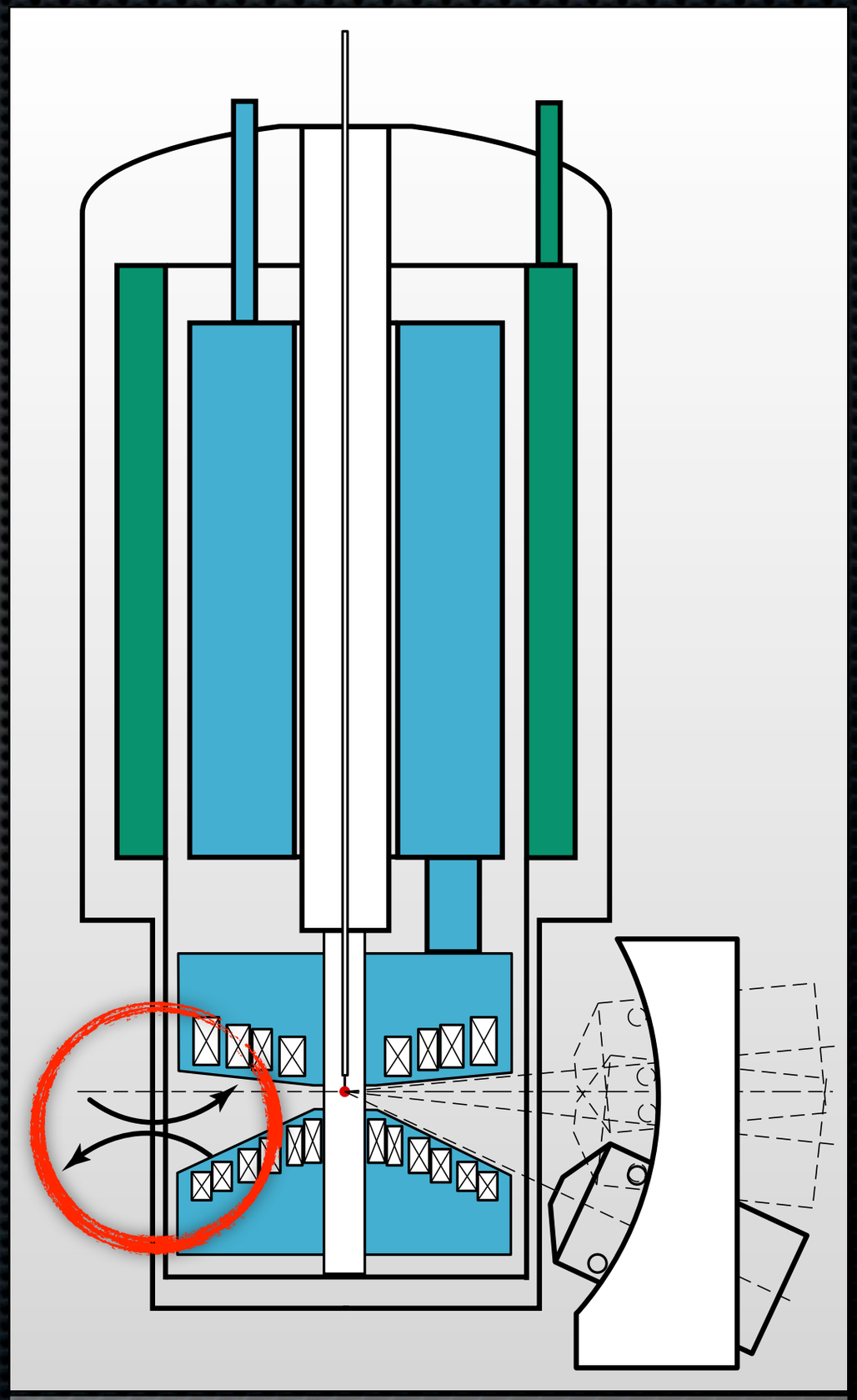

© Institut Laue Langevin

10T non-shielded magnet

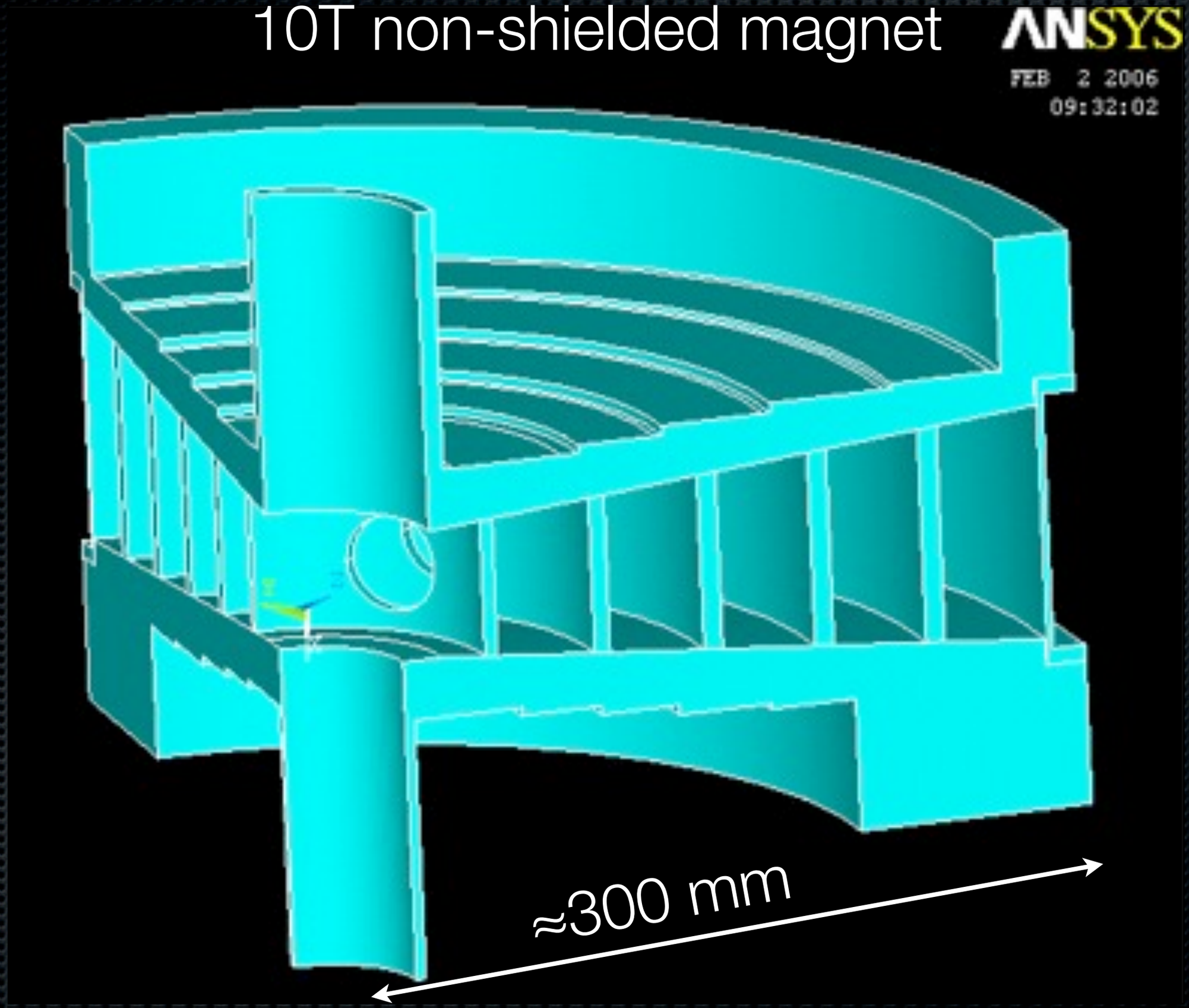

© Institut Laue Langevin

10T actively shielded magnet

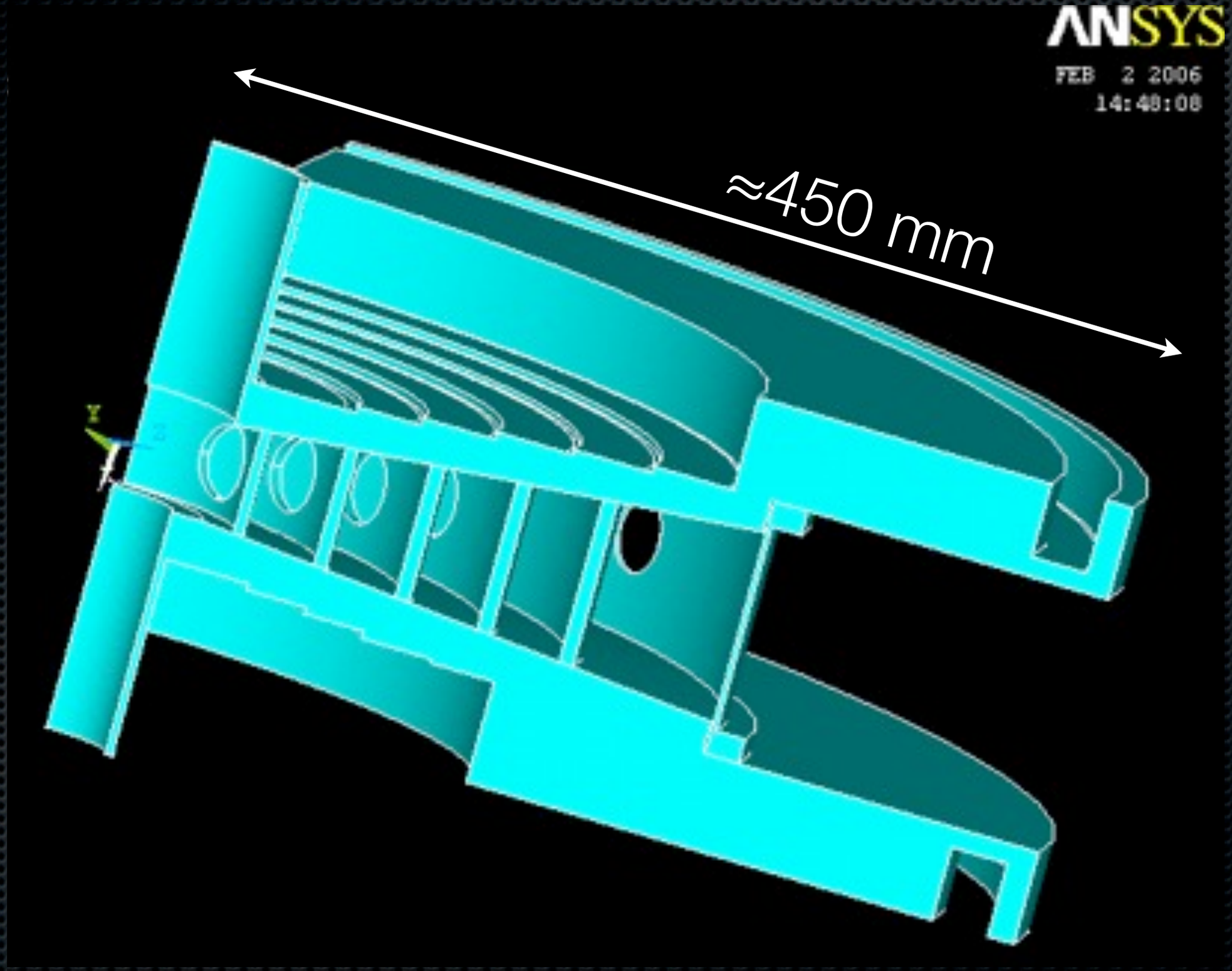

© Institut Laue Langevin

High mag. fields

- **ZBO cryomagnets (Ø800 mm)**

  15T vertical, 17T horizontal

  symmetric or asymmetric ?

  self-shielded or not ?

  2T Dy booster + focusing ?

- **Pulsed field magnets**

  5-10 s/day data acq. at 40 T

  1.000L liquid N_2/day (x10 soon)

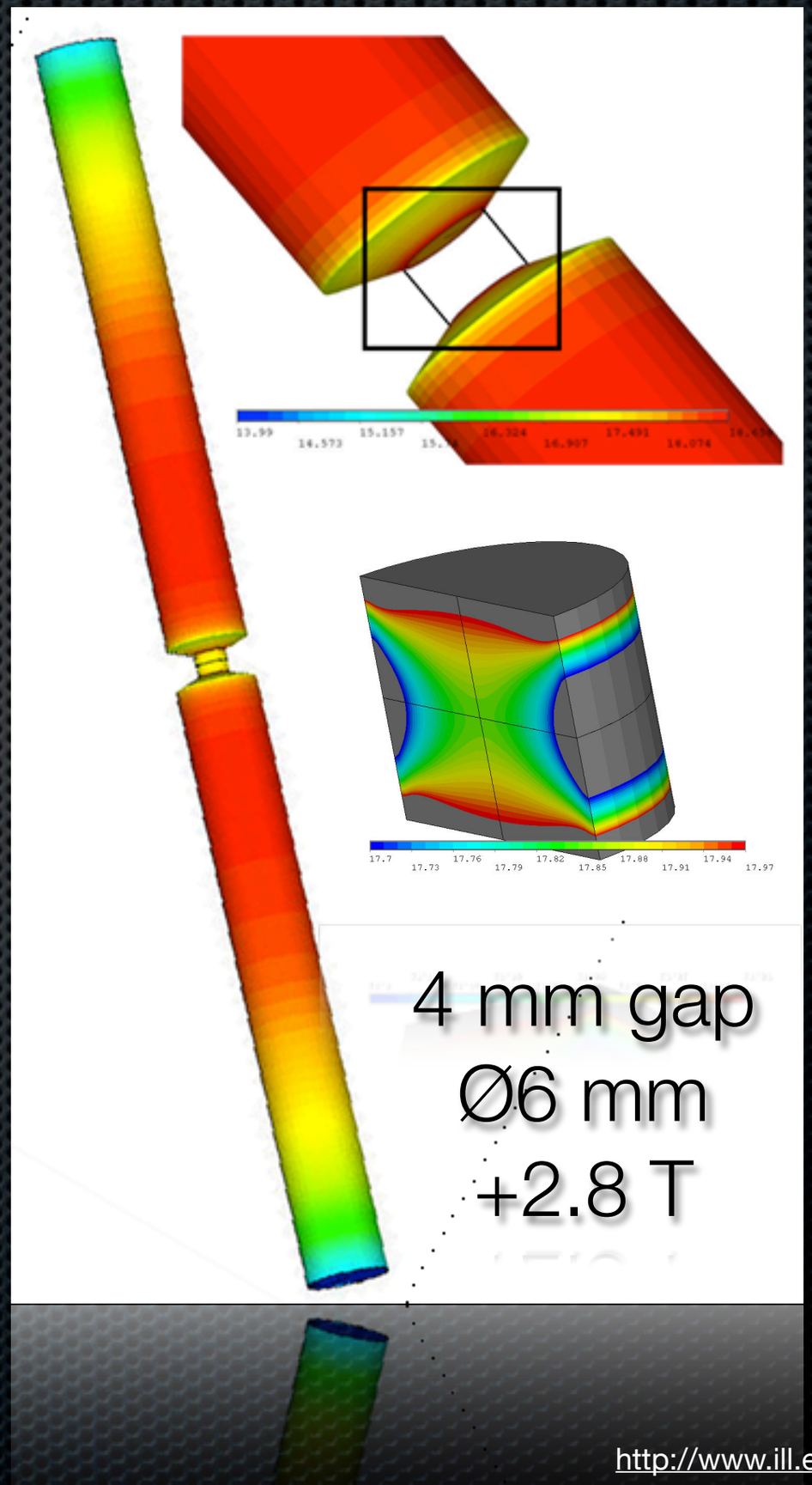

© Institut Laue Langevin

High mag. fields

- **ZBO cryomagnets (Ø800 mm)**

  15T vertical, 17T horizontal

  symmetric or asymmetric ?

  self-shielded or not ?

  2T Dy booster + focusing ?

- **Pulsed field magnets**

  5-10 s/day data acq. at 40 T

  1.000L liquid N_2/day (x10 soon)

© Institut Laue Langevin

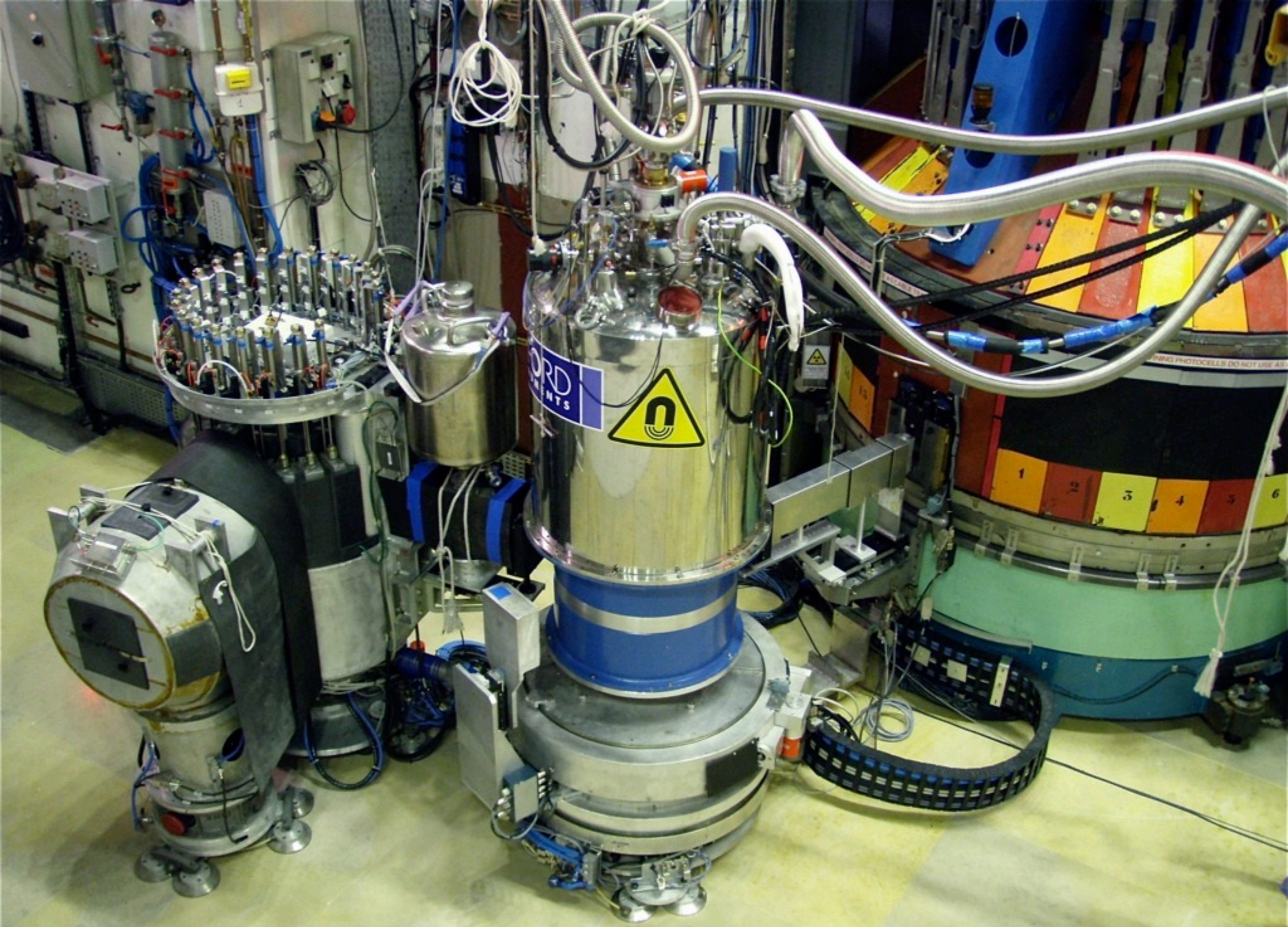

© Institut Laue Langevin

© Institut Laue Langevin

High magnetic fields

wide angle polarisation analysis ?

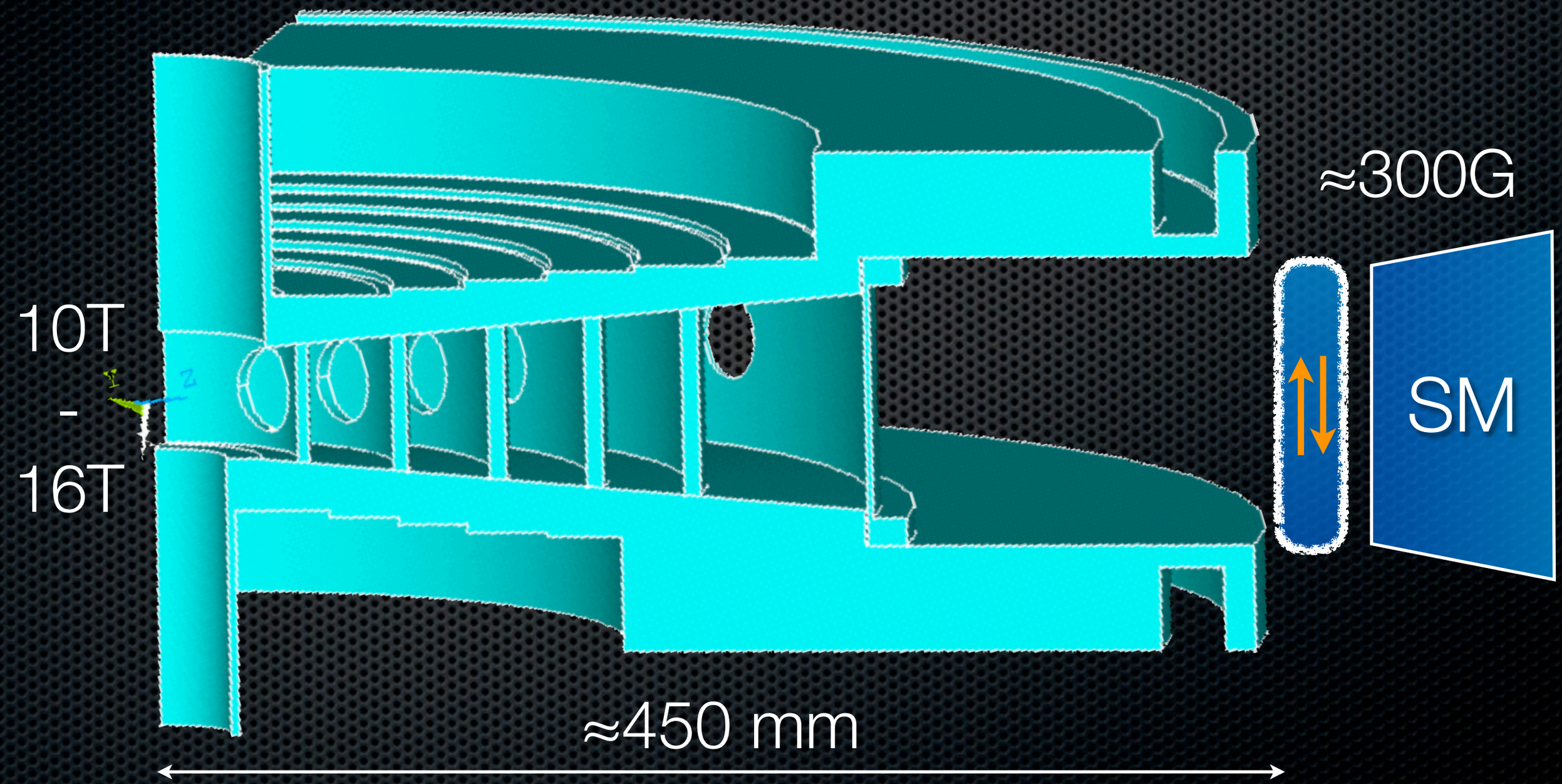

© Institut Laue Langevin

High magnetic fields

wide angle polarisation analysis ?

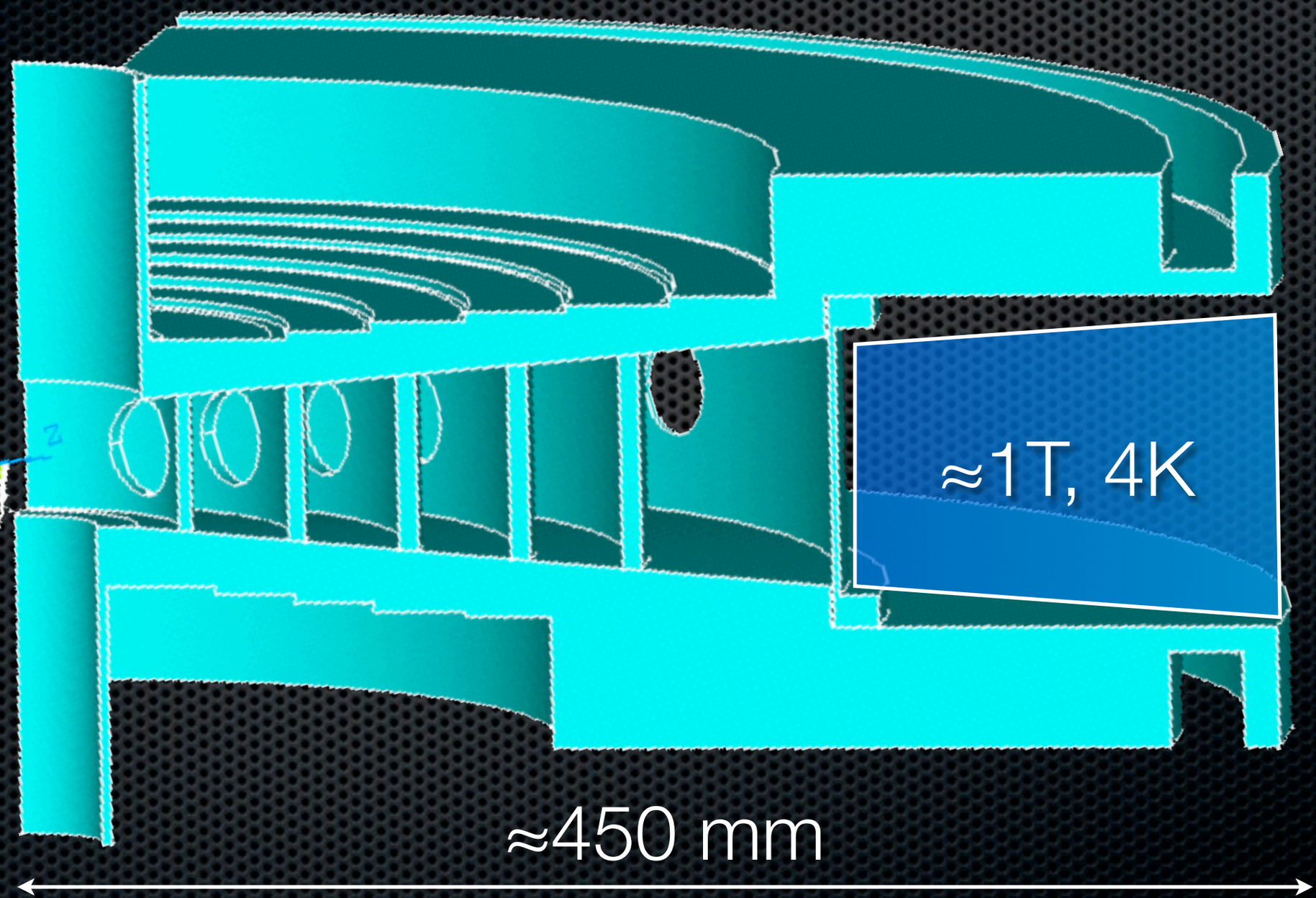

10T
-
16T

SM
inside
but
$\langle ++ \rangle$
$\langle -+ \rangle$
only

© Institut Laue Langevin

High magnetic fields

wide angle polarisation analysis ?

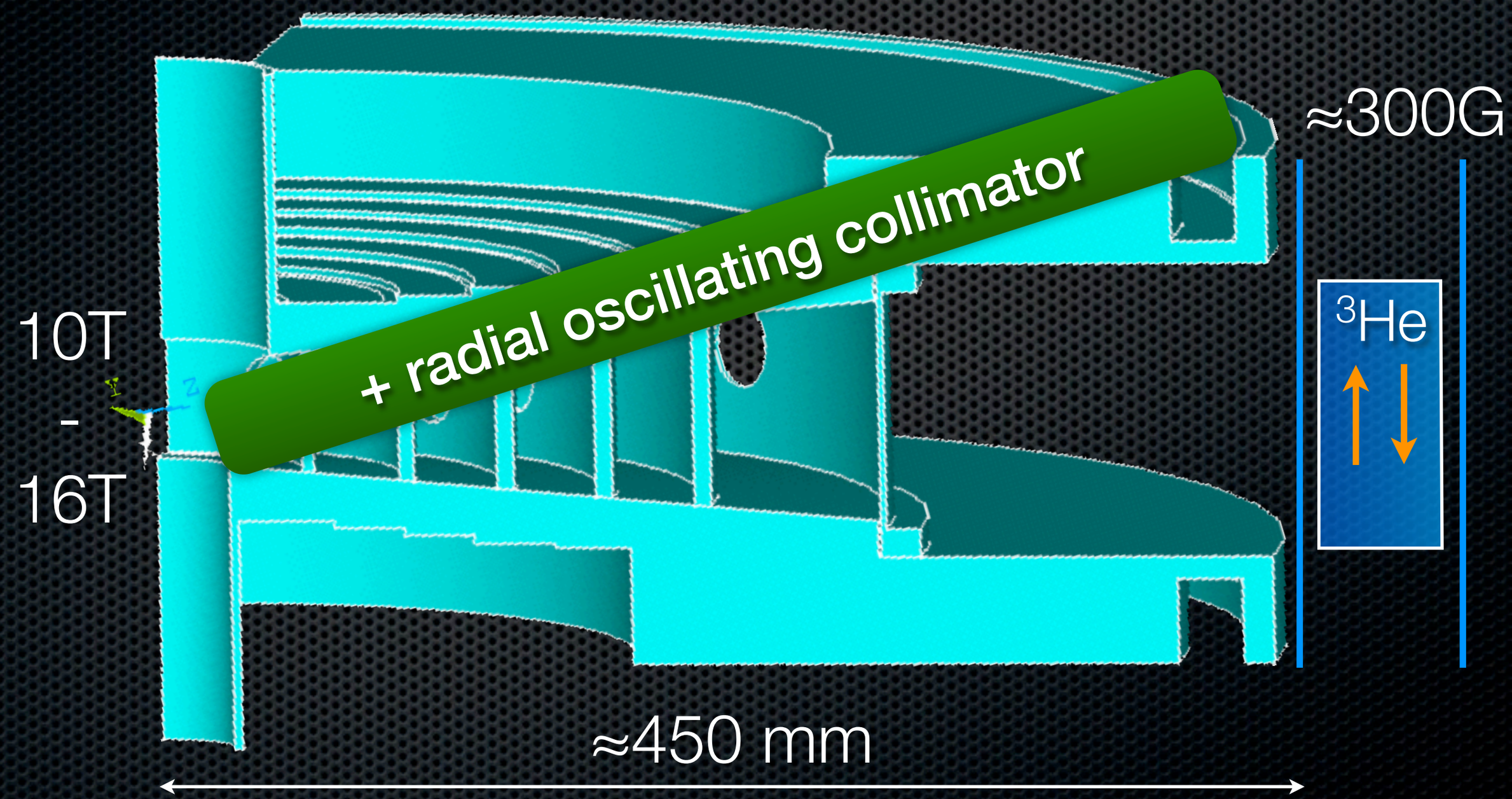

© Institut Laue Langevin

Organisation…

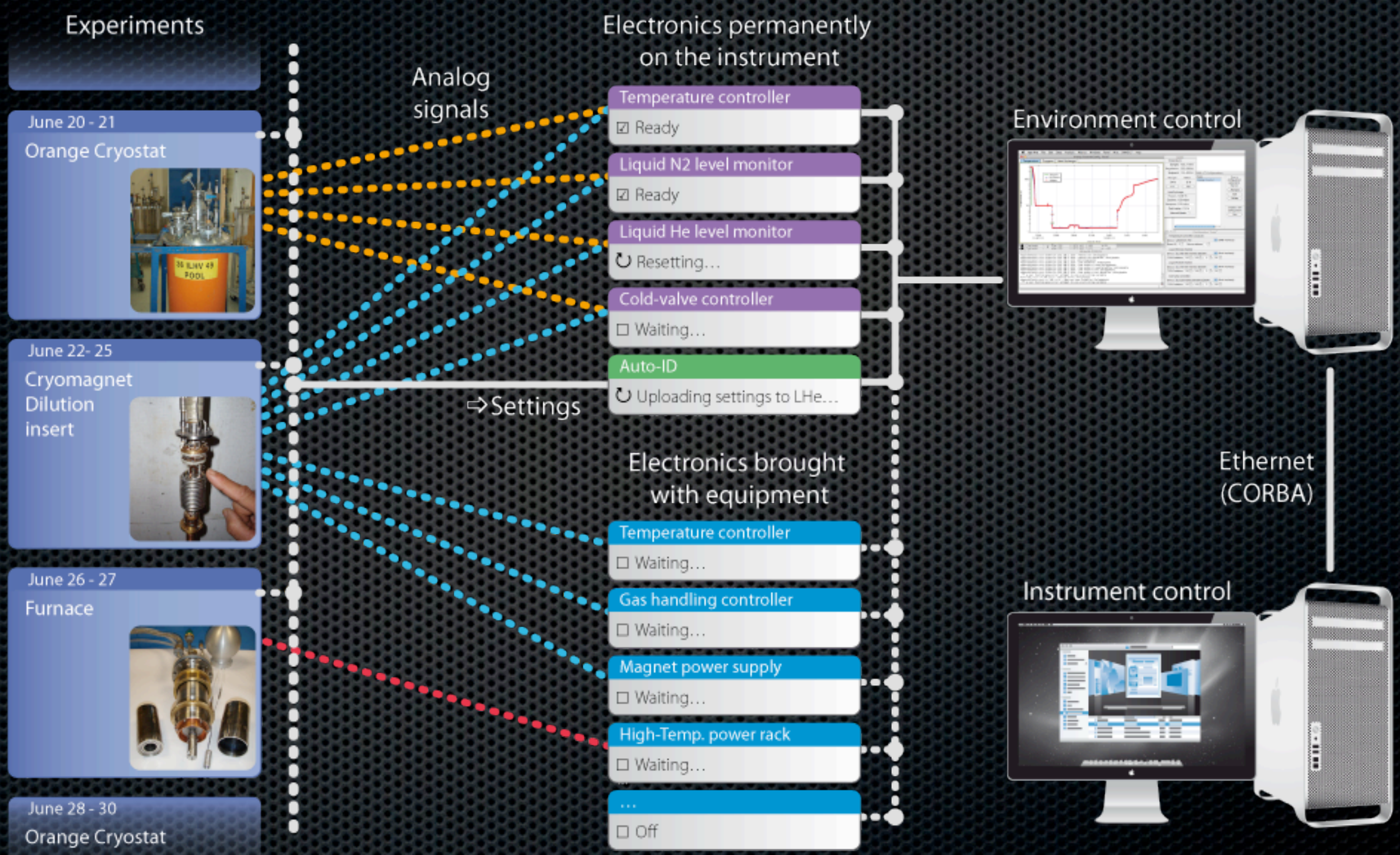

© Institut Laue Langevin

To summarise

- Non magnetic material in > Ø3 m around sample : use Al alloys, Stainless steel 304L or 316L, brass, etc.
- > Ø800 mm sample volume
- > 1000 kg allowable weight on sample table
- > 400 mm between sample table and beam
- > 3 m access above beam (magnets, dilution fridges)
- > 4 m^2 near sample area for installing shared equipment + space for the equipment of the instrument

© Institut Laue Langevin

To summarise

- > 10 kW.h water cooling circuit on each instrument
- > 10 kW on instrument only for sample environment
- > 1.000 kg slow crane with large access (>Ø4 m)
- Background issues can be avoided during the design phase when considering environment from start.
- Services above the sample area: He recovery line, compressed air, power line, liquid nitrogen, Ethernet…
- Standard plugs, electronics, communication protocol…

© Institut Laue Langevin

To summarise

- Never assume that you know which type of environment will be used. The instrument must be science driven, not the reverse !

  ➥ Add focussing optics inside equipment, e.g. pressure cells, cryomagnets, etc. ?

  ➥ Reconsider the use of the cryostats, e.g. robot manipulating samples and compact cryostats ?

  ➥ Design an asymmetric cryomagnet featuring polarisation analysis…?

  ➥ Combine spin filters and environments…?

© Institut Laue Langevin

Many thanks
for your attention

© Institut Laue Langevin