Front End Electronics

i.e. "fighting against noise"

Part 1:

Intrinsic Noise at Amplification Stage

Part 2:

Extrinsic Noise (EMI, Grounding, Shielding etc.)

Adriano Lai
INFN – Sezione di Cagliari

Why we are interested in Noise

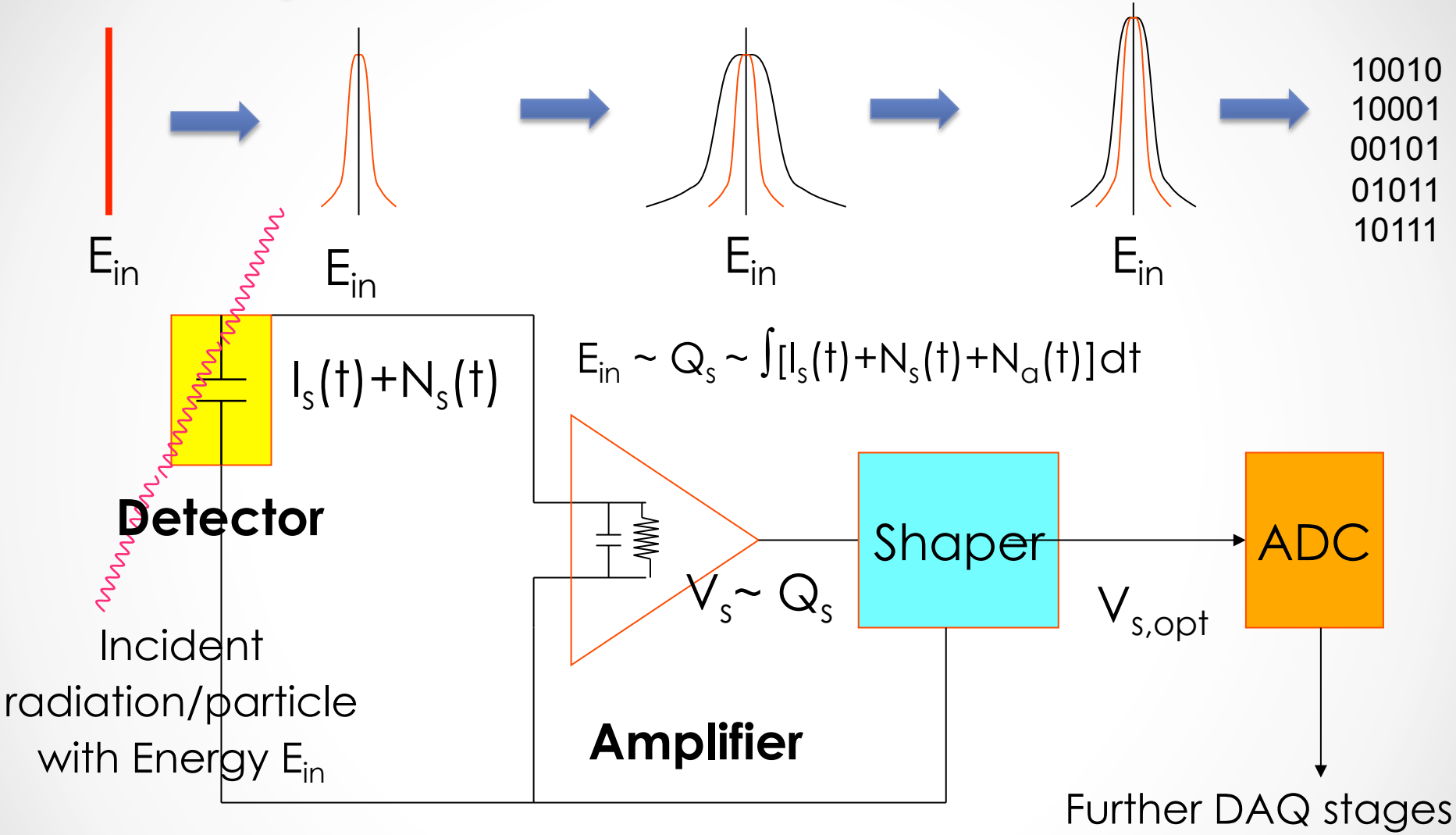

FRONT-END elementary stages

… Energy Resolution

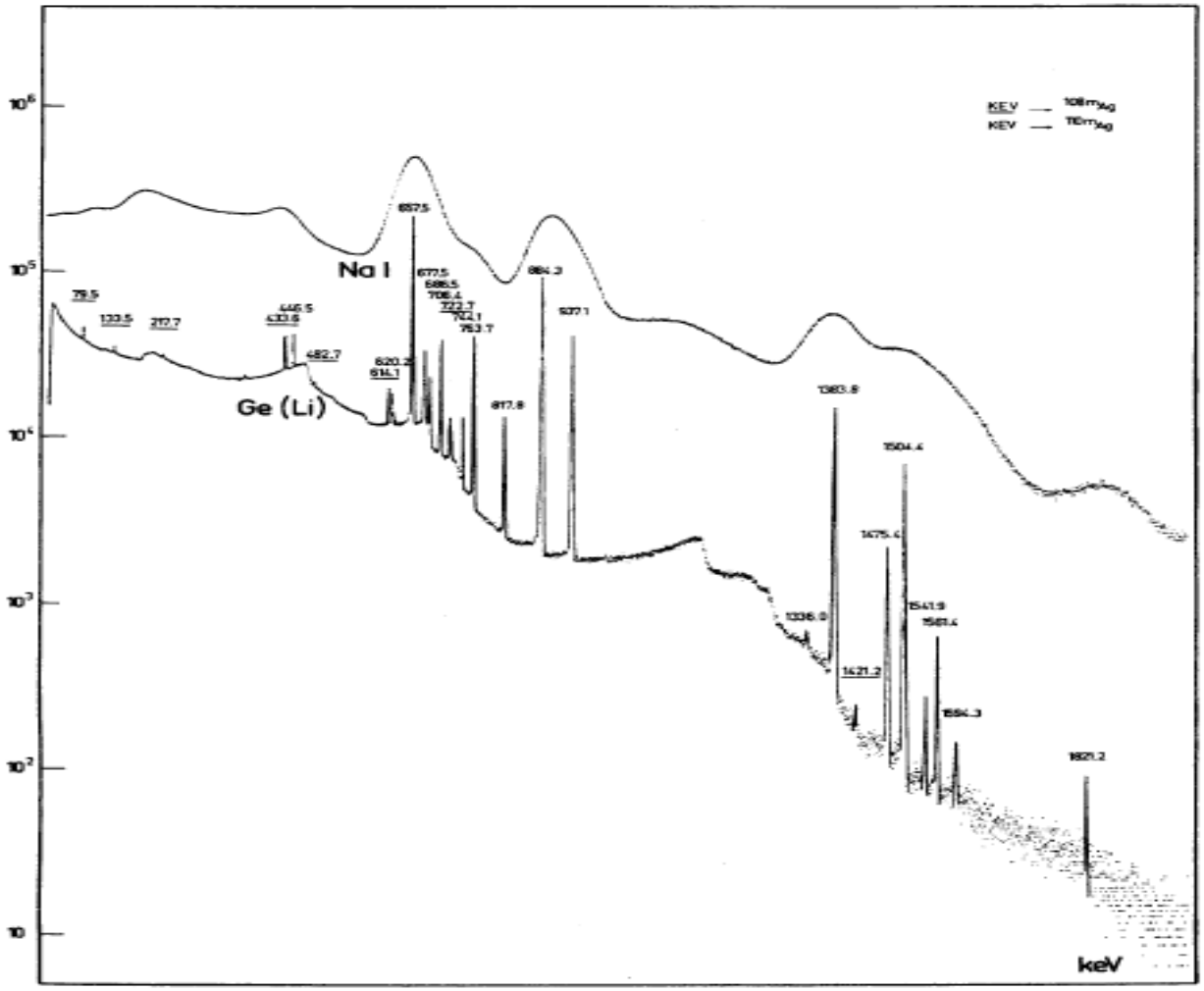

(J.Cl. Philippot, IEEE Trans. Nucl. Sci. **NS-17/3** (1970) 446)

Different Types of Physical Noise*

Intrinsic Noise:

- Mainly statistic.
- Depends on detector and amplification stage.
- Well modeled mathematically.
- Can be minimized but never suppressed (fundamental physical mechanisms).

Extrinsic Noise:

- Mainly systematic.
- Depends on the electrical environment of the readout chain (EM Interference, Power Supplies, Grounding at system level).
- Impossible to model for the complexity and variability of the systems → rules of thumb, practical recipes.
- Can be in principle reduced to a negligible level

**Other kinds of "not physical" noise can affect measurements, e.g. digitization noise*

Intrinsic Noise. Summary

- The Amplification Chain
- Capacitive sources
- Main mechanisms of Intrinsic Noise generation
- Parallel and Serial Noise
- The Shaping Stage: S/N ratio optimization
- Other effects that affect resolution (base-line fluctuations, pile-up, ballistic deficit…) and their remedies

The Signal Processing (analog) Chain

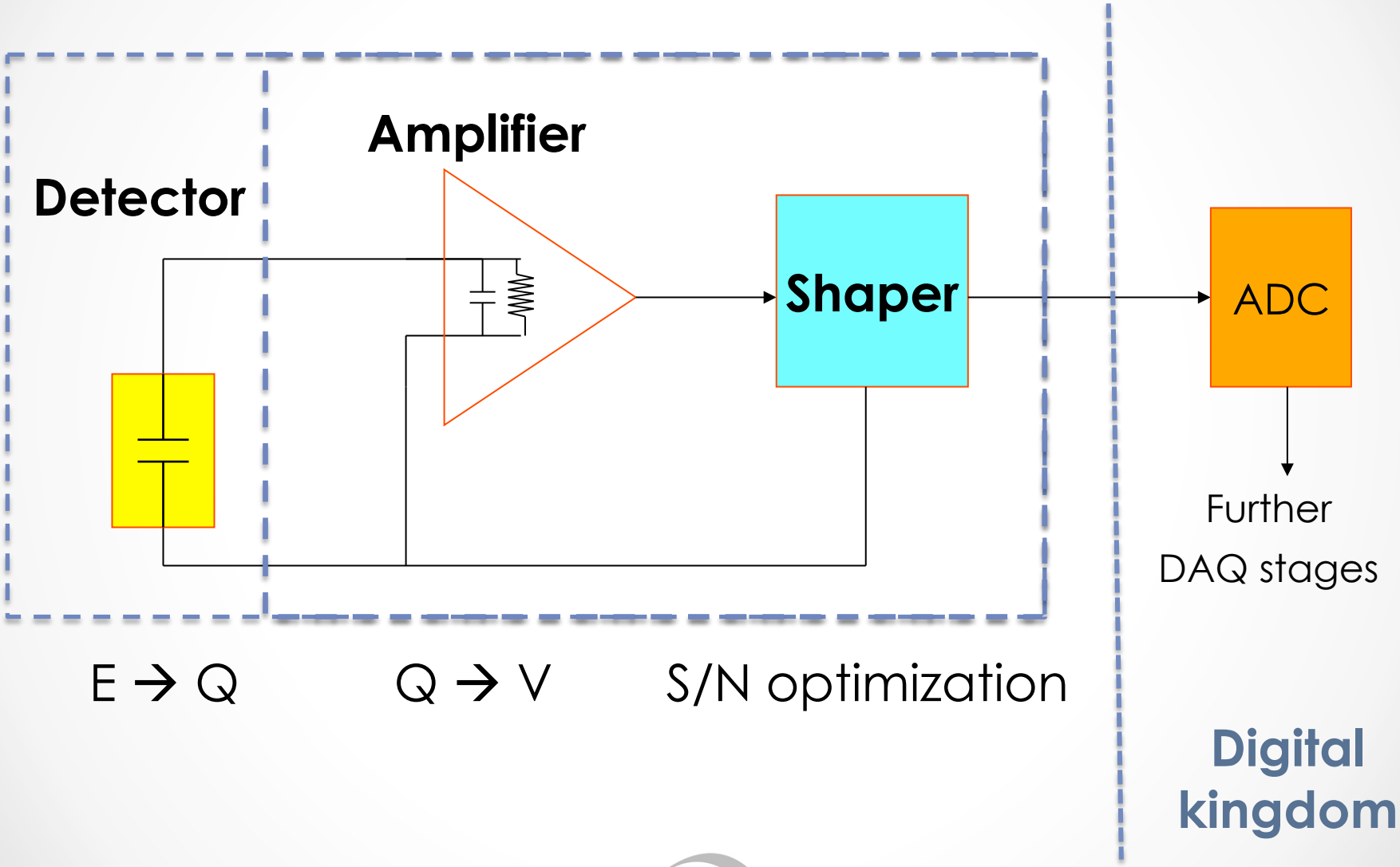

The Detector as a Capacitive Source

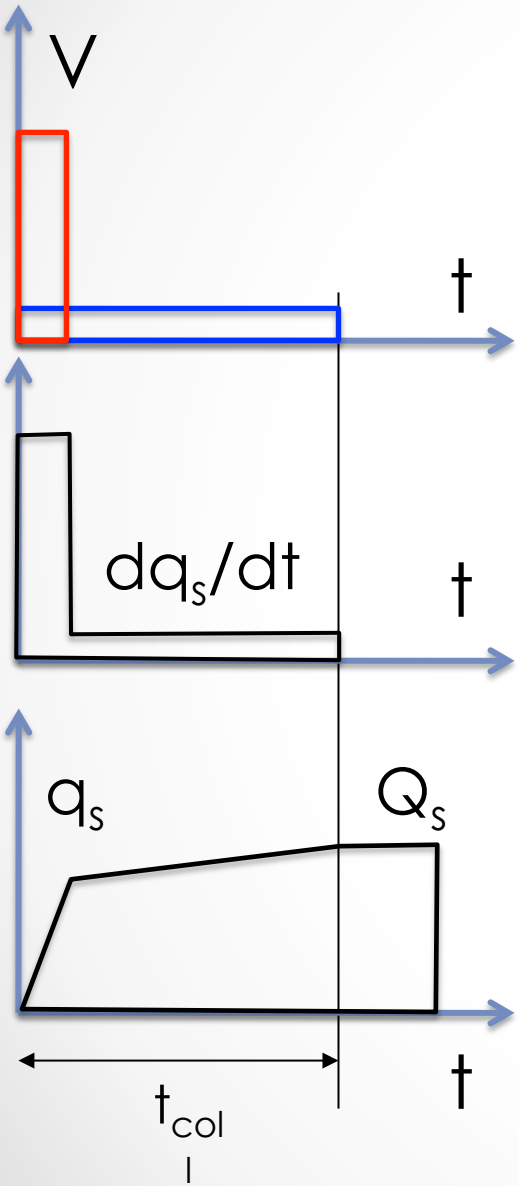

Positive and Negative Carriers

Current I_s on the detector (source) electrodes

Integrated (collected) Charge Q_s

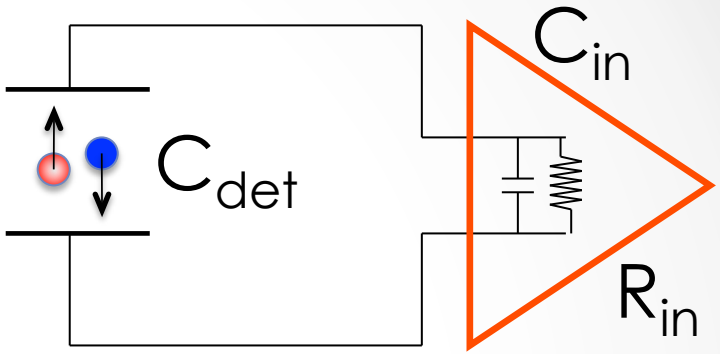

The measured V_s depends on C_{det} !

If $R_{in}(C_{det}+C_{in})$ >> t_{coll}

$$V_s = \frac{Q_s}{C_{det} + C_{in}}$$

What is the Shape of the Signal?

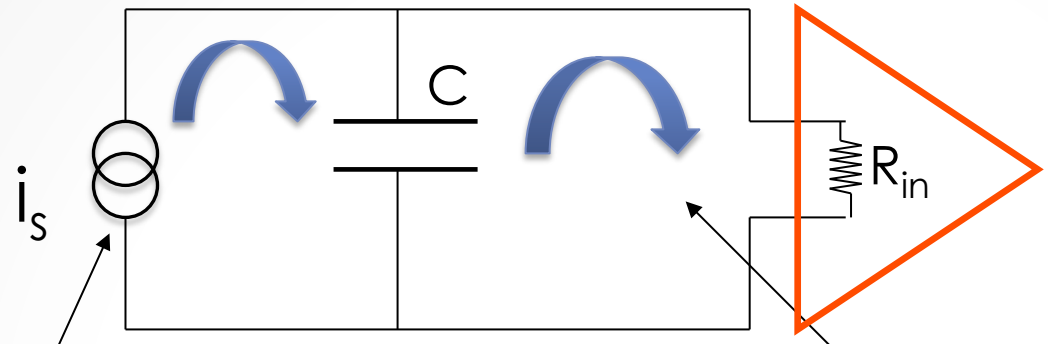

$C = C_{det} + C_{in}$

C discharges inside the amplifier

Current I_s inside the detector is collected as Q_s on C

Suppose a current pulse with this shape:

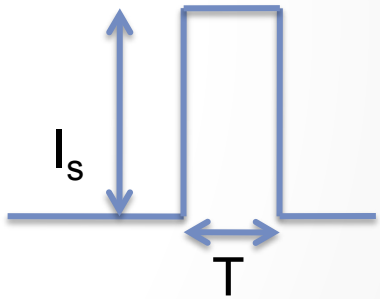

Then:

$$0 \le t < T: \qquad i_{in}(t) = I_s\left(1 - e^{-t/RC}\right)$$

$$T \le t \le \infty: \qquad i_{in}(t) = I_s\left(e^{T/RC} - 1\right) \cdot e^{-t/RC}$$

$R = R_{in}$

$C = C_{tot} = C_{det} + C_{in}$

RC vs time and the output shape

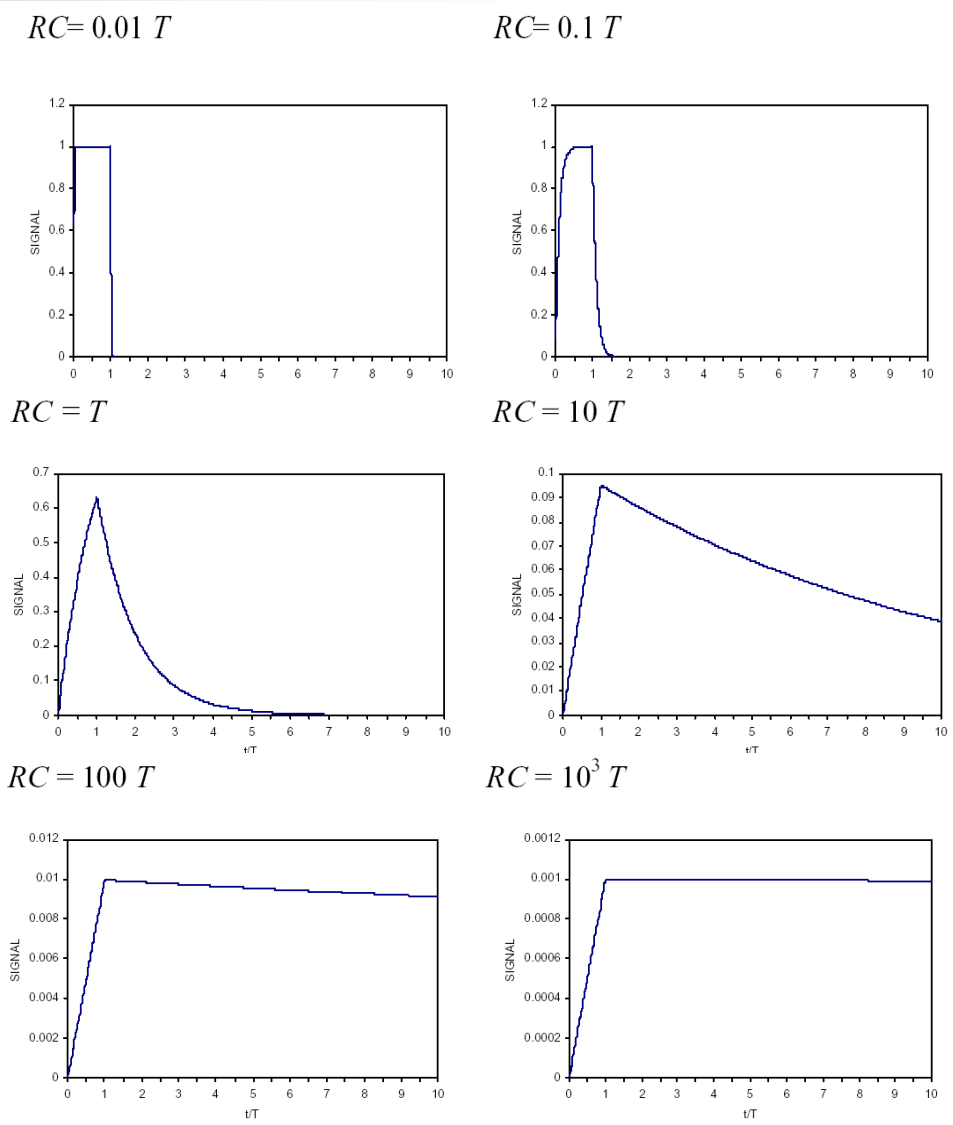

RC << T

The output follows the input

RC increases

The peak lowers, the signal is longer, the integral is constant (I_s x T)

RC >>T

The signal is integrated and the peak is equal to

$$V_o = \frac{Q_s}{C_{\det} + C_{in}} = \frac{1}{C_{tot}} \int I_s dt$$

Feedback: Charge Sensitive Amplifier

If Z_{in} is large enough (and usually it is):

$$v_f = (A+1)\, v_i$$ Voltage across C_f

$$Q_f = C_f\, v_f = C_f\,(A+1)\, v_i$$

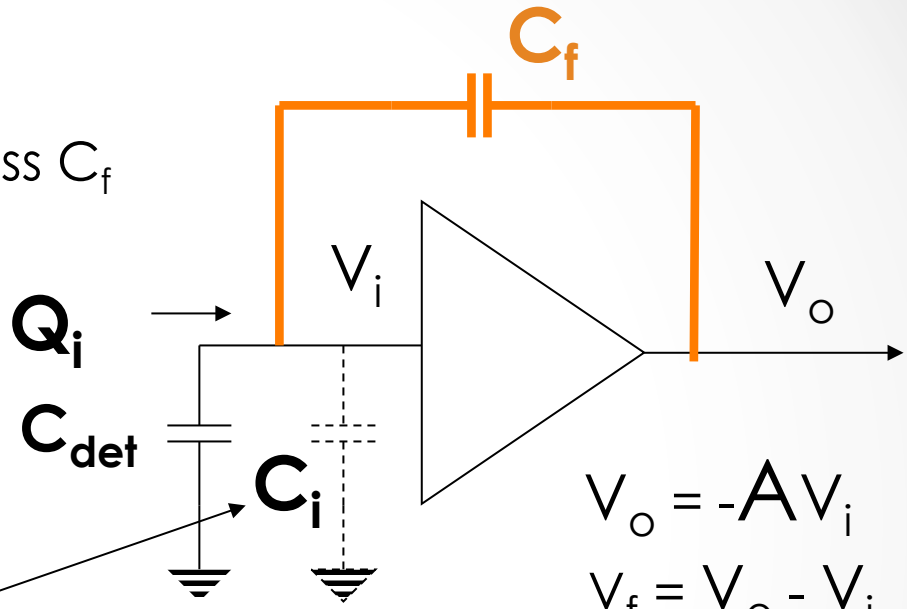

$V_o = -AV_i$

$V_f = V_o - V_i$

Let's define C_i ("equivalent" capacitance at input of amplifier) as

$$C_i = \frac{Q_i}{v_i} = C_f\,(A+1)$$

$Q_f \equiv Q_i$ (if $Z_{in} = \infty$)

Then, the Charge Gain A_Q is given by :

Independent of C_{det}

$$A_Q = \frac{dV_o}{dQ_i} = \frac{A \cdot v_i}{C_i \cdot v_i} = \frac{A}{C_i} = \frac{A}{A+1} \cdot \frac{1}{C_f} \approx \boxed{\frac{1}{C_f}} \quad (A >> 1)$$

CSA: size of C_f

Fraction of collected charge

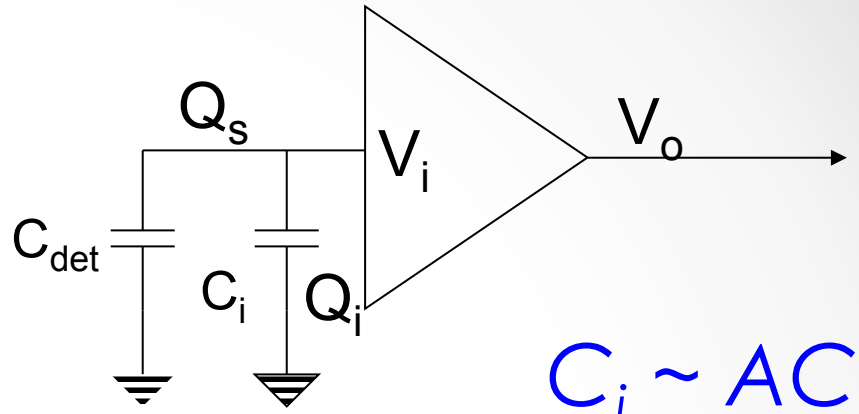

$Q_s = Q_{det} + Q_i$

$C_i \sim AC_f$

$$\frac{Q_i}{Q_s} = \frac{C_i v_i}{Q_{det} + Q_i} = \frac{C_i}{Q_s}\frac{Q_s v_i}{Q_{det} + Q_i} = \frac{C_i}{Q_s}\frac{Q_s}{C_{det} + C_i} \approx \frac{1}{1 + \frac{C_{det}}{C_i}} \approx 1 \quad ?$$

Take

$A = 10^3$, $C_f = 1$ pF

$\rightarrow C_i = 1$ nF

$C_{det} = 10$ pF $\rightarrow Q_i/Q_s = 0.99$

$C_{det} = 1$ nF $\rightarrow Q_i/Q_s = 0.5$

CSA typical configuration

A (large) feedback resistor R_f is usually used to discharge C_f

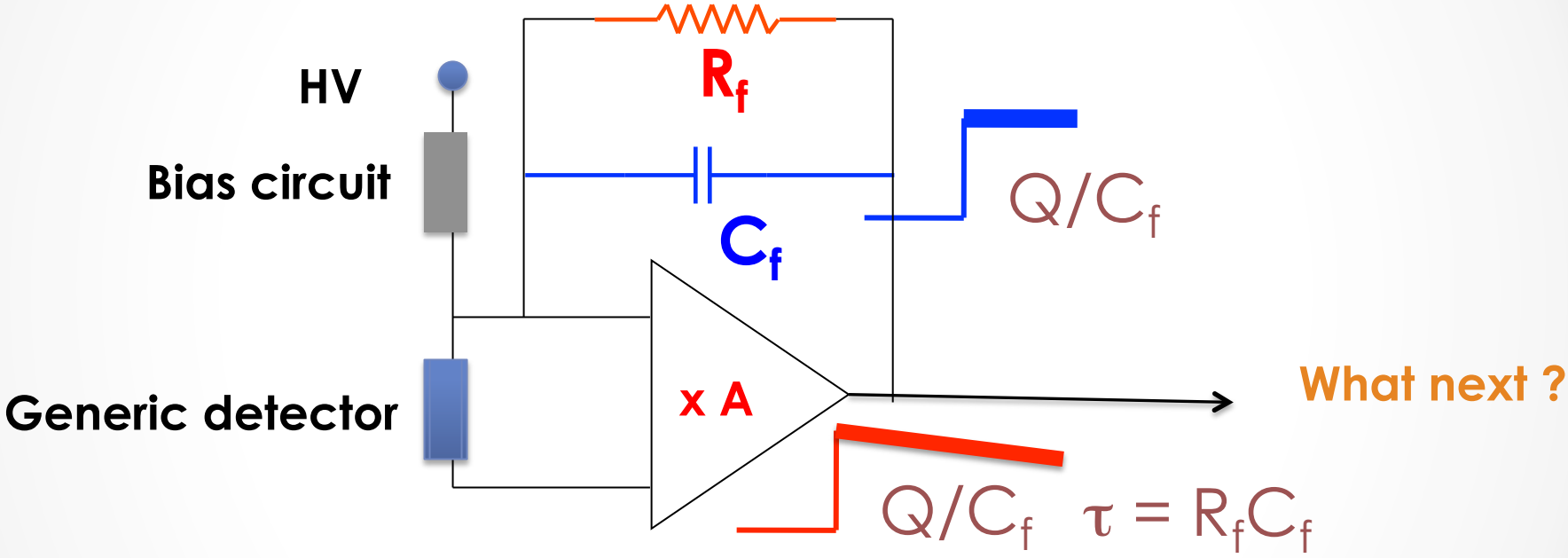

Besides signal, also noise is amplified !

→ S/N optimization

Amplification and Noise

Different kinds of (intrinsic) noise mechanisms. They are related to the physics of conduction and operate inside and outside the amplifier:

Thermal (Johnson-Nyquist) Noise

Due to the chaotic motion of charges in a Resistor, a variable voltage (or current) can be measured across it, having average = 0, but variance **$\sigma^2 = \langle v^2 \rangle = 4k_BTR \times \Delta f$ (voltage)** or **$\sigma^2 = \langle i^2 \rangle = 4k_BT/R \times \Delta f$ (current).** Δf is the bandwidth of the signal. This is white noise (flat spectrum).

Shot Noise

Due to the quantization of charge, the time of arrival of carriers crossing a potential barrier (e.g. leakage current in a photodiode) fluctuates, giving a noise current with variance **$\sigma^2 = \langle i^2 \rangle = 2eI \times \Delta f$**, where I is the average current. This is also white noise.

1/f Noise

This can depend on different effects. In semiconductors is related to surface effects (trapping of carriers) and is proportional to the area of the device. Its expression is **$\sigma^2 = \langle v^2 \rangle = A_f/f$**, where A_f is a constant strongly depending on device/material.

Units of Noise: the ENC

Equivalent Noise Charge

= R.M.S. noise expressed in number of electrons (or fC – pC).

It is the noise to be applied at the input of the amplification chain in order to obtain the measured R.M.S. at the output. In other words:

ENC = Input charge for which S/N = 1

When the spectrum is enlarged only by noise:

$$\sigma_V = 2.36 \times V_{FWHM}$$

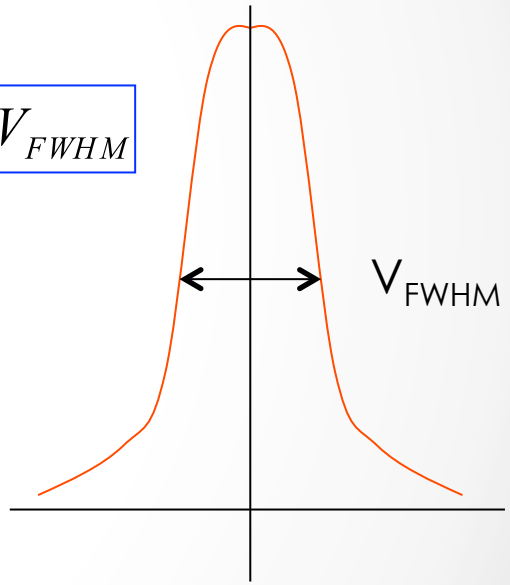

If Q is the charge produced by a particle having an energy E, corresponfing to a signal of voltage V, then:

$$\frac{ENC}{Q} = \frac{\sigma_V}{V} = \frac{E_{FWHM}}{2.36 \times E}$$

E/Q depends on the specific detector

(3.6 eV/e- in Si, 2.9 eV/e- in Ge)

In HEP this is the main unit to express noise (otherwise V/√f)

Noise representation

In a circuit, noise is usually represented in the following way:

- It is a current or voltage source, having size represented by its corresponding variance (noise power) or RMS.
- It is always placed outside of the amplifier, which is ideally considered noiseless.
- The noise sources are often divided in two categories:
  - current noise or parallel noise
  - voltage noise or serial noise

“Parallel” and “Serial” noise

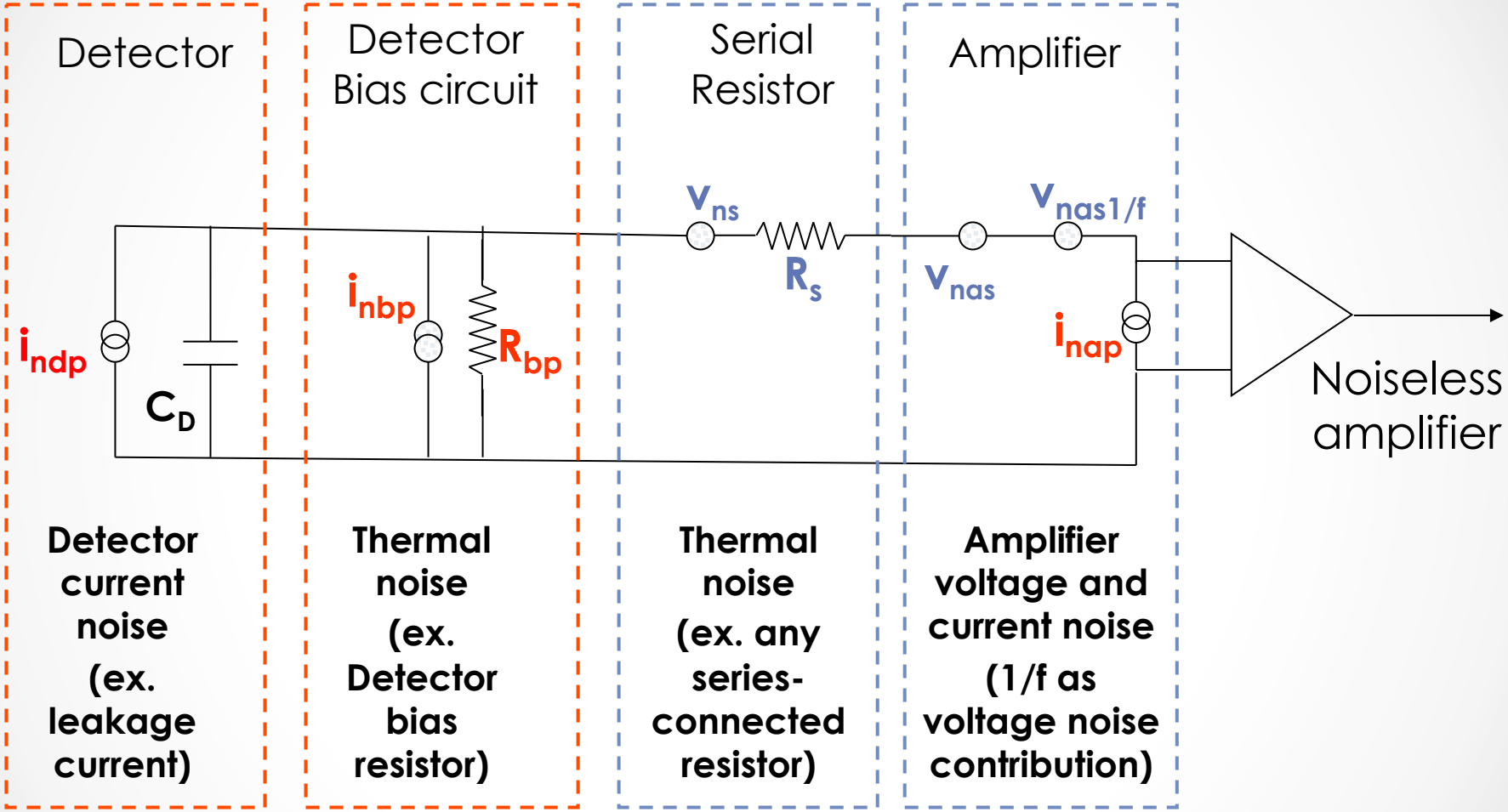

This is a typical example. Real contributions have to be specifically evaluated

"Parallel" and "Serial" noise

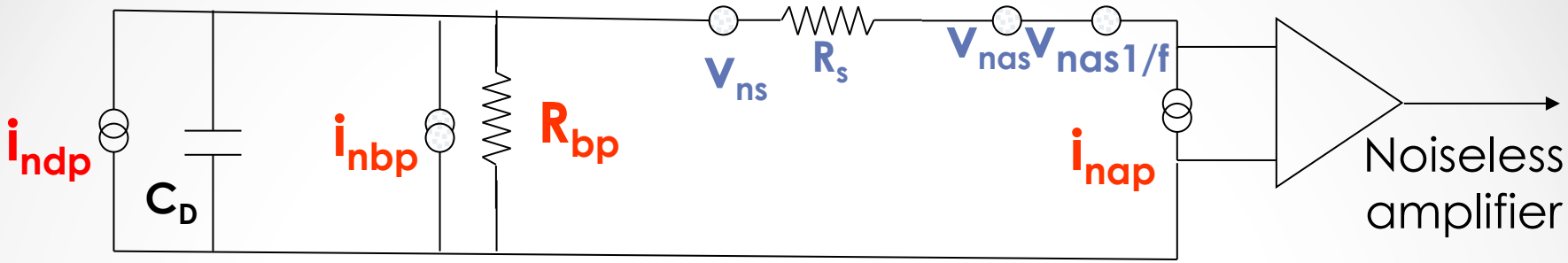

$$ENC_{tot}^2 = N_p T_m + N_s C_D^2 \frac{1}{T_m} + N_f C_D^2$$

T_m = time of measurement

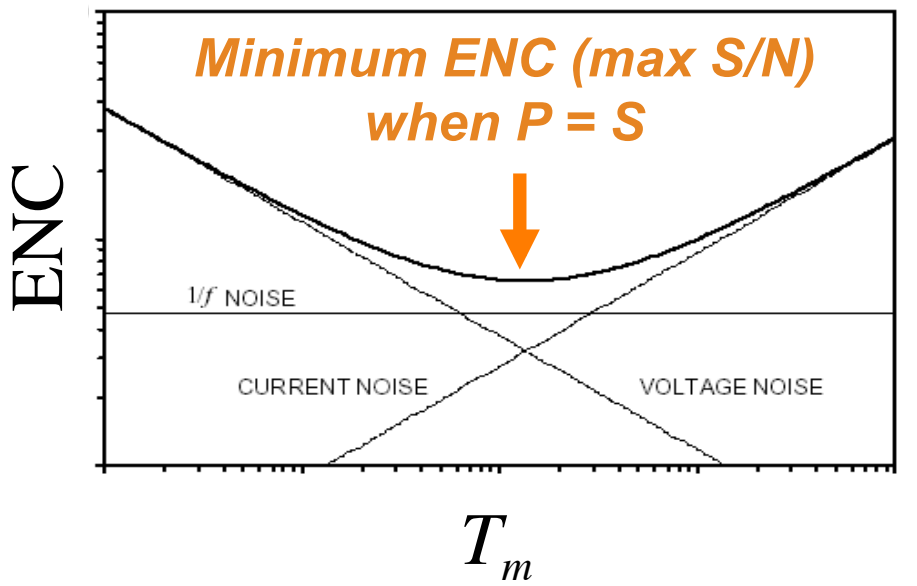

$$ENC_{tot}^2 = \frac{e^2}{8}\left[\left(2qI_D + \frac{4kT}{R_p} + i_{na}^2\right)\tau + \left(4kTR_s + e_{na}^2\right)\frac{C_D^2}{\tau} + 4A_f C_D^2\right]$$

T_m = shaper peaking time = τ

Noise and its "remedy": Shaping

Example:

Signal with A = 1 mV, sinusoidal, with f = 1 kHz . White noise σ = 1 μV/√Hz

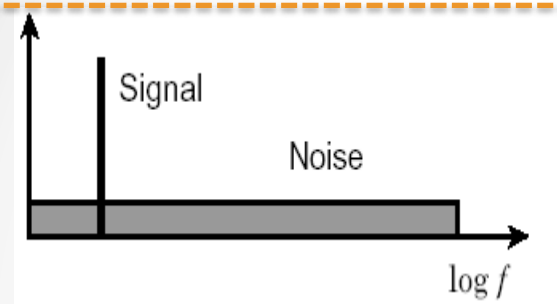

1st case: Amplifier bandwidth Δf = 1 MHz

Noise = 1μV x $\sqrt{\Delta f}$ = 1.3 mV

S/N = 0.8

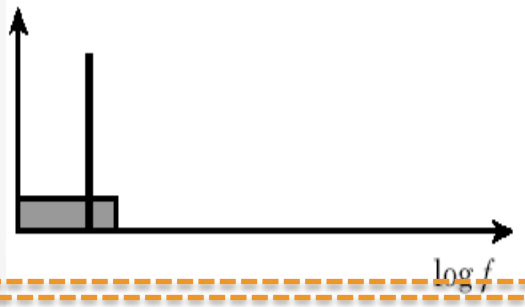

2nd case: Low pass filter → Δf = 2 kHz

Noise = 1μV x $\sqrt{\Delta f}$ = 56 mV

S/N = 18

3rd case: Band pass filter → Δf = 100 Hz

Noise = 1μV x $\sqrt{\Delta f}$ = 10 mV

S/N = 100

Shaping, alias Signal Processing

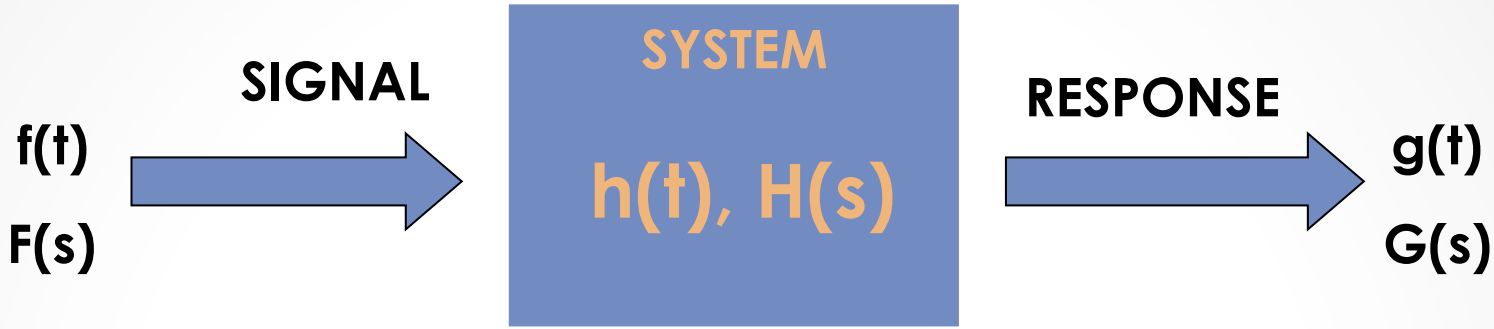

convolution

Time domain

Transform

Frequency domain

$$f(t) \xrightarrow{SYSTEM} \boxed{\int f(t)h(t-\tau)d\tau} = f(t) \otimes h(t) = g(t)$$

$$f(t) \xrightarrow{T} F(s) \xrightarrow{SYSTEM} \boxed{F(s)H(s)} \rightarrow G(s) \xrightarrow{antiT} g(t)$$

It is simpler to work in the frequency domain (Laplace transforms)

$$H(s) = \frac{G(s)}{F(s)} = \frac{OUT(s)}{IN(s)}$$

The TRANSFER FUNCTION

h(t) and H(s) = L^{-1}[h(t)] are called TRANSFER FUNCTIONS of the system in the time and frequency domain respectively

- They have a deep meaning in the theory of linear differential equations (h(t) corresponds to the kernel function , which is calculated from the Wronksian determinant of the equation)
- They characterize completely the behaviour of the system and therefore its action on an input signal. Given the TF, we can determine the response to any given input to the system.
- It can be easily seen that h(t) is nothing else that the system response to a pulse signal δ(t):

$$\delta(t) \otimes h(t) = \int \delta(t) h(t-\tau) d\tau = h(t)$$

Impulse Response Function

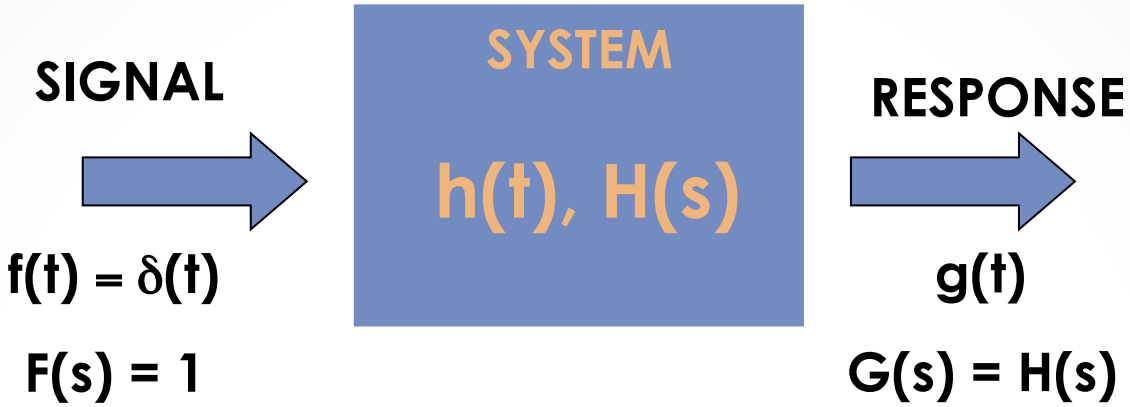

$$F(s) = L\{\delta(t)\} = \int_0^{+\infty} \delta(t) e^{-st} dt = 1$$ (Laplace transform). Therefore:

A linear system with constant parameters is uniquely characterized by the single function h(t), which is the system response to an impulse applied at t=0 (**system impulse response**).

The knowledge of h(t) allows the determination of the system response to an arbitrary input by way of the convolution integral. The same applies to its Laplace transform, the TF.

TF: examples

As already stated, it is practically easier to work in the frequency domain (this is true also in the solution of differential equations). Here you can see some fundamental examples of TF:

$$H(s) = \frac{G(s)}{F(s)} = \frac{OUT(s)}{IN(s)}$$

RLC circuit

$$H(s) = \frac{v_o(s)}{v_i(s)} = \frac{1}{LCs^2 + RCs + 1} = \frac{1/sC}{Ls + R + 1/sC}$$

Low Pass filter

$$H(s) = \frac{b_0}{s + \omega_0}$$

High Pass filter

$$H(s) = \frac{b_1 s}{s + \omega_0}$$

Any general H(s) can be expressed as a product of functions of this form

Optimal shaping: which TF?

The theory we have just settled is the tool we have to use if we want to solve our problem:

Given an input signal, whose shape we already know, heavy with a certain amount of noise, whose time behaviour we already know, what is the best TF (or impulse response in the time domain) to be used in order to have the best S/N ratio ?

Taking you through the whole journey would not be impossible but would be as climbing a 1000 m hill in 10 minutes…

… I'd better take you there by helicopter!

The Optimal filter

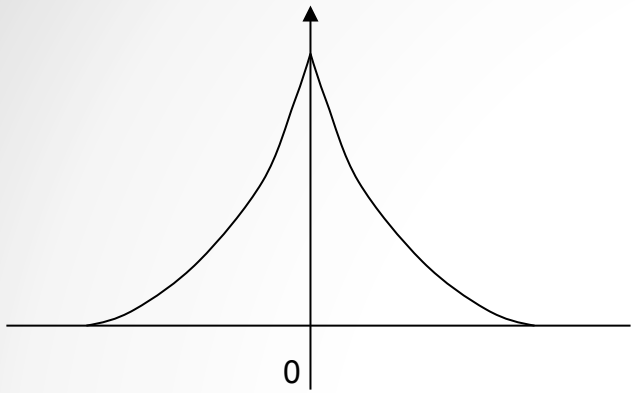

exponential Cusp

$$h(t) = \exp[-|t|/\tau_{opt}]$$

$\tau_{opt} = C_{tot}\sqrt{R_s R_p}$

Theoretically this is the optimum !

But it is not implementable in practice (the tails are infinite!)

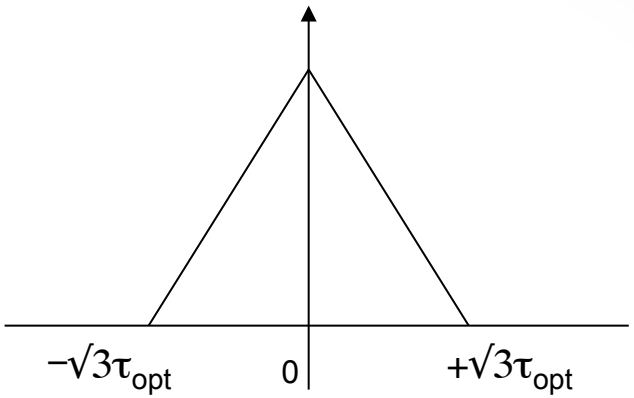

Triangle

$$h(t) = |t|/\tau_{opt}$$

$|t| < \tau_{opt}$

Second choice (after cutting the tails)

But still high ballistic deficit due to the sharp vertex (see later)

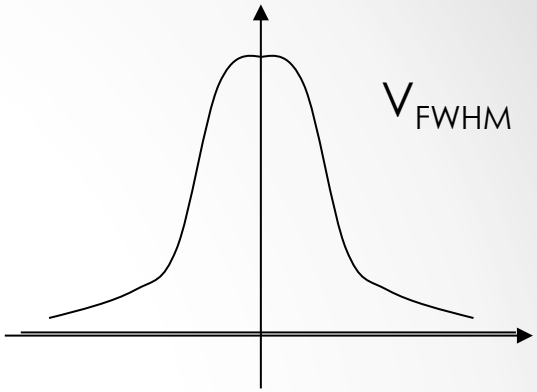

Gaussian

$$h(t) = \exp[-t/\tau]^2$$

Not good again

It has infinite tails too…

Semi-gaussian shaping

The Semi-Gaussian response is a good approximation of the ideal and is obtainable by means of one CR (differentiator) stage followed by n RC (integrator) stages

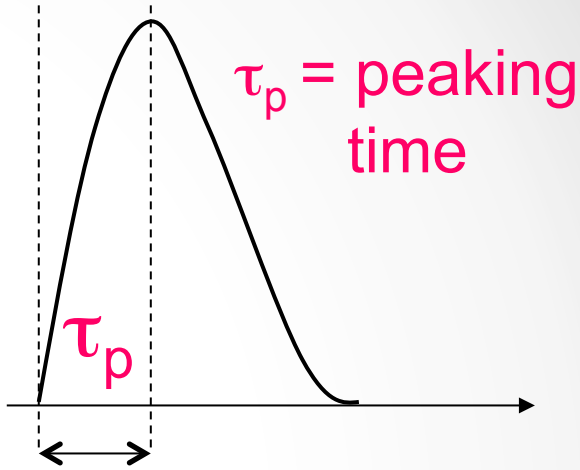

Increasing n, the approximation improves

Cusp	1
Triangle	1.075
Gaussian	1.120
CR-RC	1.359
CR-RC^2	1.215
CR-RC^4	1.165
CR^2-RC	1.410
CR^2-RC^4	1.380

At n = 4, the performance is only 16% worst than the theoretical one

However, choice depends also on other issues (e.g. power consumption)

Amplifier/Shaping chain

CR-RC

Semi-Gaussian Shaping

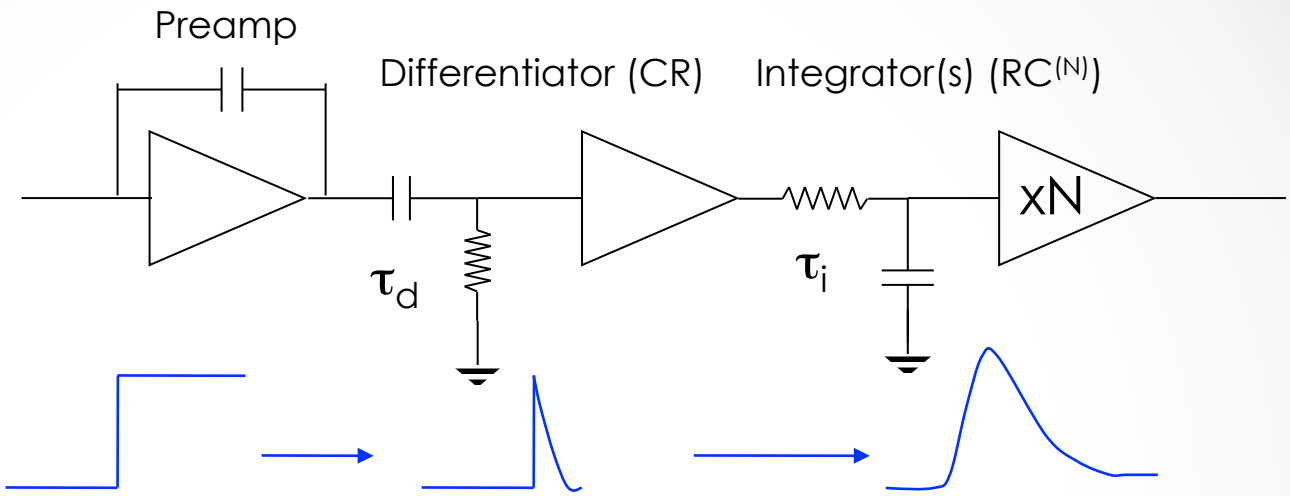

$$H(s) = \frac{1}{sC_f} \times \frac{s\tau_d}{1+s\tau_d} \times \frac{1}{1+s\tau_i}$$

$$h(t) = \frac{1}{C_f} \otimes \delta(t) - \frac{1}{\tau_d} e^{-t/\tau_d} \otimes \frac{1}{\tau_i} e^{-t/\tau_i}$$

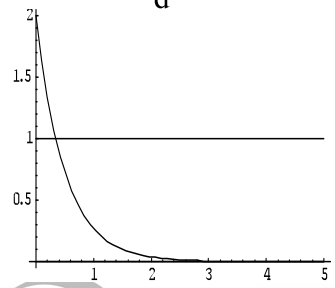

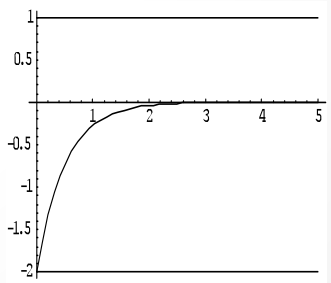

Often

$\tau_d = \tau_i = \tau$ = peaking time = T_m

Summary about Noise and Shaping

- Detection and Amplification bear intrinsic and unavoidable noise. This can be minimized but never eliminated.
- In particular, voltage and current noise behave in opposite way with respect to the "time of measurement". Therefore, an optimal point has to be found.
- Once all the noise contributions have been spot correctly, Circuit Theory allows finding the exact solution for the optimization of the S/N ratio.
- The typically adopted solution is a Semi-Gaussian TF, made of 1 CR stage followed by n RC stages (typically $n \leq 4$).

Beyond Shaping

Other effects affecting resolution

Pile Up

If the Shaper characteristic time is of the order of the input signal (event) rate:

$\tau \sim 1/\text{Rate}$,

then output signals can pile-up, giving a wrong amplitude measurements

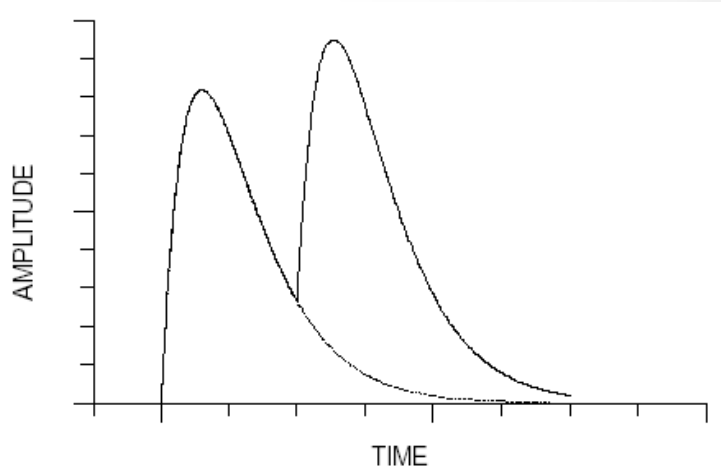

τ cannot be chosen "at will", unless you can tolerate some dead time: trade-off between precision and speed

Base Line fluctuations

When an unipolar signal crosses a CR stage, a negative undershoot is originated (charge must be conserved!)

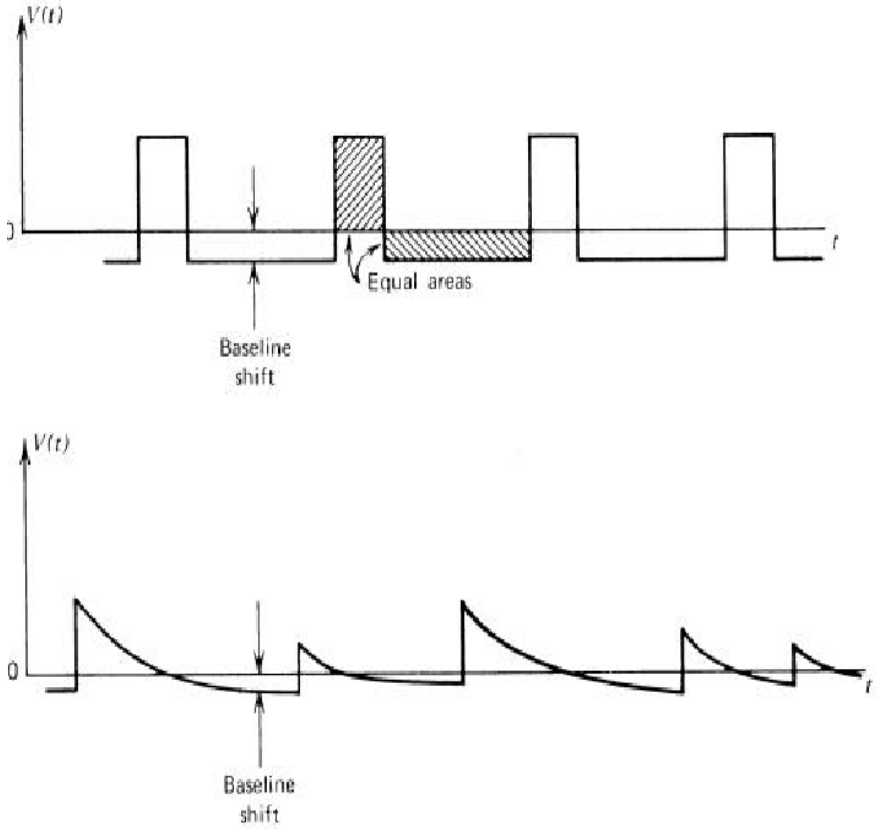

Baseline Shift

Baseline Restoration is necessary to avoid errors in the measure of the Voltage peak output from the Amplifier-Shaper chain

Pole-Zero Cancellation

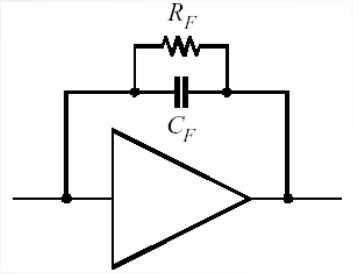

As $R_F \neq \infty$,

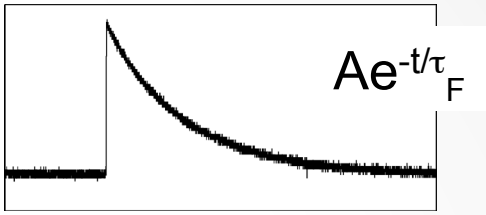

Charge Sensitive Amplifier

Output from the CSA

Crossing the CR (differentiator) stage, this signal MUST give an output of this kind

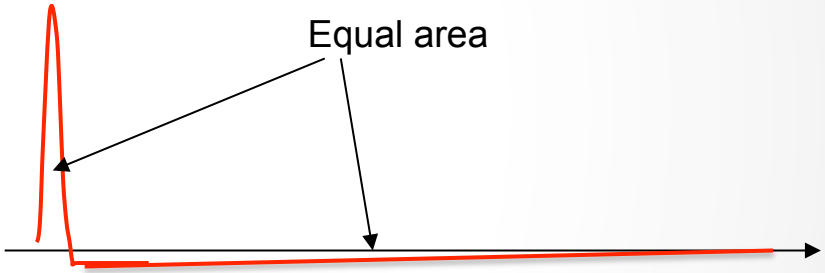

This problem is usually solved adding a compensating zero in the chain, at the same frequency of the CR pole

$$H(s) = \frac{\tau_d}{C(1+s\tau_d)(1+s\tau_i)} \longrightarrow H(s) = \frac{\tau_f \tau_d}{C(1+s\tau_f)(1+s\tau_d)(1+s\tau_i)}$$

PZC: more details

$$H(s) = \frac{1}{\tau_d(\frac{1}{\tau_d} + s)} \xrightarrow{PZC} H(s) = \frac{\tau_f(\frac{1}{\tau_f} + s)}{\tau_d(\frac{1}{\tau_d} + s)}$$

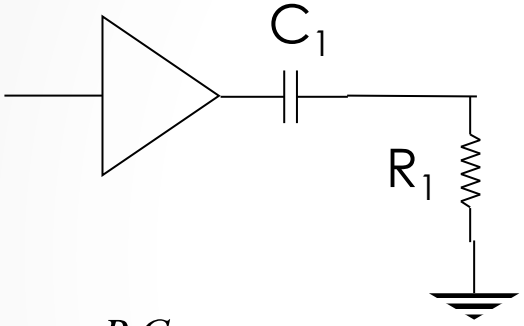

PZC

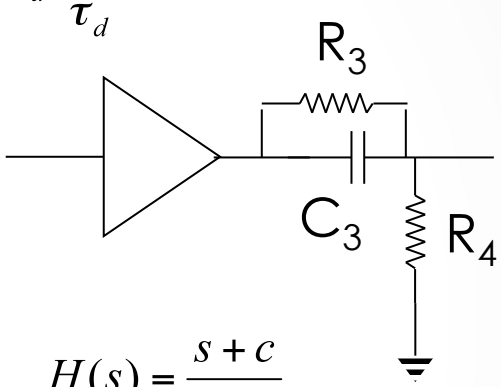

$$R_1 C_1 = \tau_d$$

$$H(s) = \frac{1}{(1 + s\tau_d)}$$

$$H(s) = \frac{s + c}{s + d}$$

$$c = \frac{1}{R_3 C_3} \rightarrow \frac{1}{\tau_f}$$

$$d = \frac{1}{C_3}\left(\frac{1}{R_3} + \frac{1}{R_4}\right) \rightarrow \frac{1}{\tau_d}$$

The same method can be used to regulate the length of the Shaper response (tail cancellation)

Ballistic Deficit

When the peaking time is smaller than the charge collection time on the detector capacitance:

$$\tau_s < t_{coll}$$

then the signal amplitude is under-estimated

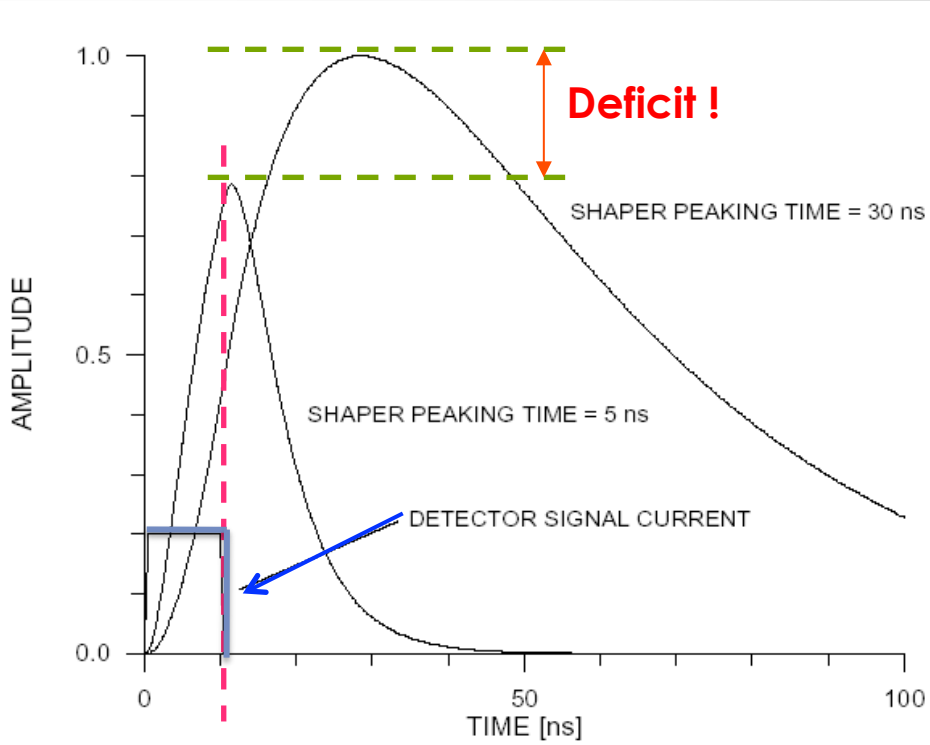

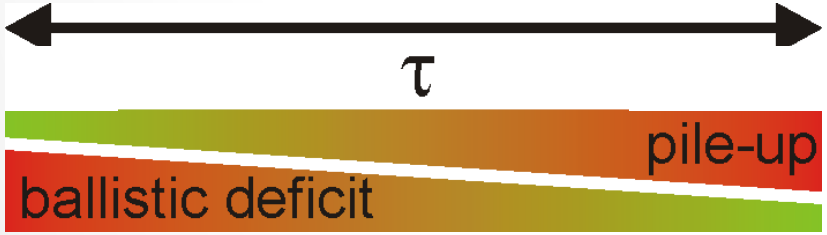

Even if the rate is small (and τ could be long if necessary to minimize noise), τ cannot be large at will

Beyond the amplification chain…

Extrinsic noise

That is:

Why S/N theory sometimes appears to be irrelevant?

Extrinsic noise

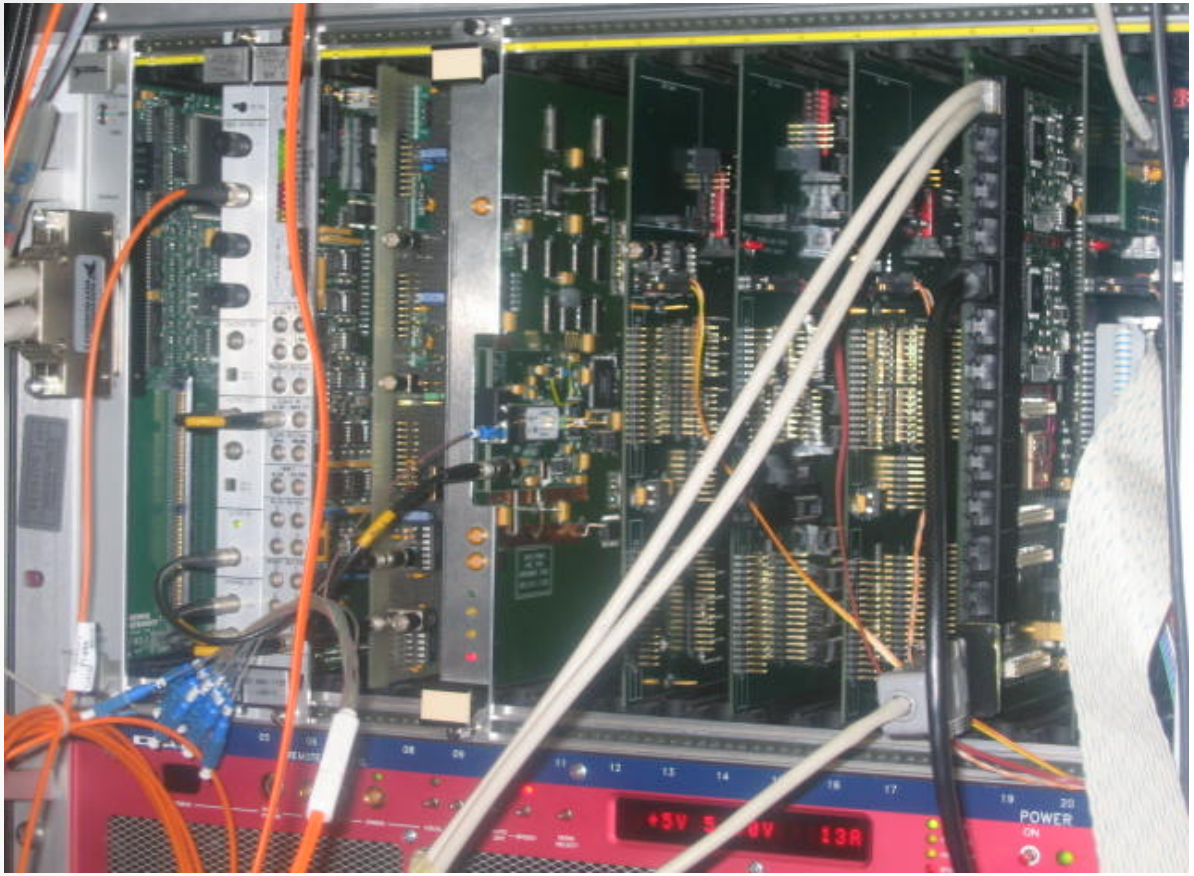

… Is this is the reason why many physicists are practically (not theoretically!) superstitious and "believe" in magic ?

(or at list think that somehow electronics has a soul)

Intrinsic vs Extrinsic

Extrinsic noise is originated outside the amplifier chain and generated at "system" level (PCB, connections, RF, grounding…)

The problem is:

- Indeed, we do not know what are "the boundaries" of our system;
- The system is usually big(er) and (more) complex than we imagine
- The connections and the interconnections outside and inside our system are many more than we assume

As a consequence, Extrinsic noise appears as:

- Systematic,
- Signal-uncorrelated ("quasi-random")
- Nasty

Extrinsic Noise categories

We will distinguish 2 main categories:

1. Pick-up of spurious signals, coming from "internal" and/or "external" sources.

   "Internal": clock signals, digital part activity, generic cross-talk with other parts of the system;

   "External": RF interference.

2. Bad grounding network, causing:

   Shifts and disturbances on the signal baseline or even…

   …System auto-oscillations: uncontrolled/unwanted system feedback paths generating self-sustained oscillations.

Pick-up

Examples of Pick-up Sources:

- Power grid (50 Hz)
- Power supplies: 50 Hz "hum"
- Switching supplies: Ac → DC –D DC chopped …?
- Radio-TV
- Cellular phones

- Digital part of the circuit (high frequency switching)
- Microphonic effect (oscillation of metallic surface and capacitive coupling)

Radio Frequency

The critical frequency range depends on the shaping time τ (amplifier bandwidth):

$$f \approx \frac{1}{2\pi\tau}$$

Typical RF sources and their frequency range:	AM:	0.5 – 1.5 MHz
	FM:	~100 MHz
	TV:	50-800 MHz
	Induction furnaces	tens of MHz
	Accelerators	(LHC, 40 MHz)

And also:	Computers:	100 MHz - GHz
	Monitors:	~100 kHz
	Radar:	GHz

Diagnostics:

a) Oscilloscope: periodic structures on the baseline – difficult to spot

b) Spectrum Analyzer: sometimes "too" efficient, requires some expertise to identify the relevant frequencies

Shielding

Attenuation of the EM waves by a conductive shield

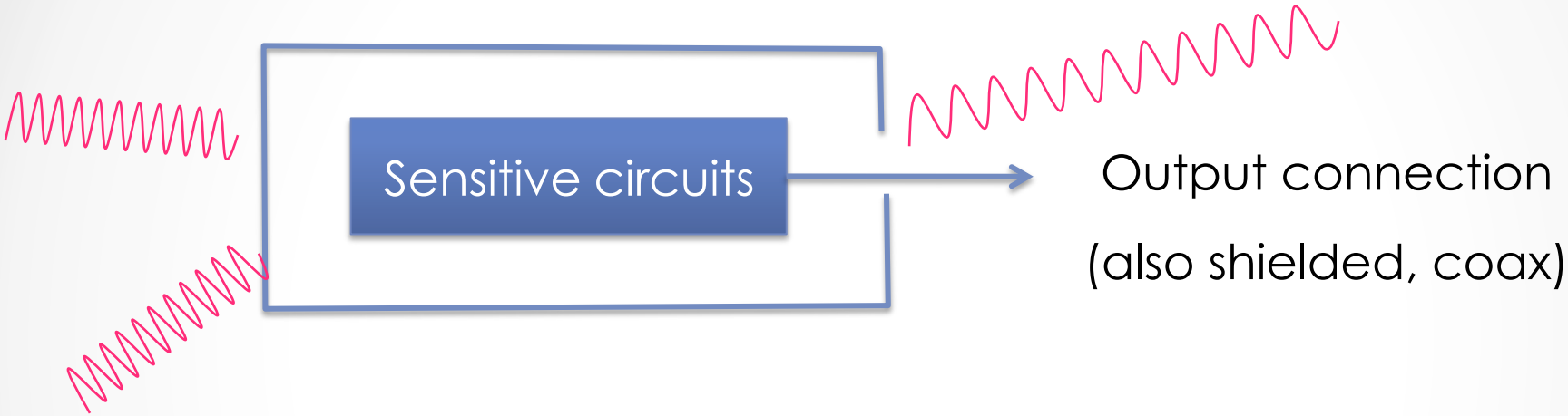

- Openings with size < $\lambda/1000$
- All connection cables have to be shielded (at least at 90%)
- Connectors should not interrupt shielding
- Continuity of shield on the mechanical junctions

Effects of Shielding

Attenuation of the EM waves by a conductive shield

Reflection

$$E_{0r} = E_0\left(1 - \frac{Z_{shield}}{Z_0}\right)$$

$$Z_0 = \sqrt{\frac{\mu}{\varepsilon}} = 377\,\Omega$$

If Z_{shield} is small enough, a large amount of the wave is reflected

Absorption

$$i(x) = i_0 e^{-x/\delta}$$

$$\delta = \frac{1}{2\cdot 10^{-4}}\left[\sqrt{\mathrm{cm}\cdot \mathrm{s}^{-1}}\right]\sqrt{\frac{\rho}{\mu_r f}}$$

δ ("skin depth") is larger (deeper wave penetration) when ρ increases and f diminishes

Example: Aluminium

ρ = 2.8 $\mu\Omega$cm, μ_r = 1 → if f = 1 MHz, δ = 84 μm ~ 100 μm.

GROUND

What is GROUND?

Ground can be defined as a conductive surface of large area and low impedance, where all the currents circulating in a circuit have to return to.

For this reason it is "normally considered" as an equipotential surface or line.

Unfortunately, this is not always the case (and this is the first mistake):

1. The Ground line (or the connections to it) can have a "significative" impedance;
2. Even large area surfaces can show an impedance in certain conditions (high frequency signals, in particular).

GROUND and impedance

At high frequencies, current tends to flow on the surface ("skin effect")

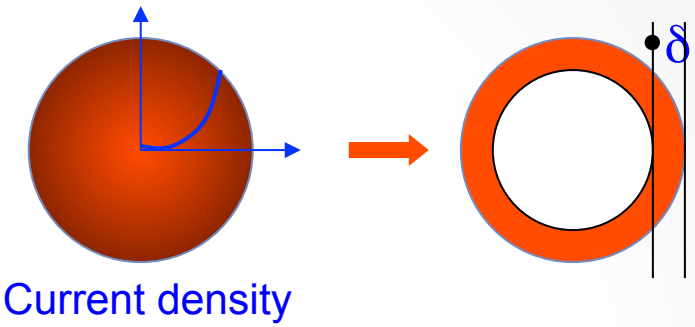

$$R = \rho \frac{L}{A}$$

Example: Al @ 1 MHz δ = 100 μm

A signal having t_r ~ 3ns contains frequency components with

f > 100 MHz → δ = 10 μm

Example: Al trace, 1 cm wide, 5 cm long: → R ~ 20 mΩ @ 100 MHz, 100 mA → ΔV = 2 mV

Same result for a 1 mm x 5 mm trace

Inductance can considerably increase this effect

Ground and Ground Loops

What is a ground loop?

It is a current path which is common to two or more parts of the system

Ground loops are the main cause of undesired signal transfer between different parts of the system, because:

- The ground connections are not with impedance Z = 0, as it could be wrongly envisaged;
- The current path, when everything is connected to the same point, is not so straightforward to be controlled;
- Different part of the circuit, with different impedances and different sensitivities, can be connected together, causing injection of spurious signals.

As a general rule, **it is wrong and dangerous, although common practice**, to build an (uncontrolled, yet "large") common ground in a circuit, instead of a fixed (and controlled) number of current return paths, with known impedance.

If a return path is not explicitly supplied to current, it will find it by itself (and most probably will be a "bad" one)

Ground loop mechanism

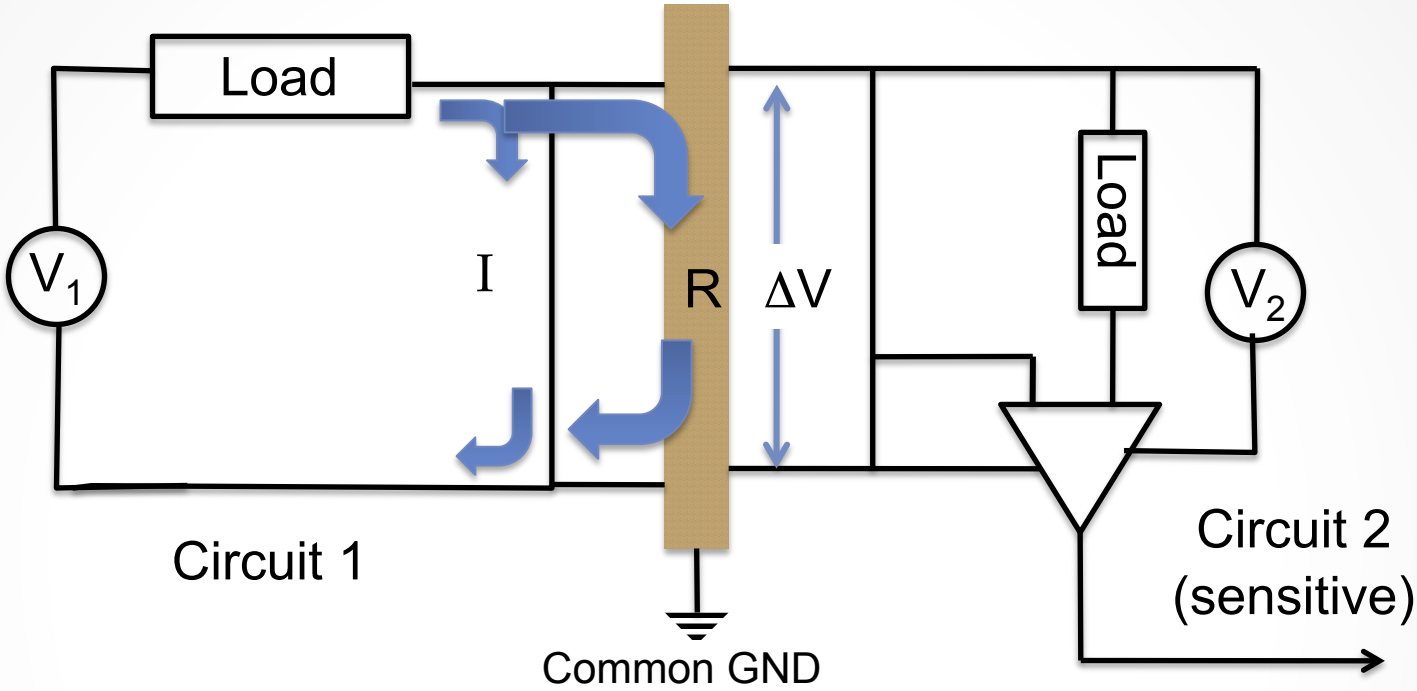

Current looks for minimum impedance path (GND bus), so the bigger amount flows along the GND bus. This causes a V drop $\Delta V = RI$, which sums up to V_2, **in the sensitive circuit**.

Another example is the connection of a transmission line to GND at the two ends of it.

GND loops: digital vs analog

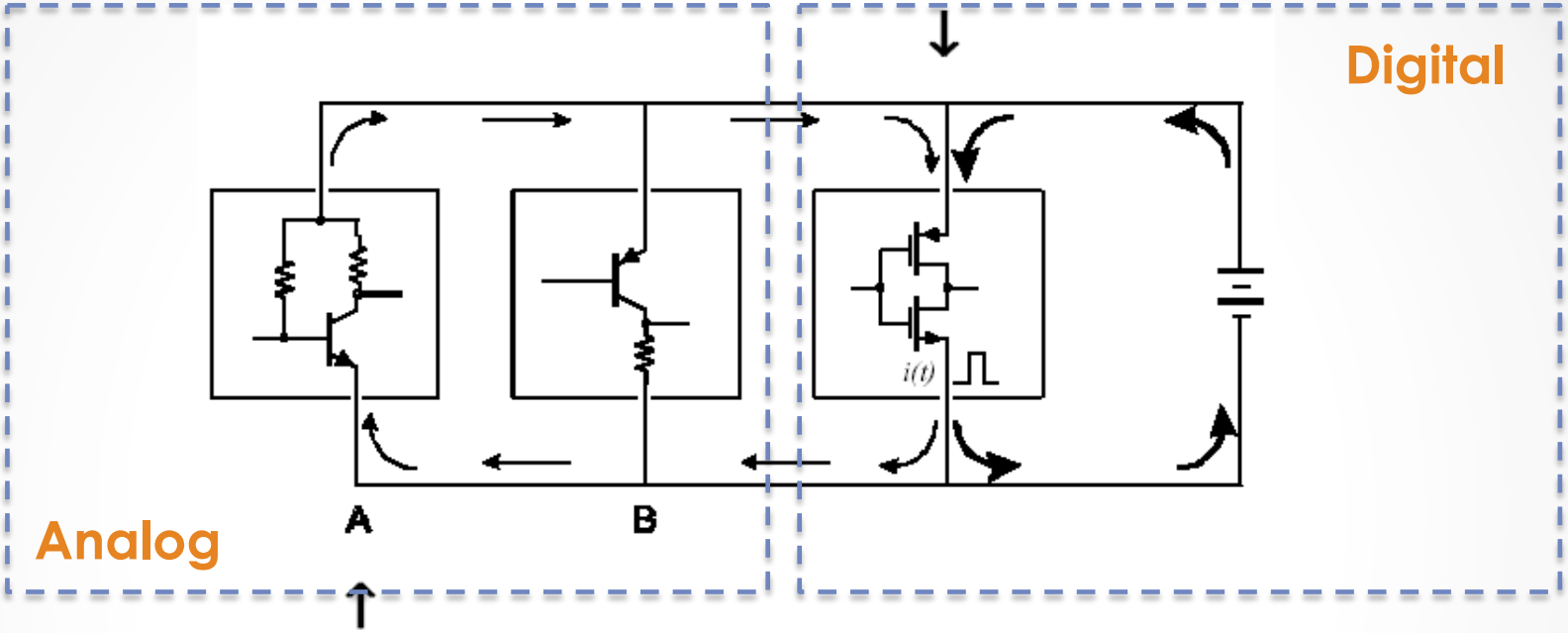

Digital circuits are usually fast switching and high consuming (e.g. current or voltage spikes at clock switching).

Analog ones are precise and sensitive to small ΔV.

If a common GND with uncontrolled return paths is there, current will return across minimum Z paths, which can be the most sensitive to ΔI or ΔV (see the A node in the scheme)

EM induction

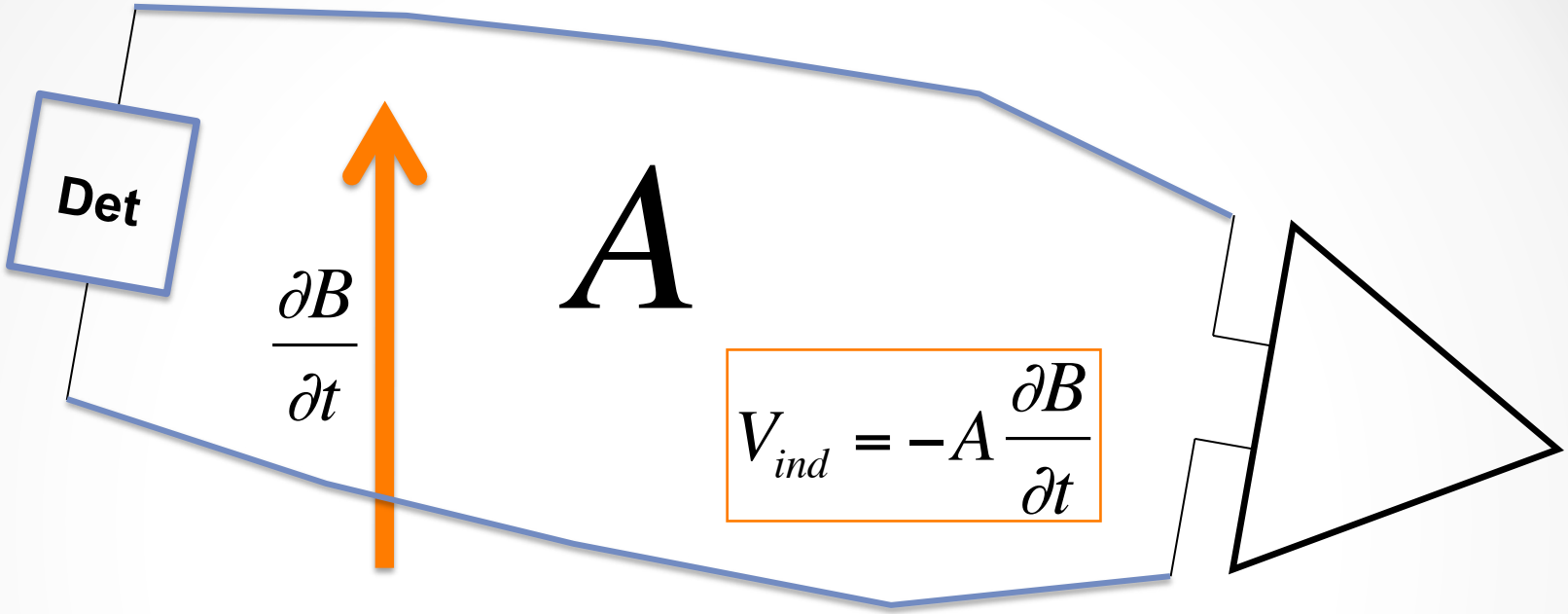

This is a possible side effects of loops. Area A should be kept at minimum. Large loops are prone to EM induction in presence of RF or magnetic disturbances:

Another reason to keep a signal close to its return path (e.g. better **use twisted pair connections**!)

Remedies to GND loops

As a general rule, we should not think of GND as a infinite sink of current and a quite V = 0 circuit node, but as the return path of the current, having low and yet not zero impedance.

On the contrary, a very common (and bad!) habit is attacking ground loop problems trying to "improve ground connection": this is also said the **"copper braid syndrome" or "the more ground, the better"**.

Usually this remedy is never a definitive one. It can seemingly cure the problem, but system operation is not under control. Therefore, problems easily pop up again (sometimes simply "moving or touching" the system!)… **and you add more copper ?!**

Remember: circuits need current return paths, not GND connections!

Rules of thumb

1. The return path is not a node but a network, which should be carefully designed as an important part of your system.
2. Expressly add specific return (low Z) paths in your circuit, in order to localize the current loops in small portions of your system. In particular, isolate sensitive circuits from "sturdy" or noisy ones.
3. Be careful to parasitic paths, generating uncontrolled loops, and try to break them whenever possible. Often, dependently on the nature of the disturbance, adding a resistor, a capacitor or an inductance in the right place is sufficient.
4. Prefer using differential drivers and receivers in inter-connections

Loop cut by C

Suitably connecting a **bypass capacitor**, localizes the current I_{out} preventing it to loop on the amplifier stage

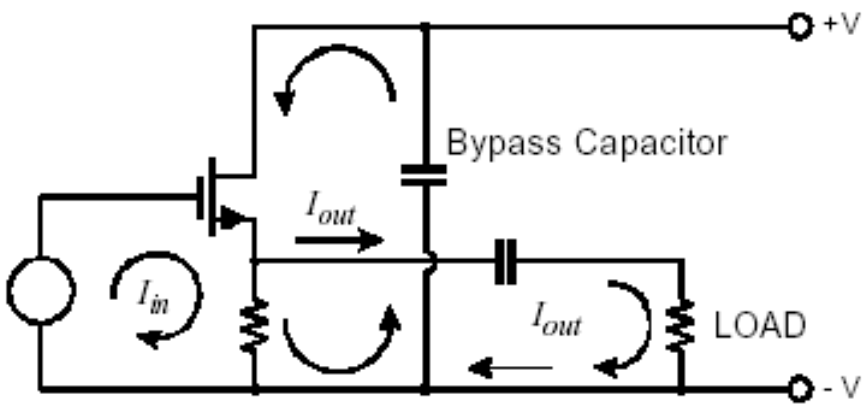

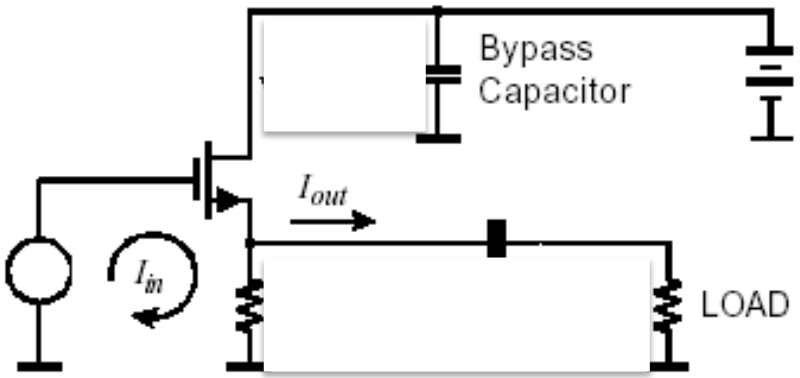

Parasitic path cut by R

The sensitive front-end is shielded, interconnection cables are coaxial (also shielded).

The possibly noisy supply is **isolated using resistors** to increase the impedance of the return path towards FE

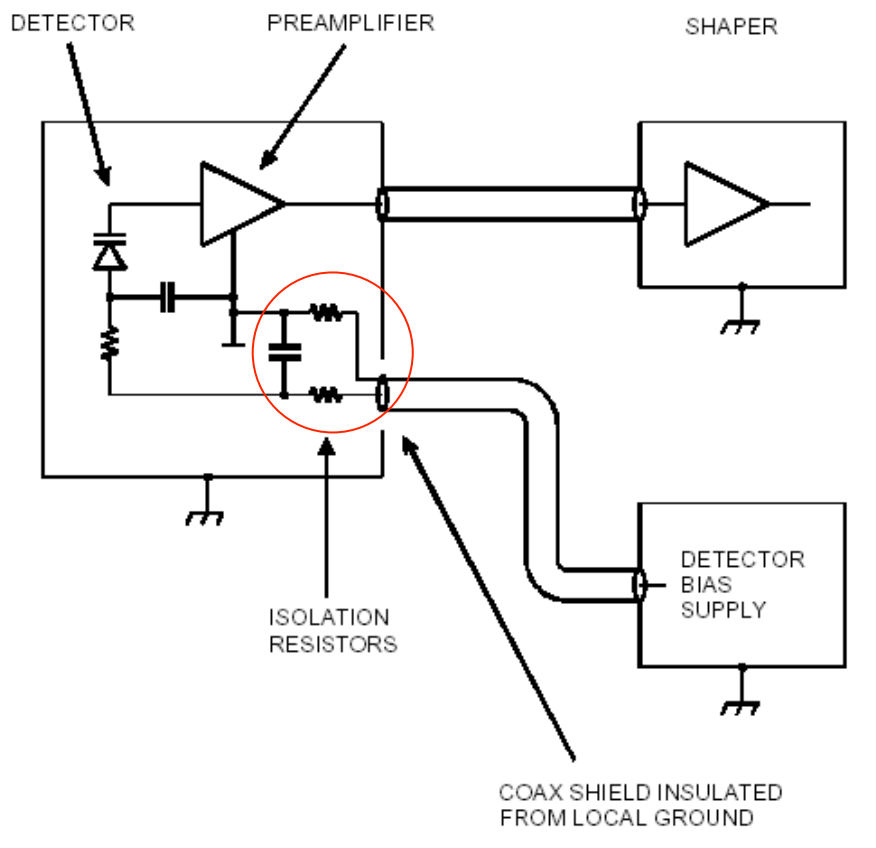

Cutting parasitic paths by L

Ferrite sleeves (or beads or chokes…) are often used to **break the flow of common mode HF currents** in coax) or even unipolar) cables

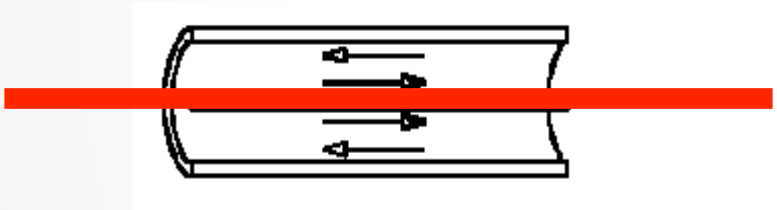

In a coax, signal flows:

- On the external skin of internal conductor
- On the internal skin of the external shield (return current)

→ The external field is zero

→ The signal si not affected, while parasitic (unbalanced) currents flowing on the external skin of the shield are suppressed by ferrite

Ferrite effect

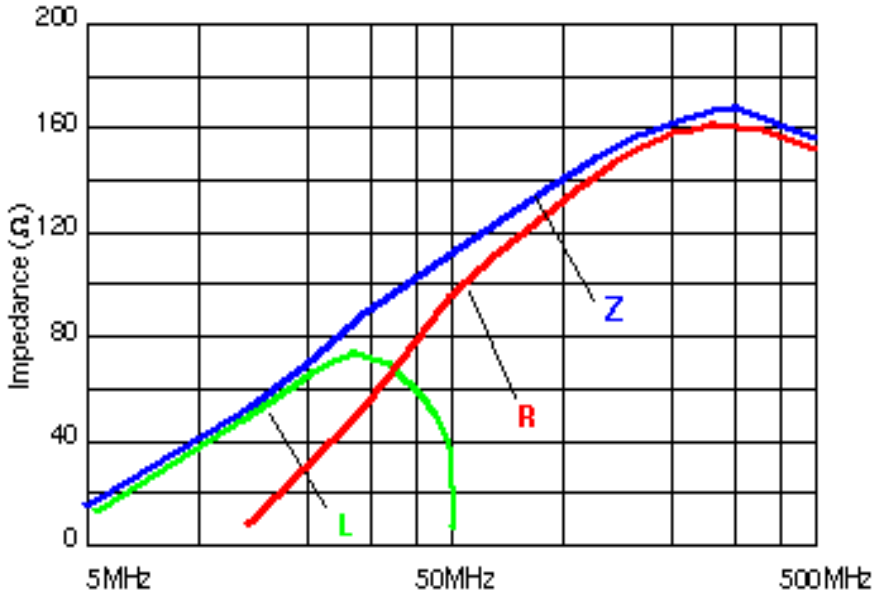

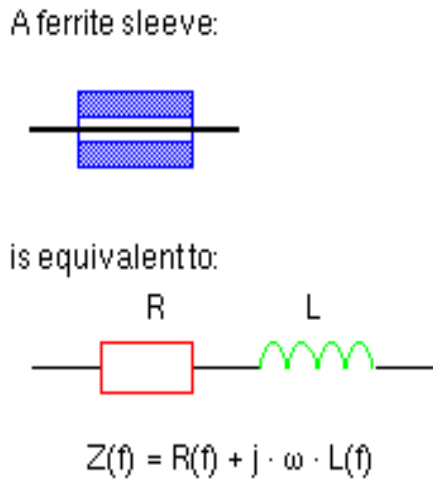

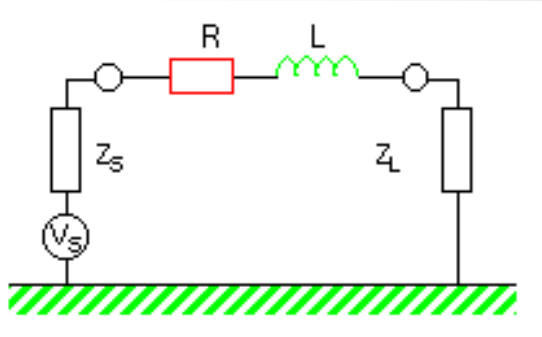

Equivalent circuit

The ferrite choke behaves like a passive low-pass filter. It opposes to HF currents generating an EMF by its equivalent L and dissipating the signal energy by its equivalent R. Maximum attenuation A happens when Z_S (source impedance) and Z_L (load impedance) are small:

1) $Z_L = Z_S = 10\Omega$, $Z_{ferr} = 100\Omega$ $A = 20\log_{10}[(10+10)/(10+100+10)] = -15.6dB$ (~ 0.17)

2) $Z_L = Z_S = 200\Omega$, $Z_{ferr} = 100\Omega$ $A = 20\log_{10}[(200+200)/(200+100+200)] = -2dB$ (~ 0.8)

Conclusions

We quickly flew on the land of electronic noise

Where we found ordered and crowded intrinsic towns and dangerous extrinsic forests without well defined paths

In the end, maybe it has not be even a journey but only the planning of a journey

I hope it has been at least for some of you a good planning and a useful map for you to take the courage of this exiting trip

Further material and readings

Nicholson, *Nuclear Electronics* – John Wiley & Sons

Radeka, *Low Noise Techniques in Detectors*, Ann. Rev. Nucl. Part. Sci. 1988, 38, 217

Scott, *An Introduction to Circuit Analysis*, McGrawHill

Motchenbacher-Connelly, *Low Noise Electronic System Design* – J. Wiley and sons

H. Spieler, *Introduction to Radiation Detectors and Electronics,* www-physics.LBL.gov/~spieler

Useful information in Application Notes from ORTEC, AMPtek and other companies developing Electronics for Physics (search the web).

Thank you for your attention !!!