*Overview of Recent Developments in Pellet Injection for ITER**

S.K. Combs[a], L. R. Baylor[a], S. J. Meitner[a], J.B.O. Caughman[a], D.A. Rasmussen[a], and S. Maruyama[b]

[a]Oak Ridge National Laboratory, Oak Ridge, Tennessee

[b]ITER Organization, Route de Vinon sur Verdon, 13115 Saint Paul Lez Durance, France

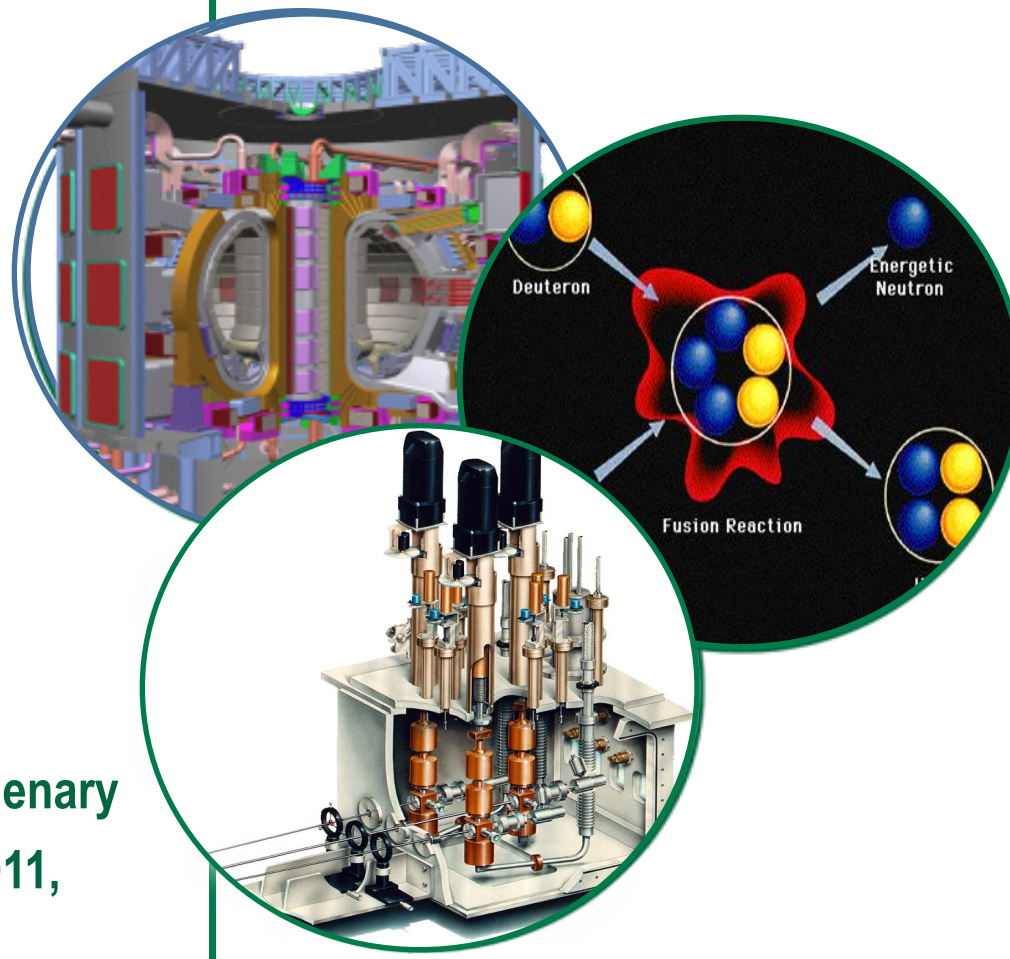

Presentation for: **FED FEST Seminar**

December 1, 2011

(Originally presented as invited plenary talk at ISFNT-10, 14-September-2011, Portland, Oregon)

*The views and opinions expressed herein do not necessarily reflect those of the ITER Organization.

U.S. DEPARTMENT OF ENERGY

iter china eu india japan korea russia usa

OAK RIDGE NATIONAL LABORATORY

MANAGED BY UT-BATTELLE FOR THE DEPARTMENT OF ENERGY

Contents

1. Introduction
2. History of R&D support at ORNL
3. Basic Design and Operating Parameters
4. Pellet Injector Development
5. Summary and Conclusions

Definitions: "PIS" refers to the Pellet Injection System
"HFS" refers to the magnetic High-Field Side of machine (inner wall on tokamaks)
"LFS" refers the magnetic Low-Field Side of machine (outer wall on tokamaks)
"Fueling efficiency" = change in total # of plasma electrons/full particle content of injected gas or pellet
"ELM" refers to Edge Localized Mode and will be discussed later

ITER Fueling Needs Are Significant

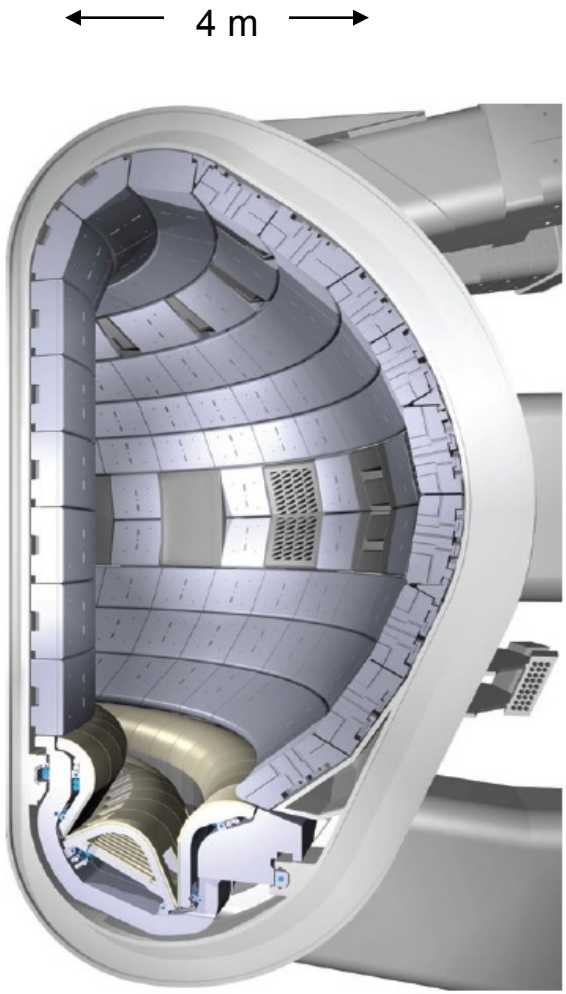

ITER Cross Section

- ITER plasma volume is 840 m^3 with a scrape-off layer of ~30 cm thick (20 m^3 and ~5 cm for DIII-D)

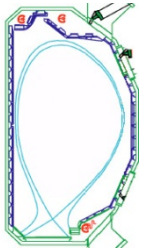

DIII-D Cross Section

ITER Fueling Needs Are Significant

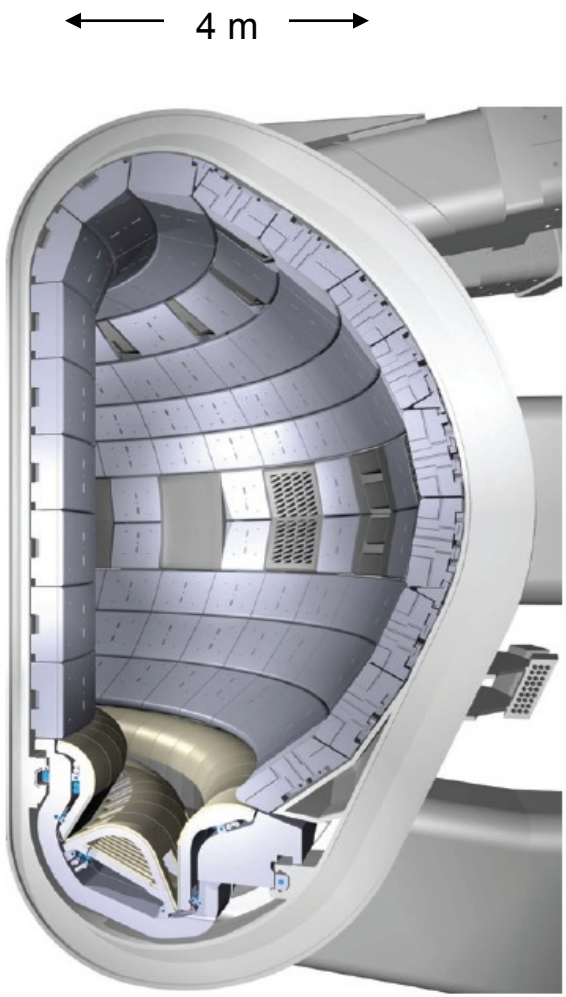

ITER Cross Section

- ITER plasma volume is 840 m^3 with a scrape-off layer of ~30 cm thick (20 m^3 and ~ 5 cm for DIII-D)
- ITER is designed to operate at high density (> $1x10^{20}$ m^{-3}) with D-T in order to optimize Q

ITER Fueling Needs Are Significant

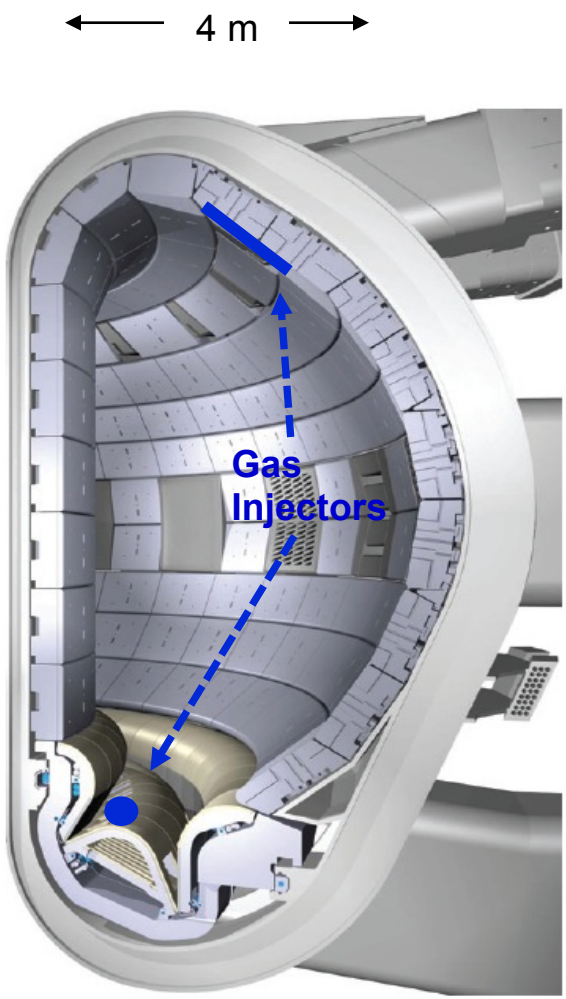

ITER Cross Section

- ITER plasma volume is 840 m^3 with a scrape-off layer of ~30 cm thick (20 m^3 and ~5 cm for DIII-D)
- ITER is designed to operate at high density (> 1×10^{20} m^{-3}) with D-T in order to optimize Q
- Gas is to be introduced from 4 ports on outside and 6 ports in the divertor region (fueling from NBI is negligible)

ITER Fueling Needs Are Significant

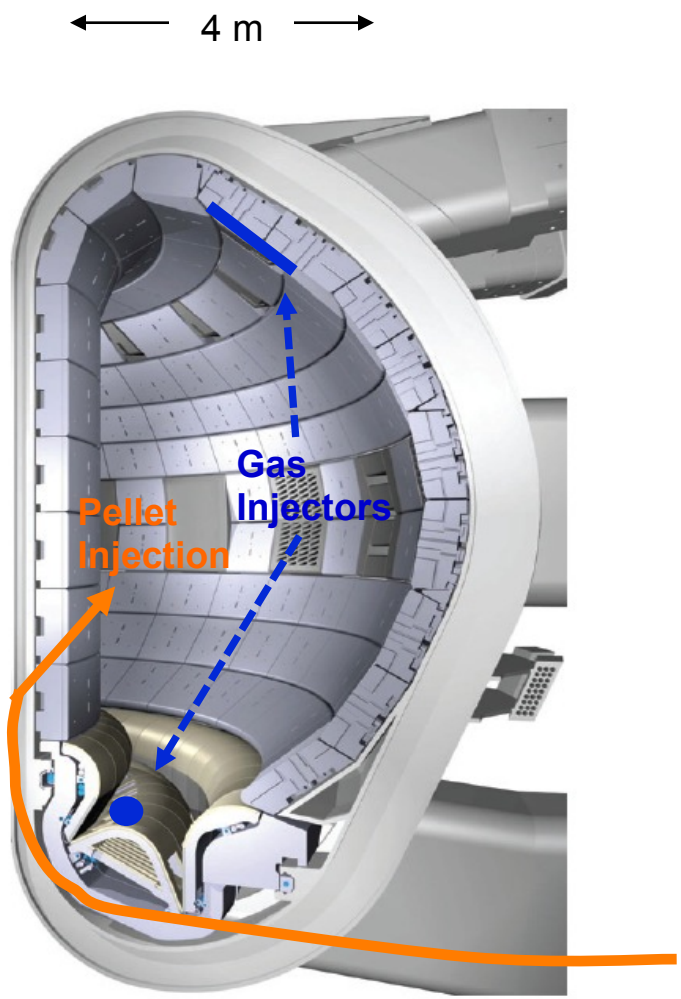

ITER Cross Section

- ITER plasma volume is 840 m^3 with a scrape-off layer of ~30 cm thick (20 m^3 and ~ 5 cm for DIII-D)
- ITER is designed to operate at high density (> 1×10^{20} m^{-3}) with D-T in order to optimize Q
- Gas is to be introduced from 4 ports on outside and 6 ports in the divertor region (fueling from NBI is negligible)
- Pellet injection from the HFS (inner wall) is planned for deep fueling and high efficiency; reliability must be very high

ITER Fueling Needs Are Significant

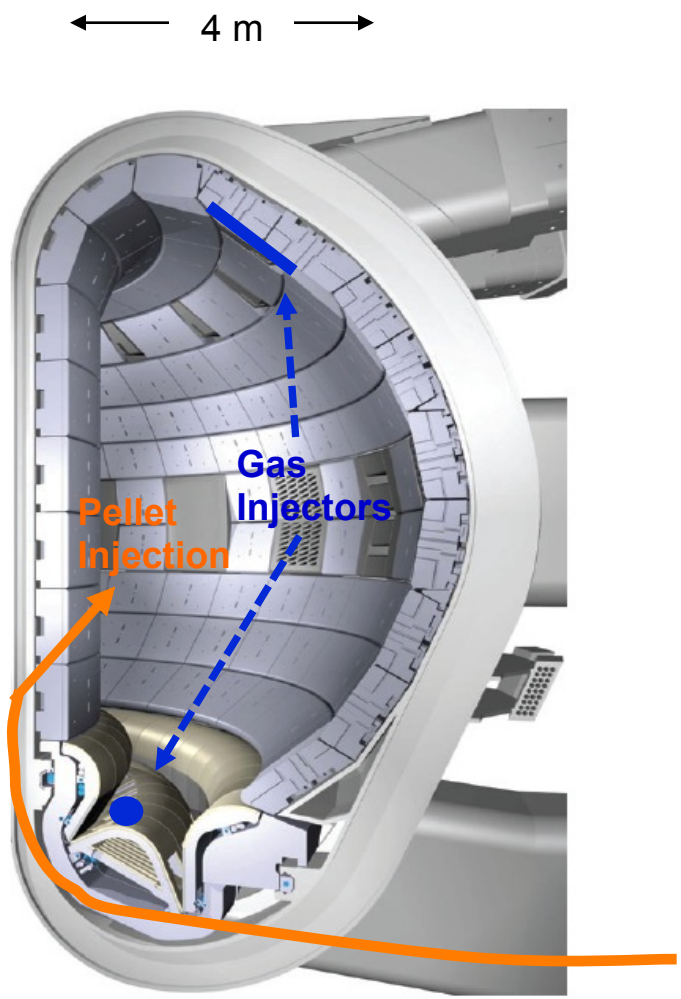

ITER Cross Section

- ITER plasma volume is 840 m^3 with a scrape-off layer of ~30 cm thick (20 m^3 and ~5 cm for DIII-D)
- ITER is designed to operate at high density (> $1x10^{20}$ m^{-3}) with D-T in order to optimize Q
- Gas is to be introduced from 4 ports on outside and 6 ports in the divertor region (fueling from NBI is negligible)
- Pellet injection from the HFS (inner wall) is planned for deep fueling and high efficiency; reliability must be very high
- ITER will require significant fueling capability to operate at high density for long durations
  - Gas fueling will be limited by poor neutral penetration (<1% fueling efficiency)

ITER Fueling Needs Are Significant

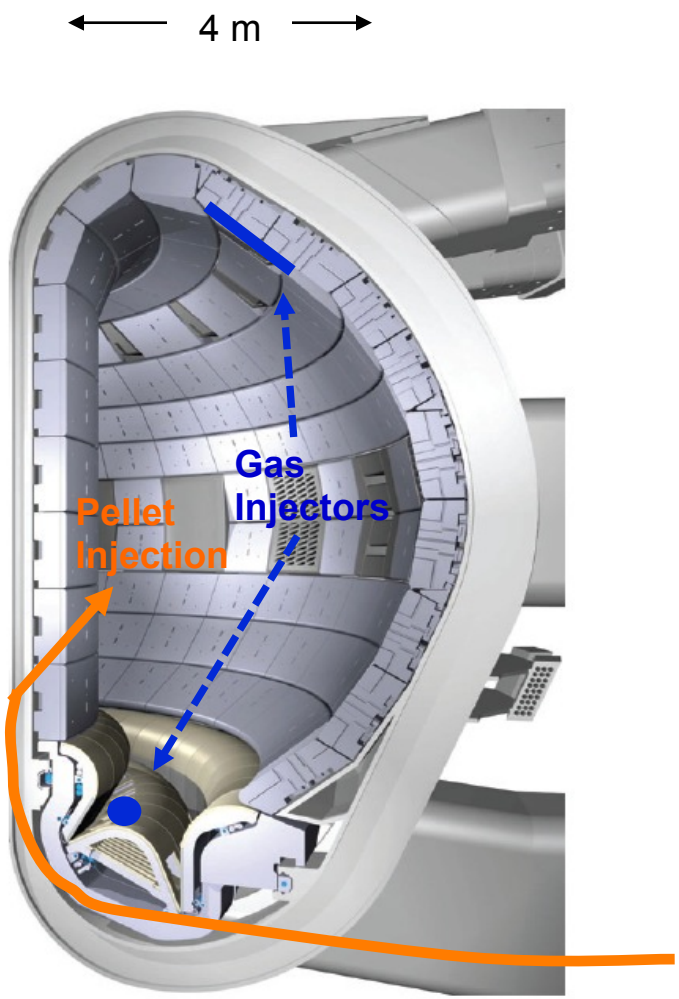

ITER Cross Section

- ITER plasma volume is 840 m^3 with a scrape-off layer of ~30 cm thick (20 m^3 and ~5 cm for DIII-D)
- ITER is designed to operate at high density (> $1x10^{20}$ m^{-3}) with D-T in order to optimize Q
- Gas is to be introduced from 4 ports on outside and 6 ports in the divertor region (fueling from NBI is negligible)
- Pellet injection from the HFS (inner wall) is planned for deep fueling and high efficiency; reliability must be very high
- ITER will require significant fueling capability to operate at high density for long durations
  - Gas fueling will be limited by poor neutral penetration (<1% fueling efficiency)
- Fusion burn fraction is small ~ 1%, thus high fueling rate is required and fuel must be re-circulated

Pellet Injection is Crucial for Effective Core Fueling in ITER as Shown in H-mode Fueling Source Profile Comparison

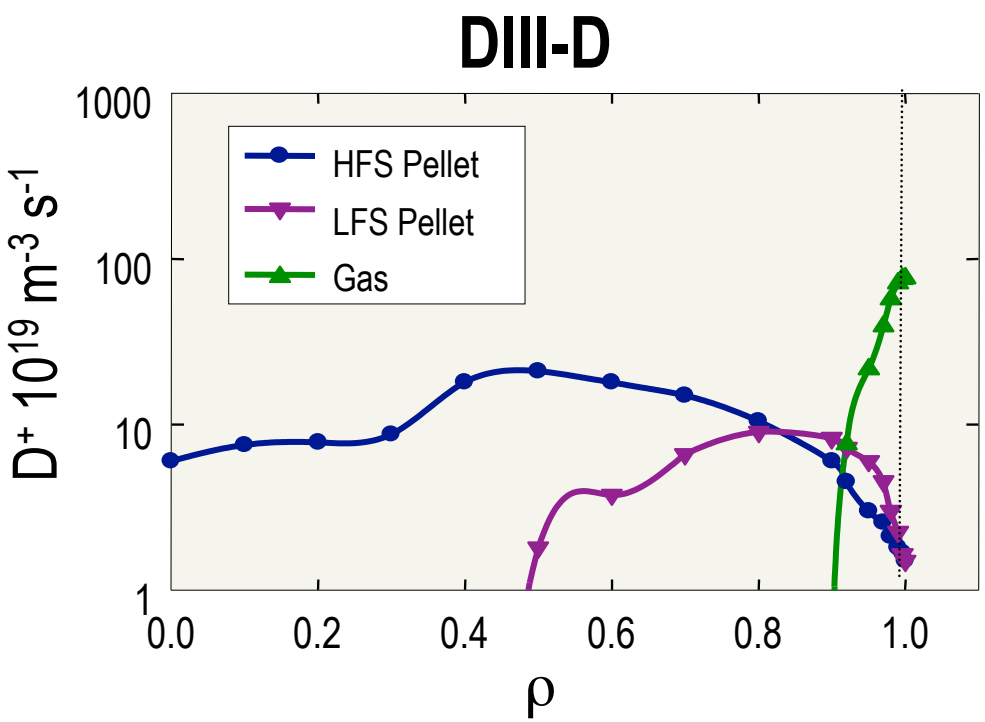

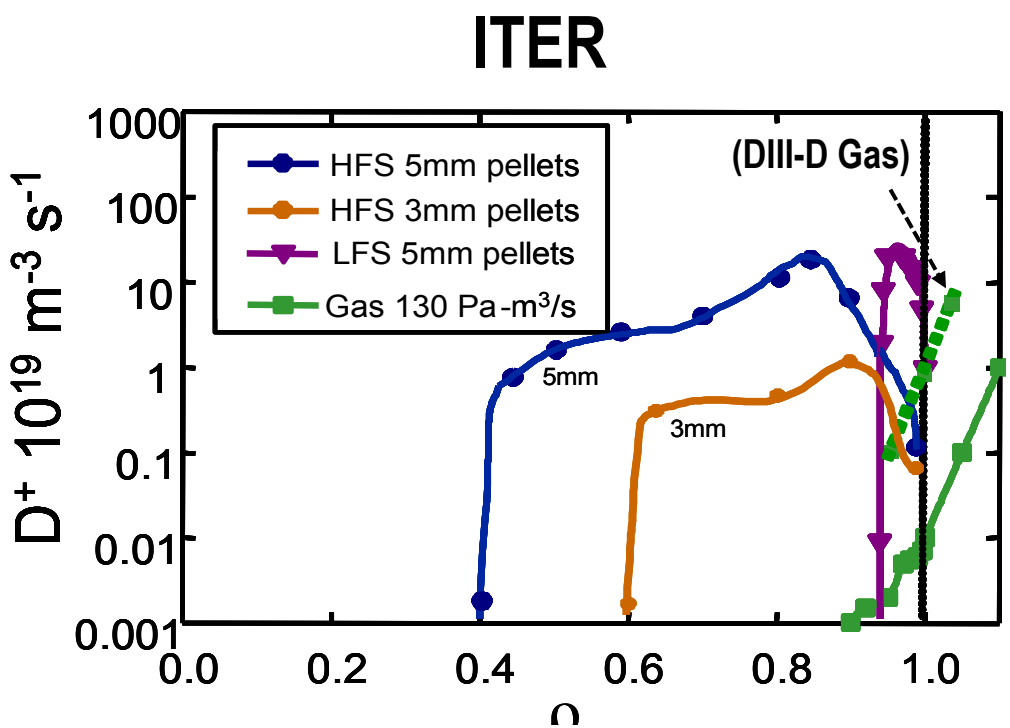

- Fueling with gas in ITER will be much less effective than in DIII-D
  - Pellet profiles for ITER are from PRL (P. Parks); 5-mm pellets @ 16 Hz is reference for core fueling
  - Gas profile for ITER is from B2-Eirene slab calculation (L. Owen and A. Kukushkin)
- HFS pellet injection has much higher "fueling efficiency" in delivery of particles into the plasma core

ITER Injectors Can also Provide Small Pellets for "ELM Pacing"

Edge Localized Mode: periodic instability related to the H-mode edge transport barrier

- ELMs result from edge pressure clamped at ballooning limit – transient breakdowns of edge barrier – filaments are ejected from the plasma
- Significant fraction of the total plasma stored energy ~5% can be expelled by an ELM (>10 MJ on ITER)
- Significant erosion of plasma facing materials will occur for ELM bursts greater than 1 MJ
- A method to eliminate large ELMs or induce rapid small ELMs is needed for ITER
- Injection of "small" pellets at relatively high frequency (>15 Hz) can trigger small ELMs and help to avoid/minimize harmful effects on the ITER divertor from the larger natural ELMs

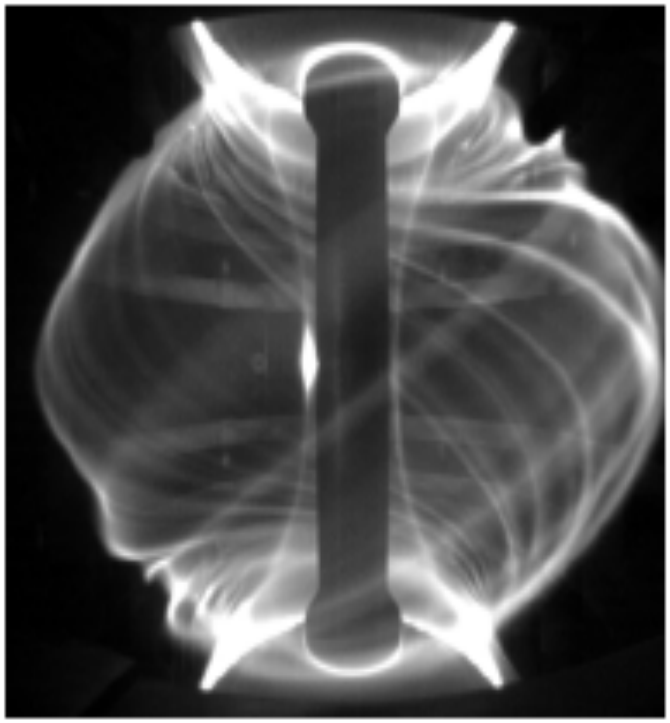

Filaments evolving during ELM on MAST. Kirk, et al. PRL 2004.

Contents

1. Introduction
2. History of R&D support at ORNL
3. Basic Design and Operating Parameters
4. Pellet Injector Development
5. Summary and Conclusions

ORNL Has Long History of R&D Support for ITER Pellet Fueling

EXAMPLE: Tritium pellet experiments at TSTA(1988-1997) provided data and experience with T_2 & D-T mixtures directly relevant for ITER design

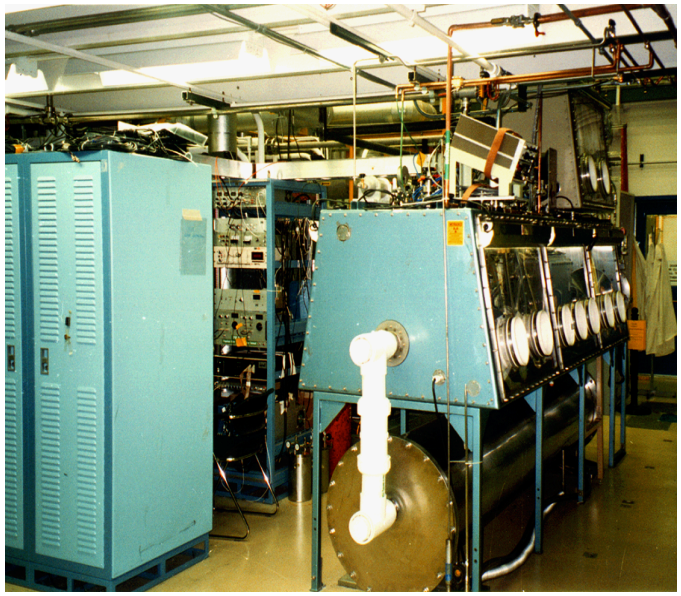

Tritium Pellet Injector at TSTA

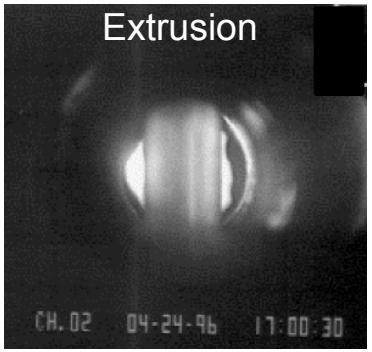

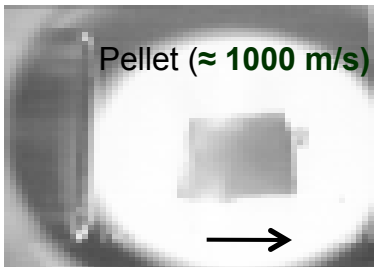

Pure T_2 (≈8 mm size)

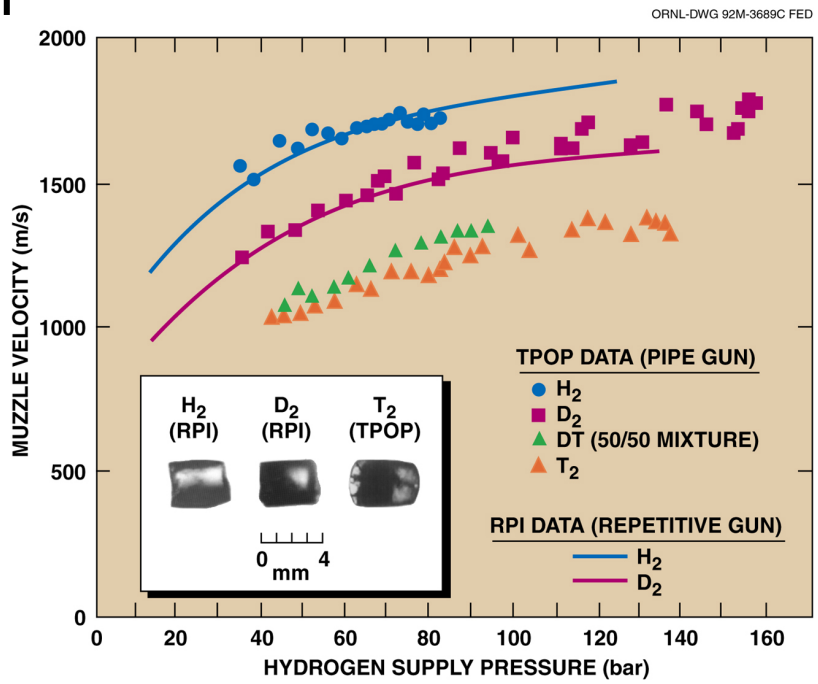

- Tritium pellet formation and acceleration were found to be readily achievable with present technology (beta decay to ^3He and associated heating did not cause any notable operating issues)
- Tritium Systems Test Assembly (TSTA) is now shut down, and the only U.S. fusion tritium facility is at Idaho National Laboratory (INL) with very limited capability (< 16 kCi)
- Pellets with high T_2 concentration (up to 90%) are envisioned for fueling ITER using the isotopic tailoring scheme
  - T_2 rich pellets combined with D_2 gas puffing (Gouge et al., *Fusion Tech.* 1995)

Contents

1. Introduction
2. History of R&D support at ORNL
3. Basic Design and Operating Parameters
4. Pellet Injector Development
5. Summary and Conclusions

Pellet Fueling Requirements & Pellet Injector Design Parameters for ITER

Parameter	Value
Plasma density <n>	$0.5–1.2 \times 10^{20}$ m^{-3}
Fuel isotope (pellet)	H_2, D_2, D-T, T_2 (90% T/10% D)
Maximum pellet fueling rate H_2, D_2, and DT T_2 (90% T/10% D) Impurity	 120 Pa-m^3/s (~1000 torr-L/s) 110 Pa-m^3/s 10 Pa-m^3/s
Pulse length	3000 s
Pellet size (nominal)	3 and 5 mm diameter 1.25 and 6×10^{20} atoms $\Delta n/n$ ~ 1.3% and 6.6%
Maximum injection frequency Core fueling Edge fueling for ELM control Impurity injection	 16 Hz 16 Hz 10 Hz
Pellet speed Reference Maximum	 300 m/s 500 m/s
Number of injectors	2 initially (up to 6 for D-T phase)

Pellets Will Be Injected Into ITER Plasmas Via Curved Guide Tubes Routed Through Divertor Ports

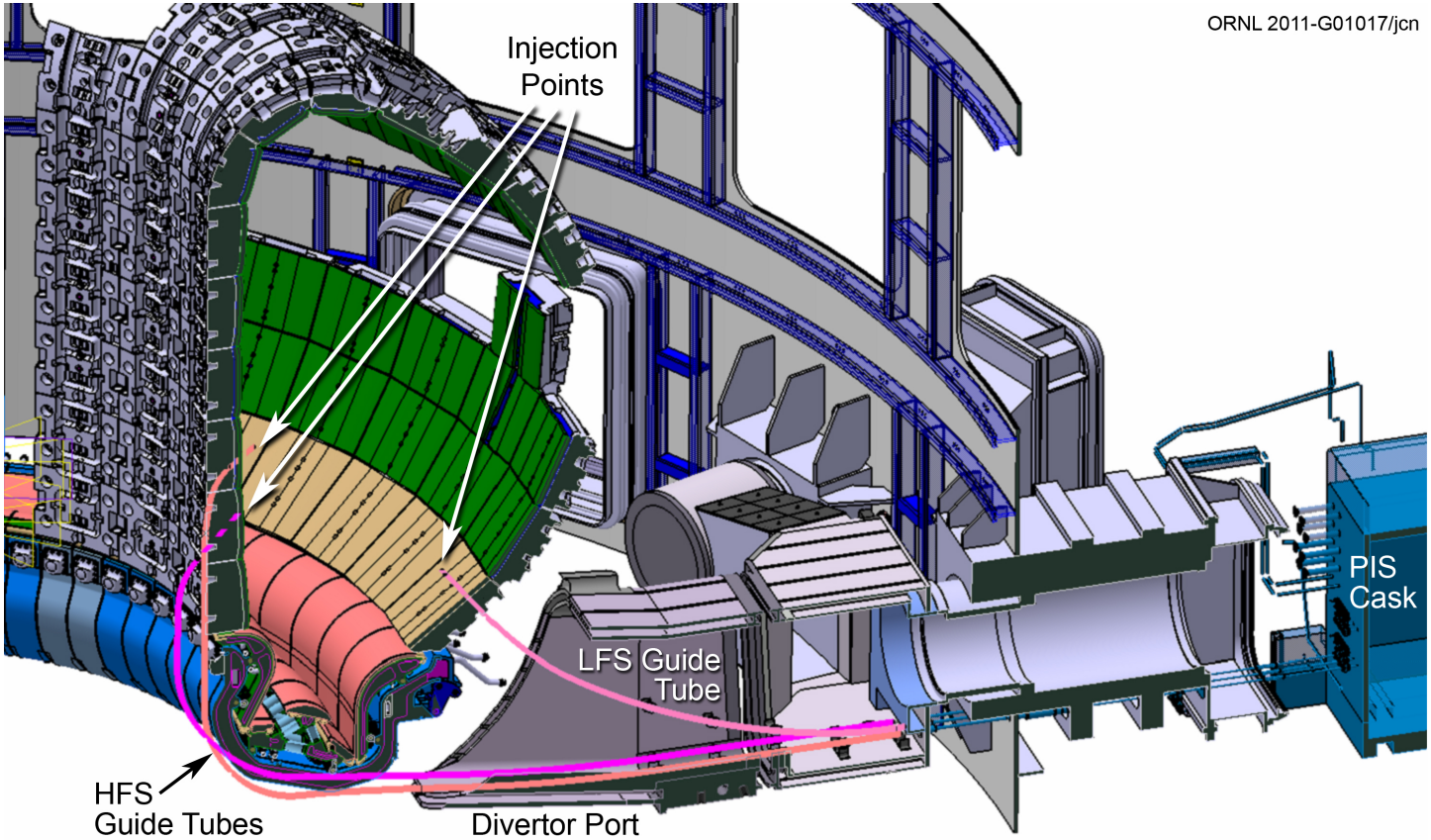

- Two HFS (inner wall) curved guide tubes for core fueling + other (upper and lower)
- One LFS (outer wall) curved guide tube for ELM pacing + other
- Three divertor ports will be equipped like this (total of nine guide tubes)
- Pellet injector systems (PIS) will be housed in metal confinement casks (2 initially with 1 injector in each)

Layout of Pellet Injection System in Confinement Cask

Plan View

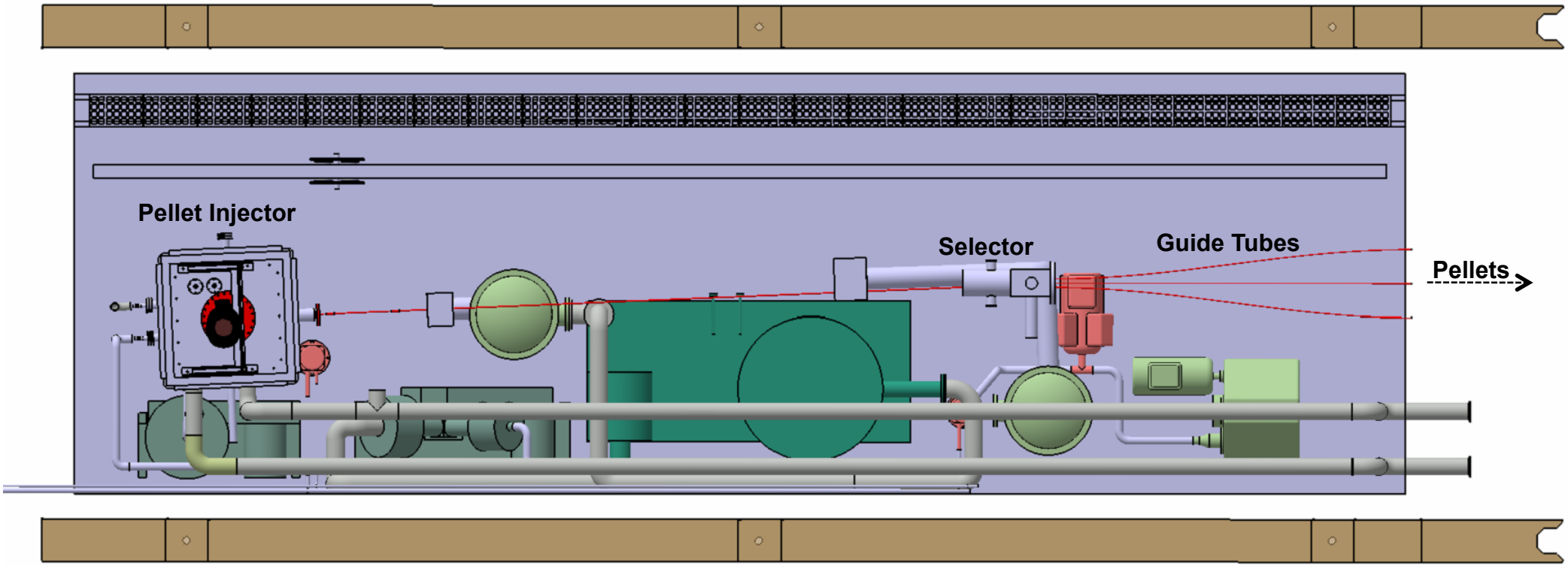

- Two injectors are to be provided for ITER at the machine startup; each is to be housed in a cask
- Each cask is a metal box ~6.5 m long x 2.5 m wide x 3.5 m tall
- Casks will be moved into place at divertor ports by a transporter and connected to the guide tubes
- Cask will act as a tritium boundary and thus will require suiting up by personnel to enter for pellet injector maintenance (after D-T operations commence)

Casks Are Designed to Accommodate Two Pellet Injectors

Plan View

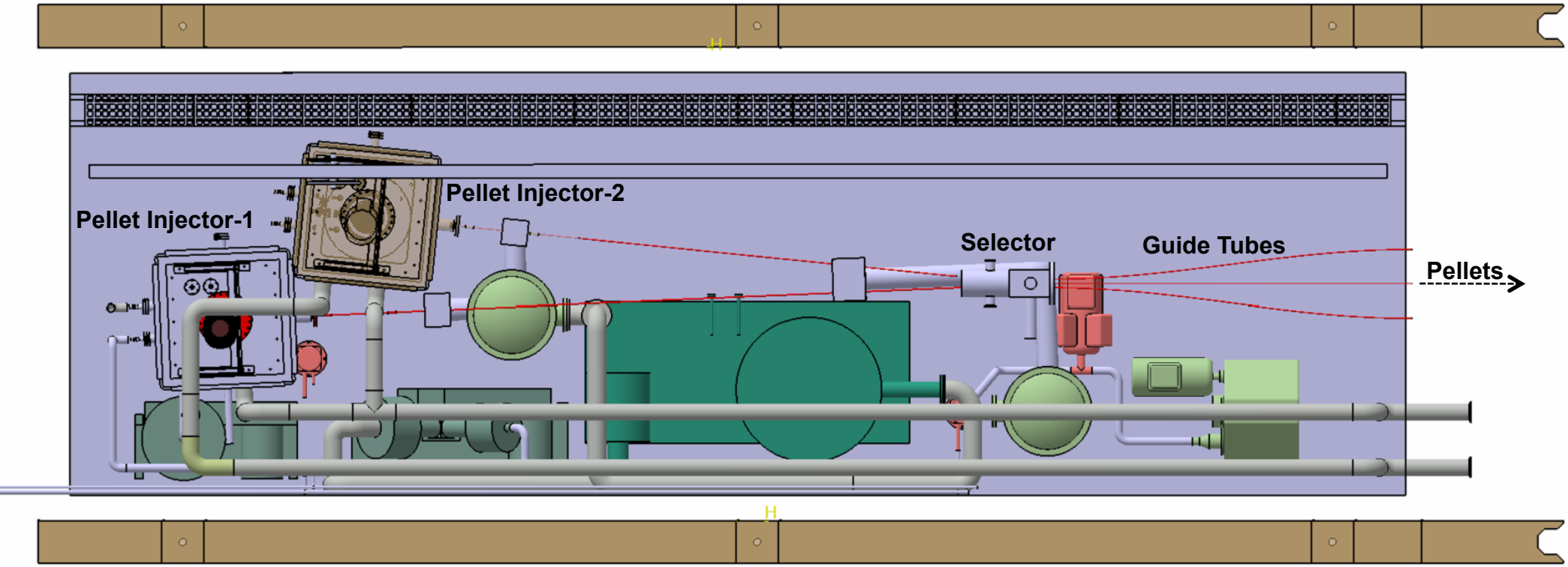

- Original two casks provides the capability to upgrade to four pellet injectors
- Third cask will be required for upgrade to full complement of six pellet injectors that is tentatively planned for D-T operations
- Selector apparatuses will be used to actively direct the flight of the pellets to any of the three ITER guide tubes (prototype of this device will be designed and tested in the laboratory)

Schematic of Pellet Injector – Screw Extruder Feed with Pneumatic Acceleration

Ar/Ne/N_2
0.9 bar
Impurity

Fuel
D_2/T_2
0.9 bar

D_2
0.9 bar

Guard Vacuum

1-3 bar

P

Vextr = 25 cm ^{3}
~ 40 bar-L

30 bar

V3

ITER
Guide Tube

Selector

Q2 = 30 mbar-L/s

QE = 250 mbar-L/s

Q1 = 300 mbar-L/s

2nd stage
ballast tank
P ~ 0.1 mbar

V2

500 L/s

3 L/s

30 bar

Compressor

6000
m^3/h

V1

120
m^3/h

6000
m^3/h

1000 L/s

180
m^3/h

300 mbar-L/s at ~1
bar

ITER Vacuum

PIS Cask

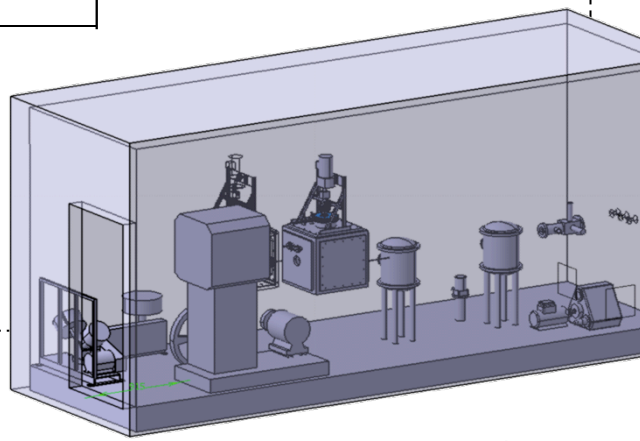

Contents

1. Introduction
2. History of R&D support at ORNL
3. Basic Design and Operating Parameters
4. Pellet Injector Development
5. Summary and Conclusions

Development Items for ITER Pellet Injection System

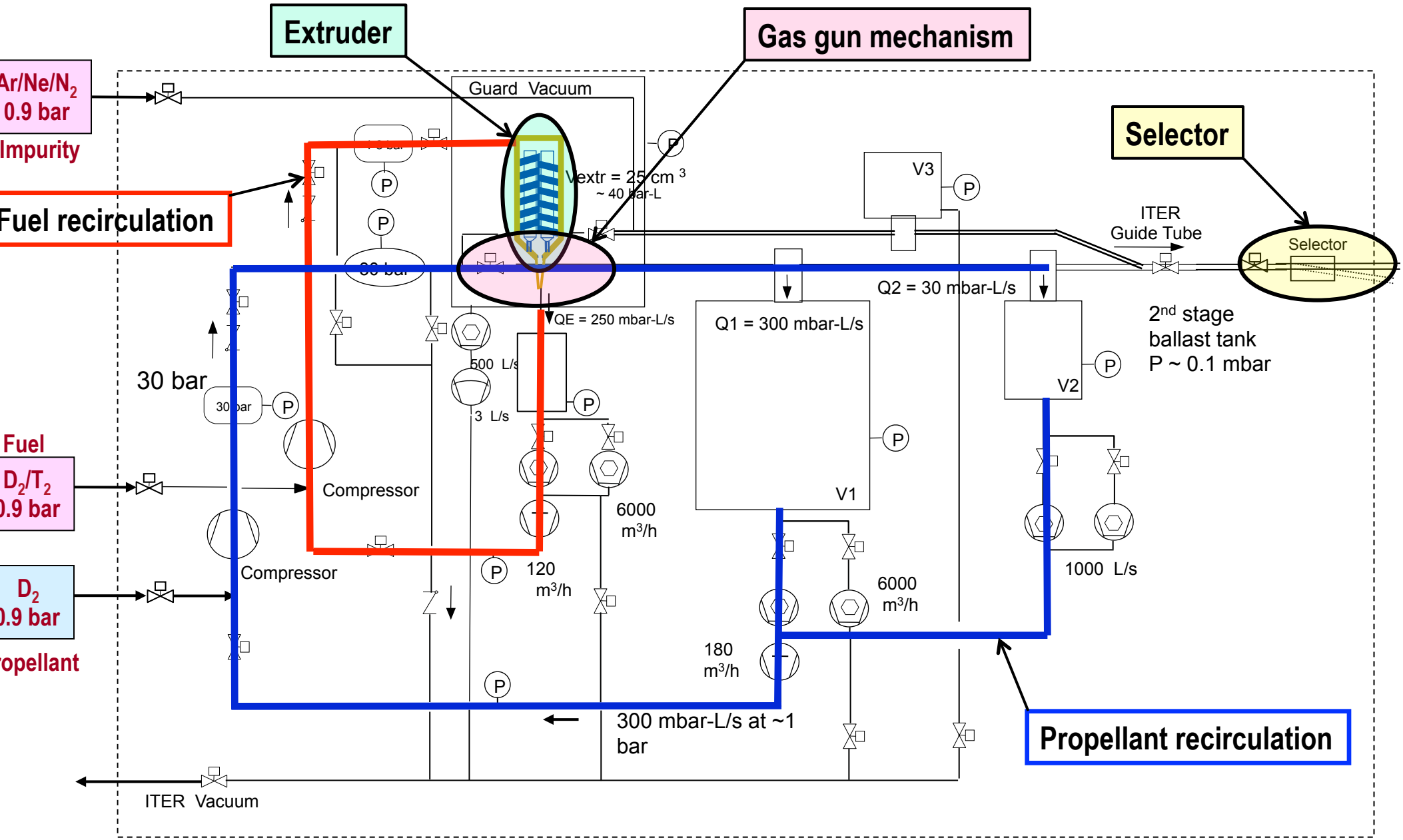

High Steady-State Throughputs of Solid Hydrogen Are Required for Fueling in ITER – Challenging Task (1500 mm^3/s per injector)

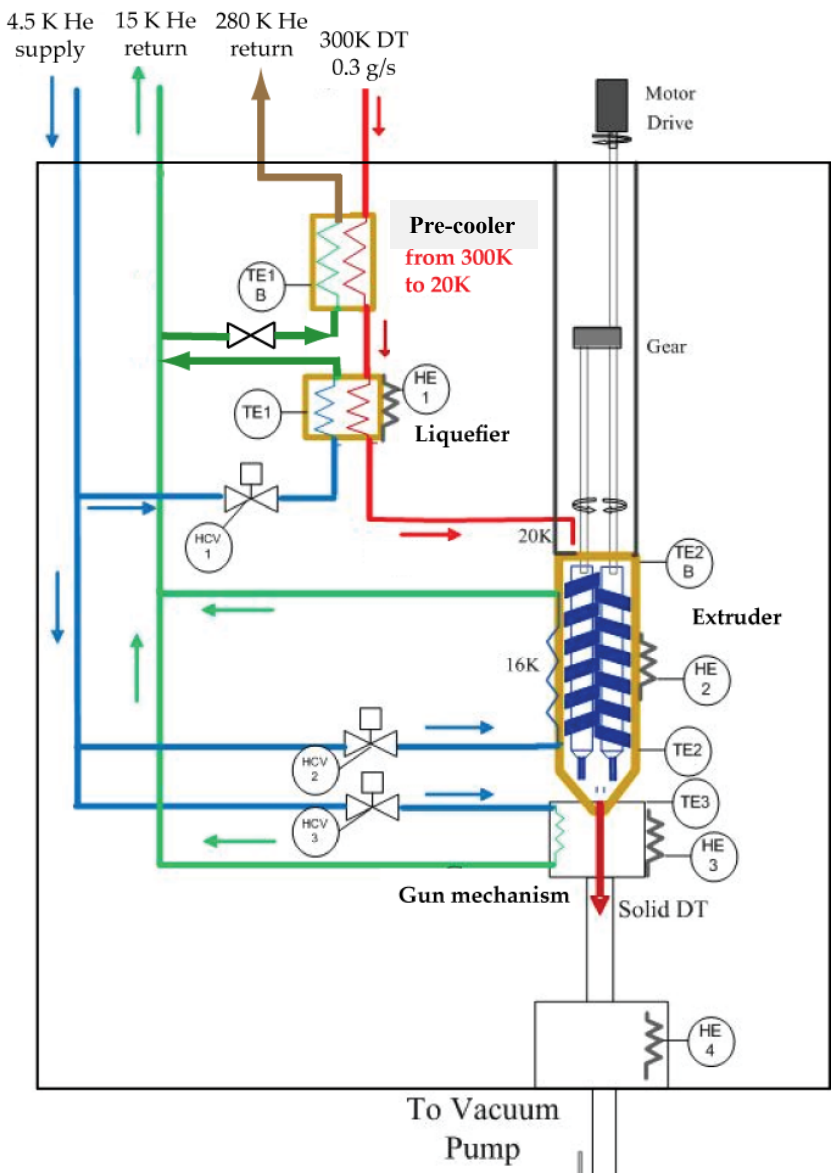

- Single-screw extruders developed by Viniar et al. of PELIN (Russia) have operated at flow rates approaching the design value
- Twin-screw extruder is being developed for continuous D_2 and T_2 ice formation for the ITER pellet injection system
  - A pre-cooler and liquefier uses the ITER supercritical 4.5 K He (4 bar) to pre-cool and liquefy the fuel gas
  - Liquid fuel would enter the extruder kept at the triple point temperature (~20 K) on top and cooled to ~14 K at the nozzle end
  - Volume of extruder would be 25 cm^3 and hold ~7.7 g T_2 (80,000 Ci = 4000 Pa-m^3 = 40 bar-L); design flow of 1500 mm^3/s can be achieved at ~ 3 rpm
  - Design flow takes into account an expected mass loss approaching ~50% from the pellet formation, acceleration, and transport processes
- Existing technologies appear capable of forming and accelerating the pellets as rapidly as the extruders can provide the material (10-25 Hz or so)

Development of Twin-Screw Extruder at ORNL

- Twin-screw extruders are routinely and reliably used in the plastics and food industries and operate with positive displacement, without relying on wall friction to move the extrusion through the screws as is the case with a single-screw extruder
- First-generation prototype has been successfully built and tested with D_2 at throughput of ~20% of ITER requirements (for up to 20 min durations)
- The prototype extruder uses cryo-coolers to liquefy/ solidify the incoming fueling gas that is pre-cooled with a liquid nitrogen heat exchanger
- Assembly of new components for second-generation prototype has begun in the laboratory; it includes upgrades in the powertrain, torque handling and measurement, and thermal management; and tests will soon be conducted to characterize the quality, duration, and rate of supplied solid D_2
- New R&D task to develop pellet injector prototype is underway; gas gun accelerator and propellant gas recovery scheme will be added

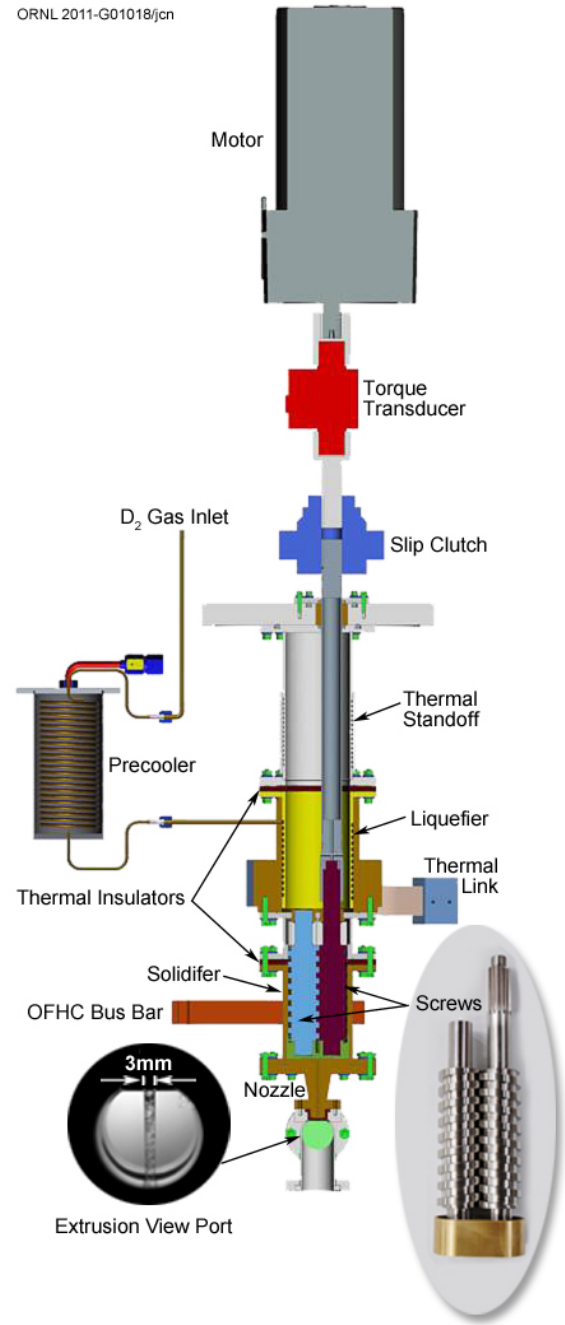

Prototype Pellet Injector Will Be Used for Component/System Testing

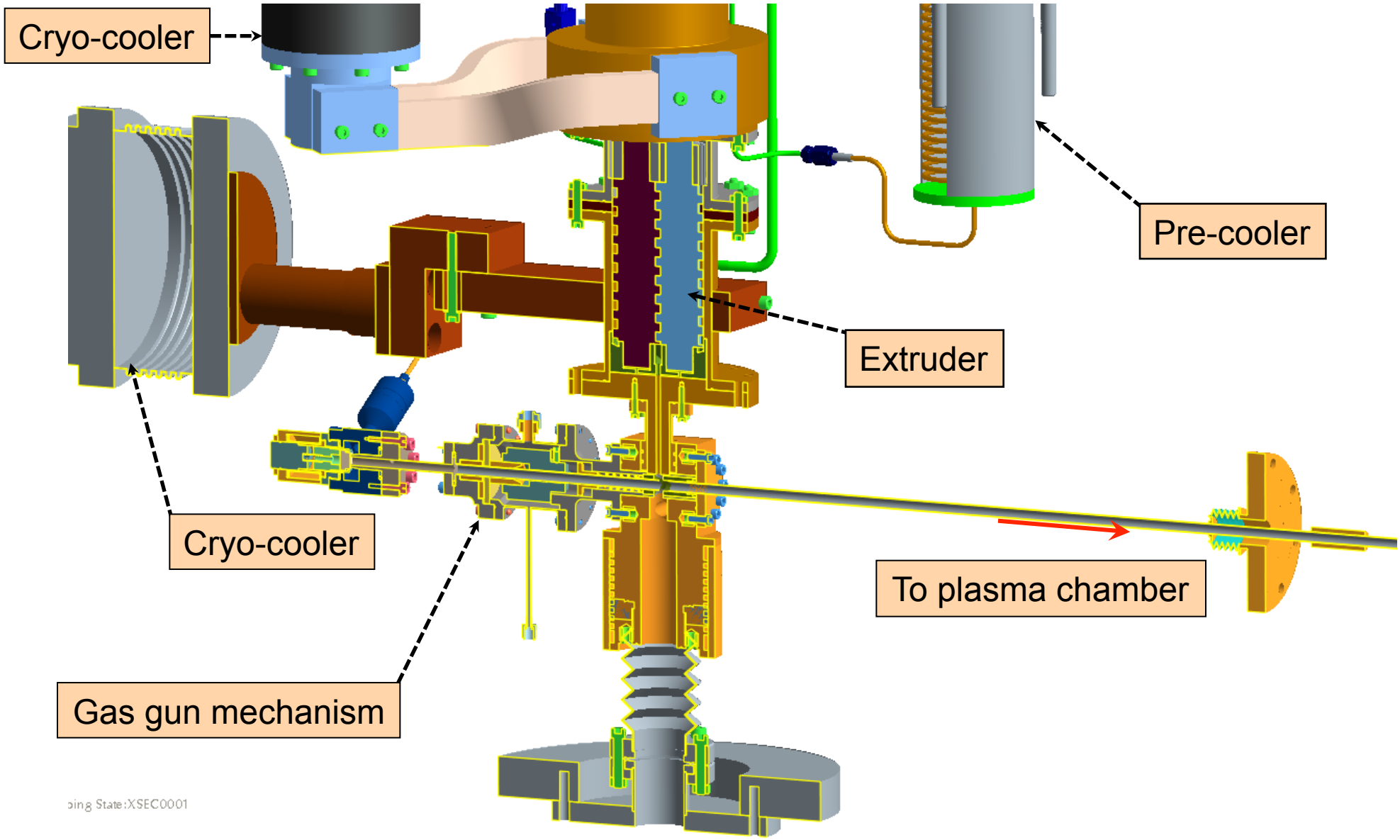

Two Prototype Microwave Cavities for ITER Pellet Injection System Have Been Designed, Built, and Tested at ORNL

- Key diagnostic for ITER pellet injectors will be microwave cavity mass detectors
  - Prototypes operate in the TM01 mode at 2.69 GHz and consist of aluminum (type 6061 T6) cylinders (ID=8.54 cm and L=9.63 cm)
  - Each cavity has a quality factor, *Q*, of >5000. *Q* of each cavity was adjusted to match each other to within 1%, and the detection electronics matched each other to within less than 5% variation
  - Cavities operate in vacuum and are mounted inside a standard vacuum cross (four 20.3-cm conflat flanges connected with 15.2-cm OD tubing)
  - Semi-rigid coaxial cable with a silicon dioxide dielectric can be used for the connections inside vacuum, thus making the prototype cavities fully T_2 compatible
- These units will provide accurate pellet mass and speed measurements and will be used for testing future ITER pellet injector prototypes (including final system)

ORNL 2011-G01019/chj

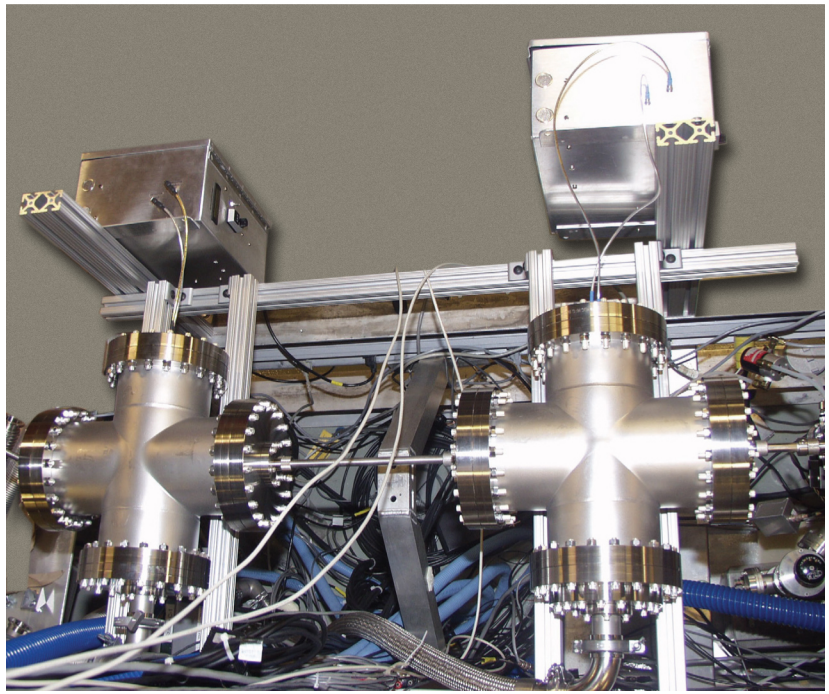

Set-up of two ITER prototype microwave cavities for calibration tests in the lab (pellets travel right to left)

Calibration Data for ITER Prototype Microwave Cavities

Typical Test Shot

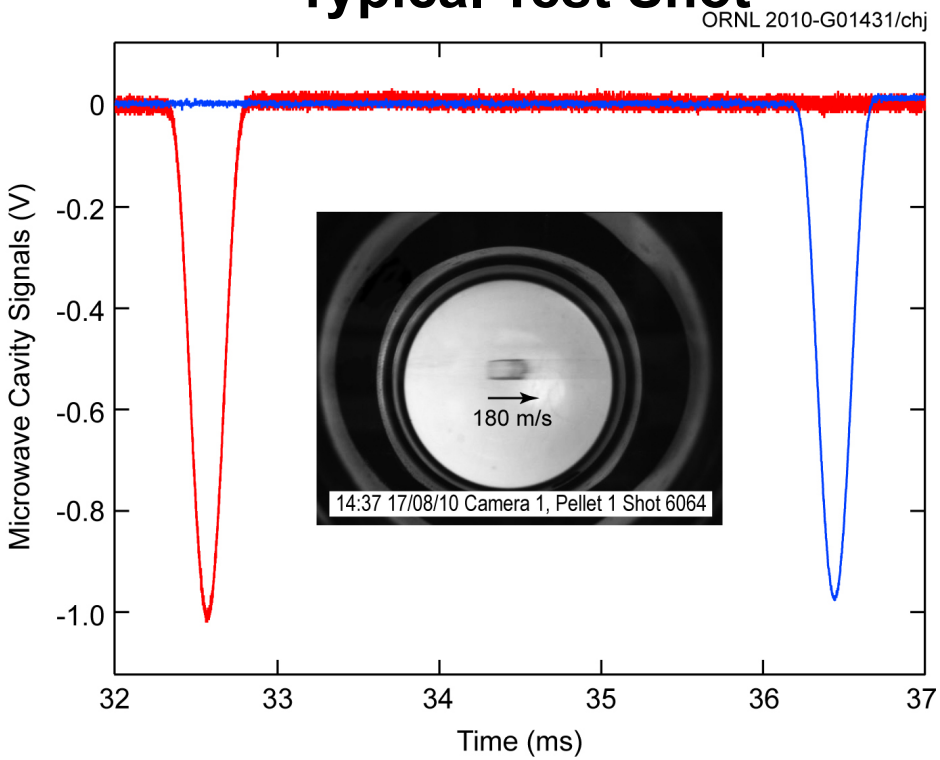

Cross Calibration

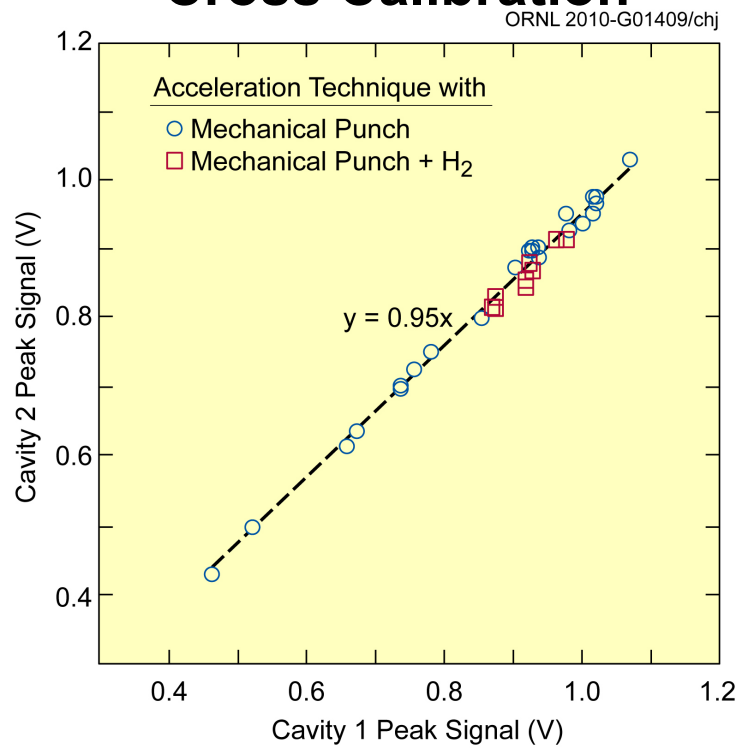

- D_2 pellets of nominal 2.7 mm diameter were shot through the cavities (~size for ELM pacing)
- Cavities were closely coupled so that the same mass would pass through both
- Pellet size was varied by over a factor of 2 by varying the pellet length
- If one cavity is placed at the entrance to a curved test tube and one is placed at the downstream outlet, the cross calibration curve can be used to accurately determine the mass loss through the test tube
- Similar calibration will be made with nominal 5 mm D_2 pellets in the near future, and a mock-up of the ITER upper HFS (inner wall) guide tube will be thoroughly tested in the lab (size for pellet fueling)

Mock-Up Testing of ITER Pellet Guide Tubes Have Been Carried Out

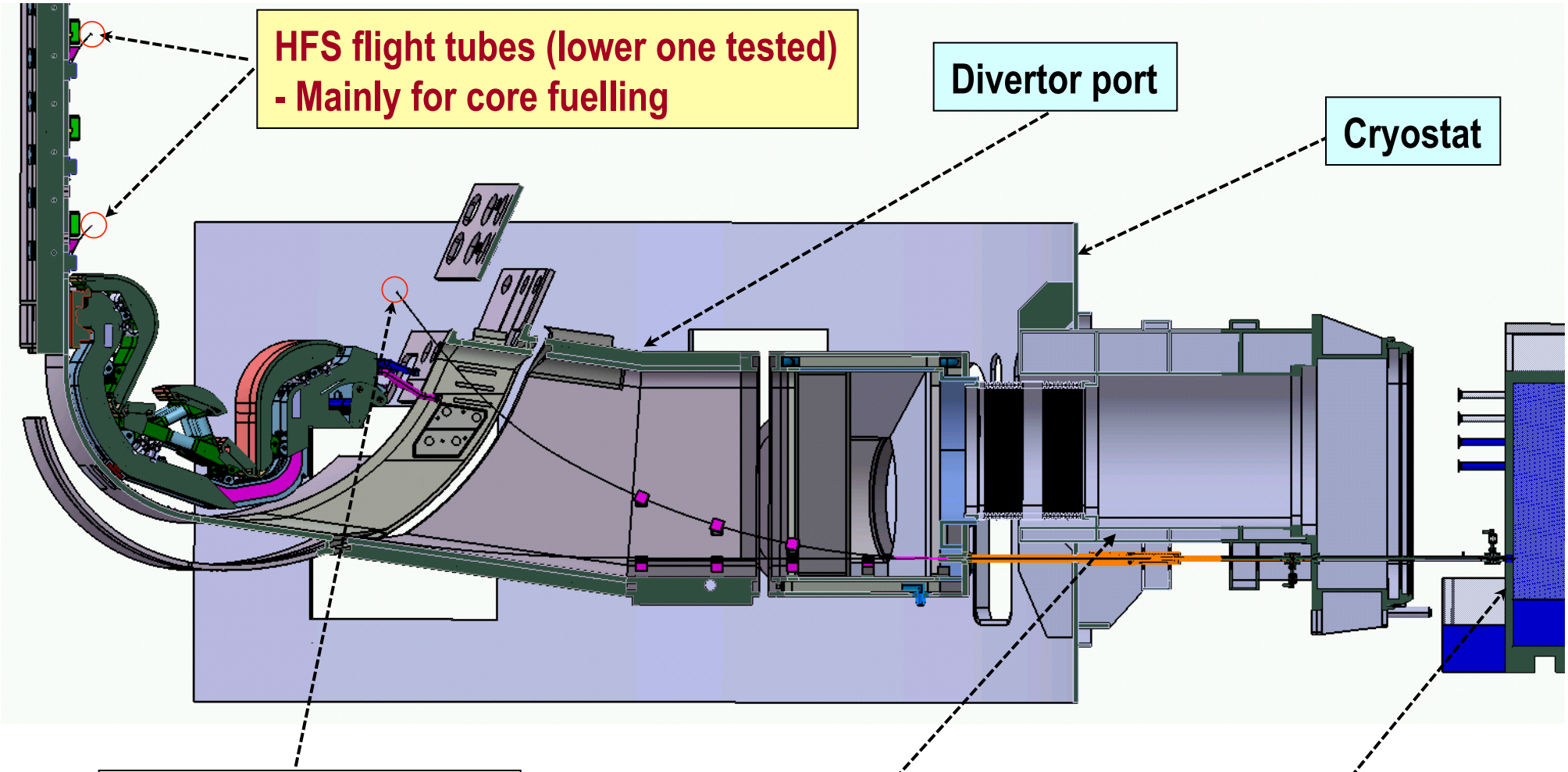

First Tests Were Carried Out with Mock-Up of ITER Lower HFS Tube

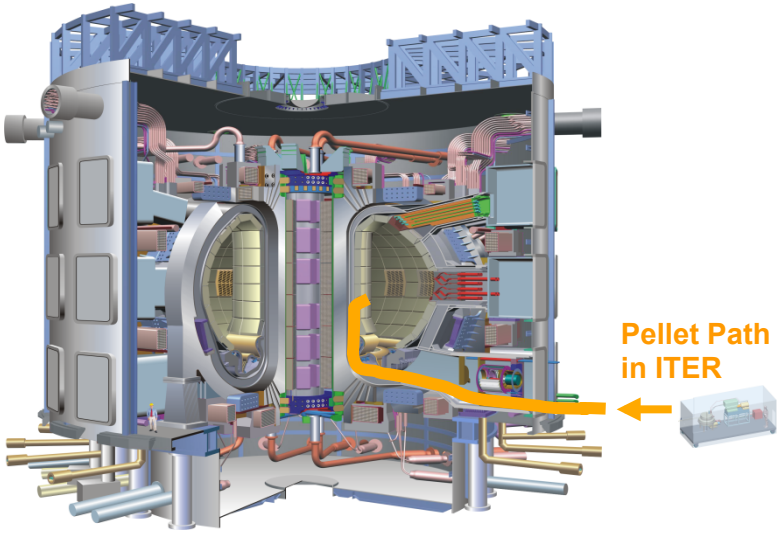

- 5.3 mm D_2 pellets (nominal diameter, L/D~1)
- Pellet speeds limited to ~300 m/s for intact pellets
- Mass loss in guide tube ~10% at speed limit
- Similar tests will soon be made with mock-up of the upper HFS (inner wall) tube; results are not expected to differ much from these

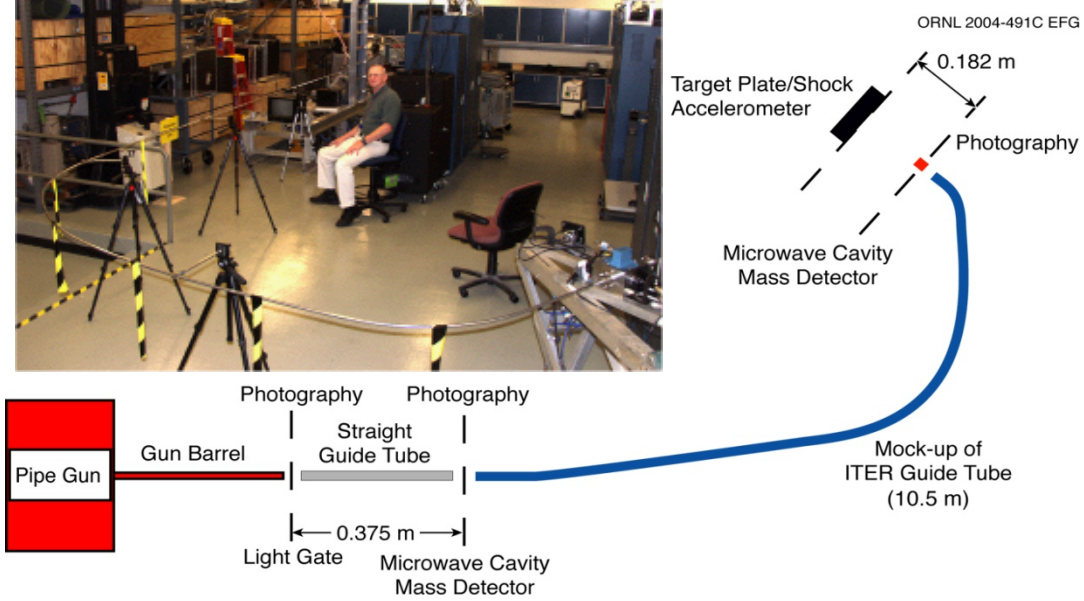

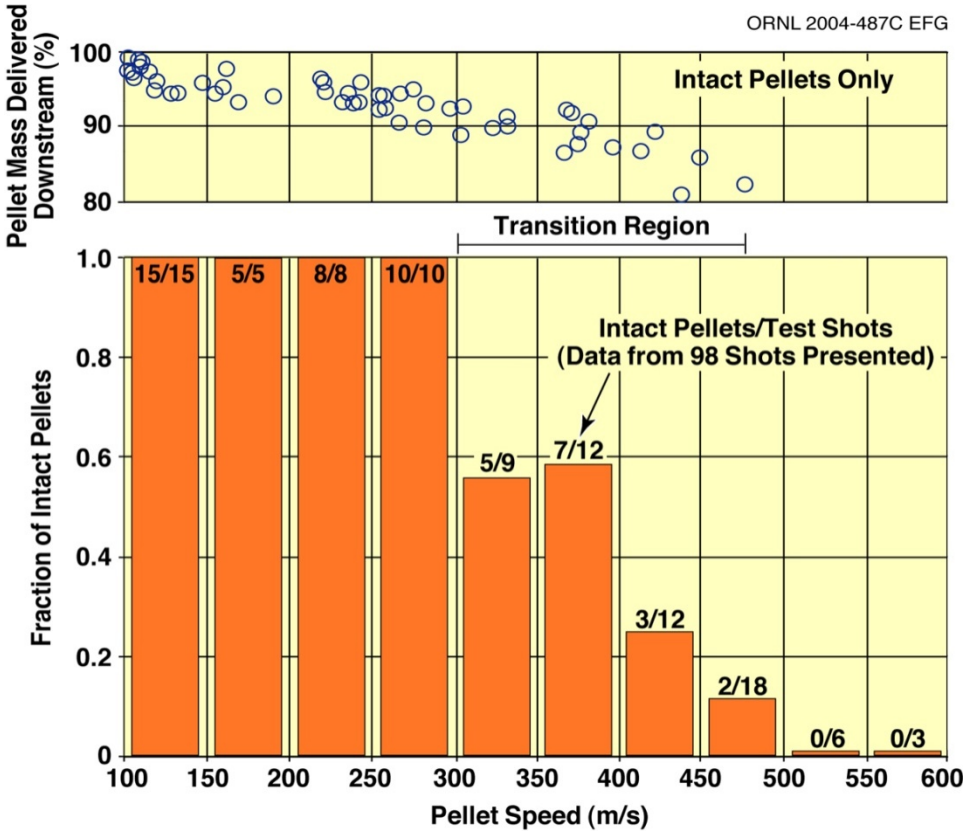

More Tests Were Made with ITER HFS Mock-Up at Elevated Pressures

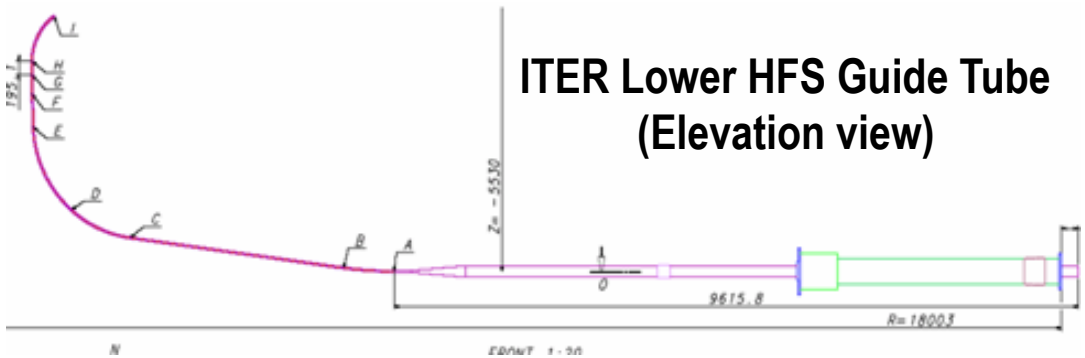

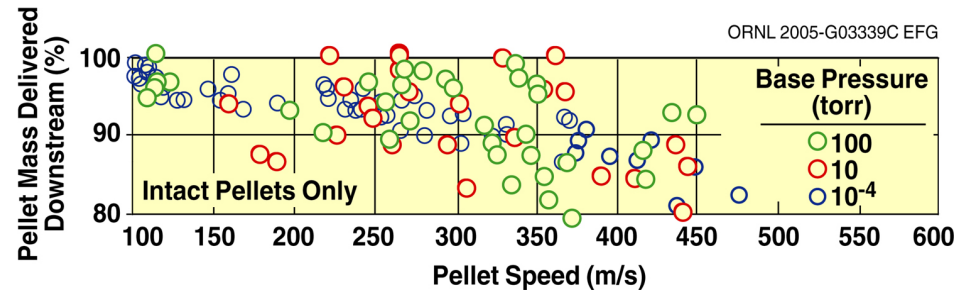

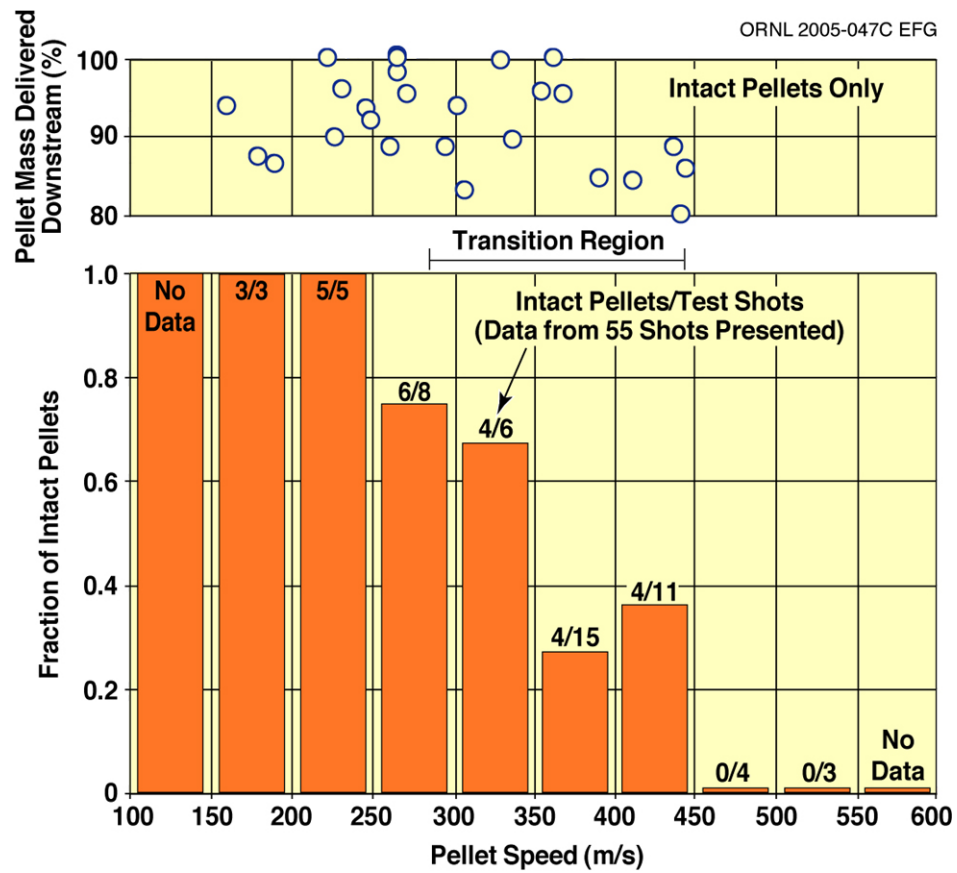

- 10-Hz pellet injection with ~10% mass loss (10 Pa-m^3/s) will lead to a ~10 mbar (1000 Pa) operating pressure in the 10-mm bore guide tube
- Tests with 5.3 mm pellets and the mock-up of ITER HFS lower tube at ~10 torr (1330 Pa) show little difference in pellet break-up and mass loss from that observed with an evacuated tube
- Additional tests were carried out with the tube pressurized to ~100 torr (13300 Pa), and the only significant difference in the results was that the pellets slowed down discernibly (10–20%) in transport through the tube

Mock-up of ITER LFS (Inner Wall) Guide Tube and Test Results

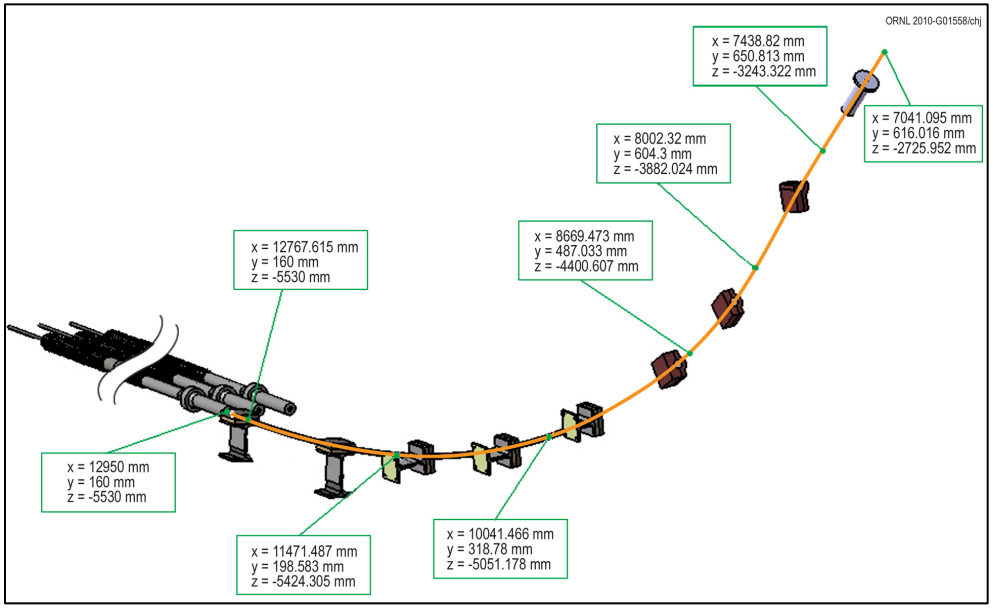

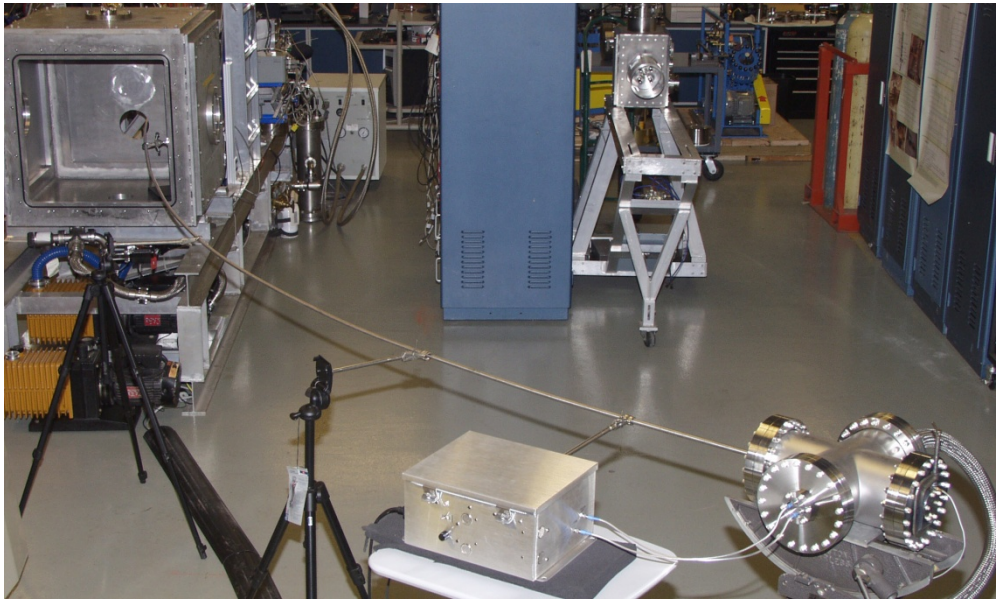

ITER LFS Guide Tube Mock-up

- 2.7 mm D_2 pellets (nominal diameter, L/D~1.3)
- ITER prototype microwave cavities used in tests
- Pellet speeds limited to ~340 m/s for intact pellets
- Mass loss in guide tube <10% at speed limit

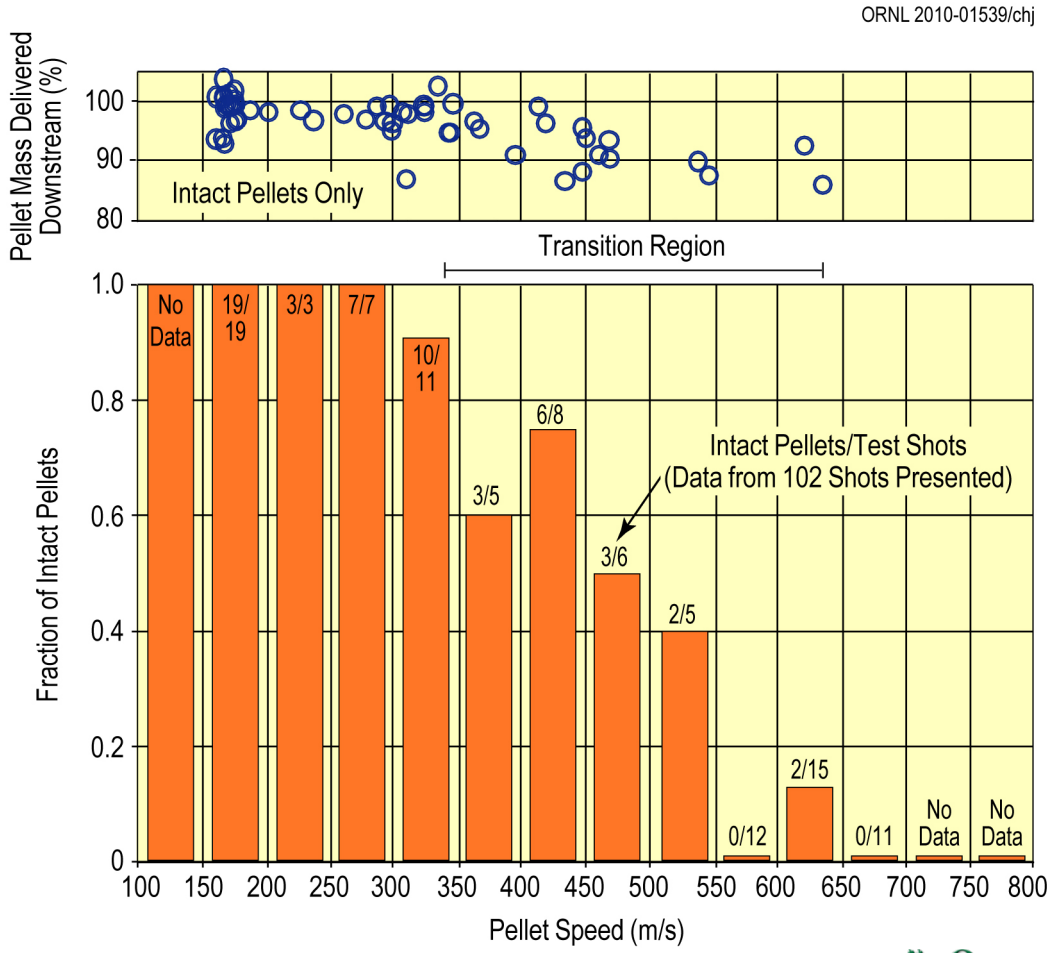

Further Analysis of Data from ITER LFS Mock-up Testing

- Some intact pellets were observed at very high speeds, including the fastest intact pellet at 635 m/s (86% mass delivered as single projectile)
- Dominant mechanism that limits pellet survivability appears to be pellet fractures from single/multiple wall collisions, as indicated by often observing multiple peaks on the microwave cavity signal
- Microwave cavity data for fractured pellets indicate that significant solid mass was typically delivered through the tube as relatively large fragments, even at the highest test speeds
  - For top plot, ~90% of the total pellet mass is delivered through the tube as solid material at 400 m/s (2 pieces of about equal size)
  - For the bottom plot, ~80% of the pellet mass was delivered as solid material at 680 m/s (four pieces of similar size)
- This suggests that enough solid material might be delivered over the entire range of pellet speeds reported here to be useful for the ELM pacing application on ITER (deep penetration not required)

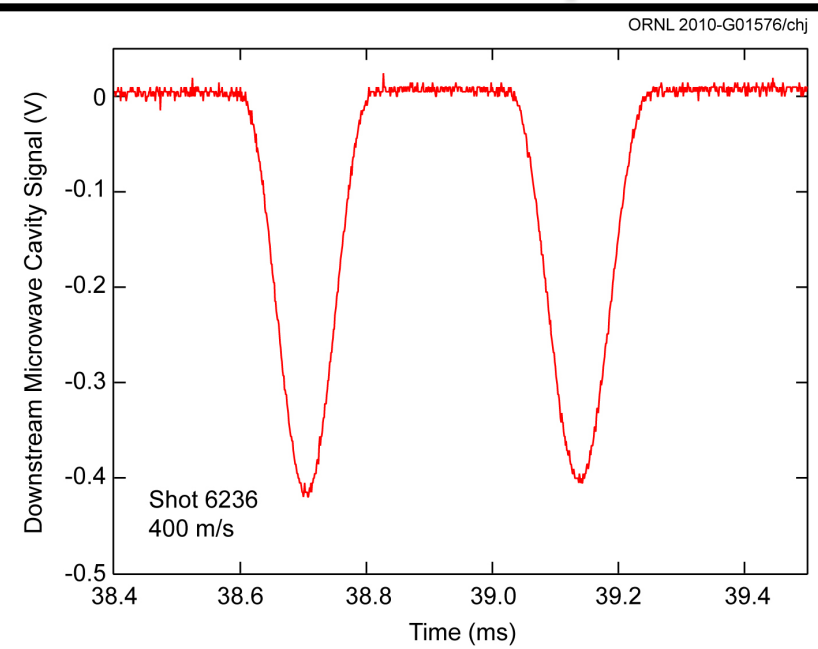

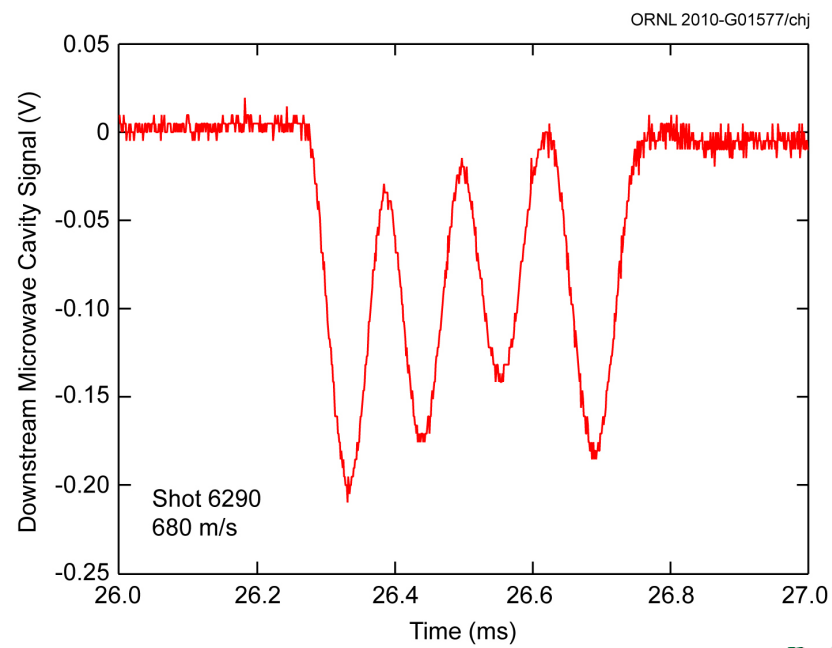

Other Development Activities for ITER Pellet Injection System

- All components will need to be evaluated as regards to T_2 compatibility and associated lifetimes in the nuclear environment of ITER
- All active components will need to be evaluated as to mechanical reliability and expected lifetimes; this will undoubtedly include some lifetime studies
- It will be necessary to refine the designs so that active components can be easily replaced at the end of normal lifetimes or in case of premature failures
- Development of systems in the lab for collection and recycling of low-pressure pellet feed gas and high-pressure propellant gas are also planned

Related R&D at ORNL in Support of ITER

- Investigating alternative techniques for injecting massive quantities of gas for disruption mitigation
  - Large (~16 mm) D_2 or Ne pellet is made and shot into a special double-strike target that shatters the pellet near the vessel inner wall before entering the plasma
  - Prototype system was developed at ORNL and has been installed on DIII-D and used successfully in disruption mitigation experiments
  - Multiple units could be part of a reliable disruption mitigation system for ITER

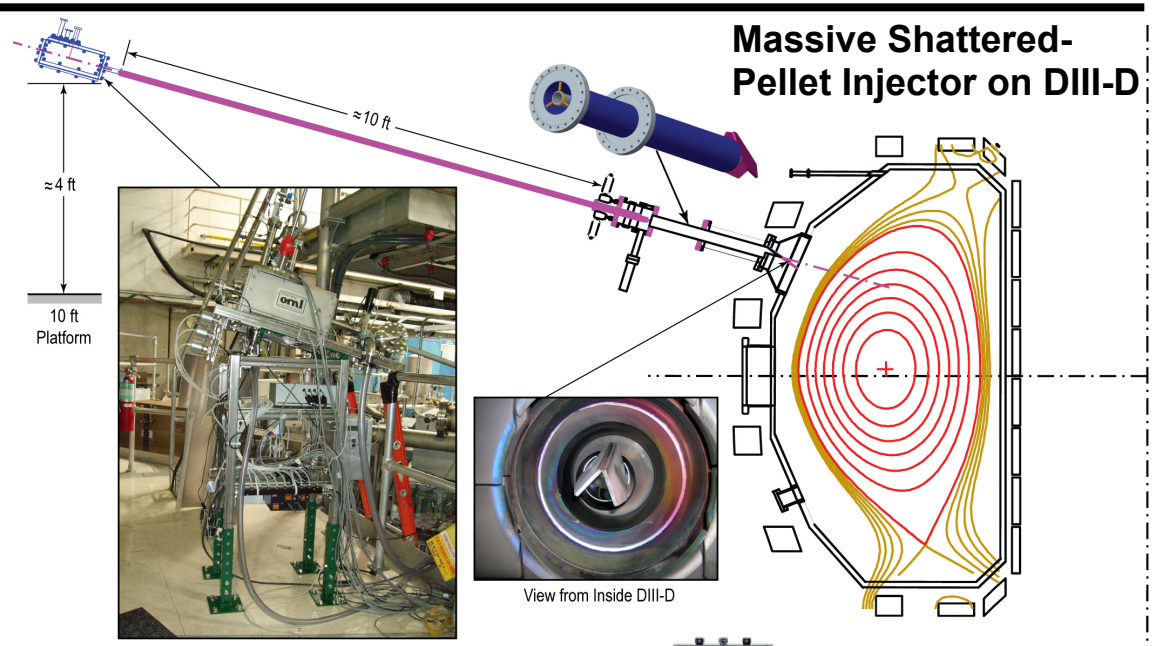

- Specialized cryo-pump is being developed for the ITER vacuum roughing pump system
  - Pumps hydrogen exhaust gases from the torus pumps and compress them to a higher pressure by regeneration for pumping to the tritium exhaust processing facility for separation/purification
  - Several of these pumps will operate in parallel and are staged to maintain continuous pumping and regeneration during plasma operation

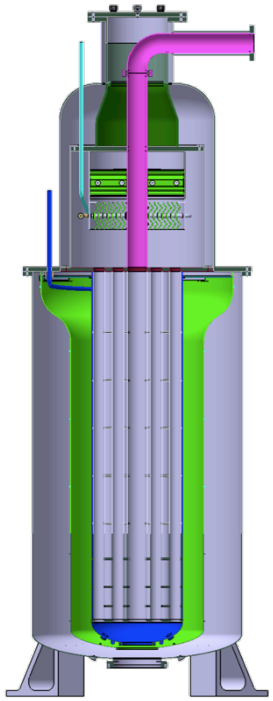

Cryogenic Viscous Compressor (CVC)

Contents

1. Introduction
2. History of R&D support at ORNL
3. Basic Design and Operating Parameters
4. Pellet Injector Development
5. Summary and Conclusions

Summary and Conclusions

- Significant progress has been made over the last several years in the development of the ITER pellet injection system
- Providing the large continuous throughputs of solid hydrogen is perhaps the most challenging technical task; however, both single-screw and twin-screw extruders are likely to be able to meet the volumetric flow requirement of ~1500 mm^3/s per injector
- One-fifth scale ITER prototype twin-screw extruder and integrated pellet injector test facility are being developed at ORNL to evaluate and optimize the operations and performance
- Design of a full-scale prototype will follow, with fabrication and testing for design verification
- Two ITER prototype microwave cavities have been constructed, fully tested, and are available for operating with any future injector prototypes, including a full-scale ITER pellet injector (these units will provide accurate pellet mass and speed measurements)
- Extensive testing with mock-ups of the ITER pellet guide tubes have shown that reliable pellet fueling should be expected as long as the pellet speeds do not exceed ~300 m/s and that pellets with adequate mass for ELM pacing can be delivered at even higher speeds (up to ~500 m/s or greater)
- Developments are on track to produce a full-scale ITER prototype injector within a few years