Next Generation Ion Sources for the SNS

R.F. Welton, J. Carmichael, N. J. Desai, R.H. Goulding, B. Han, Y. Kang, S.N. Murray, T. Pennisi , K. G. Potter, M. Santana, and M.P. Stockli

1. Description and status of the SNS facility
2. Performance of the LBNL source
3. The SNS external antenna H^- source
    1. Testing history
    2. Antenna development
    3. Cooling jacket development
    4. Improving magnetic confinement
    5. Improving plasma ignition
4. Future directions – Next-generation extraction systems and helicon plasma generation

FEST Seminar, June 2010,
FED ORNL and
APT Seminar, Dec 2009
Fermilab

Managed by UT-Battelle
for the Department of Energy

OAK RIDGE National Laboratory

SNS Accelerator Complex

Front-End:
Produce a 1-msec long, chopped, H- beam

1 GeV LINAC

Accumulator Ring:
Compress 1 msec long pulse to 700 nsec

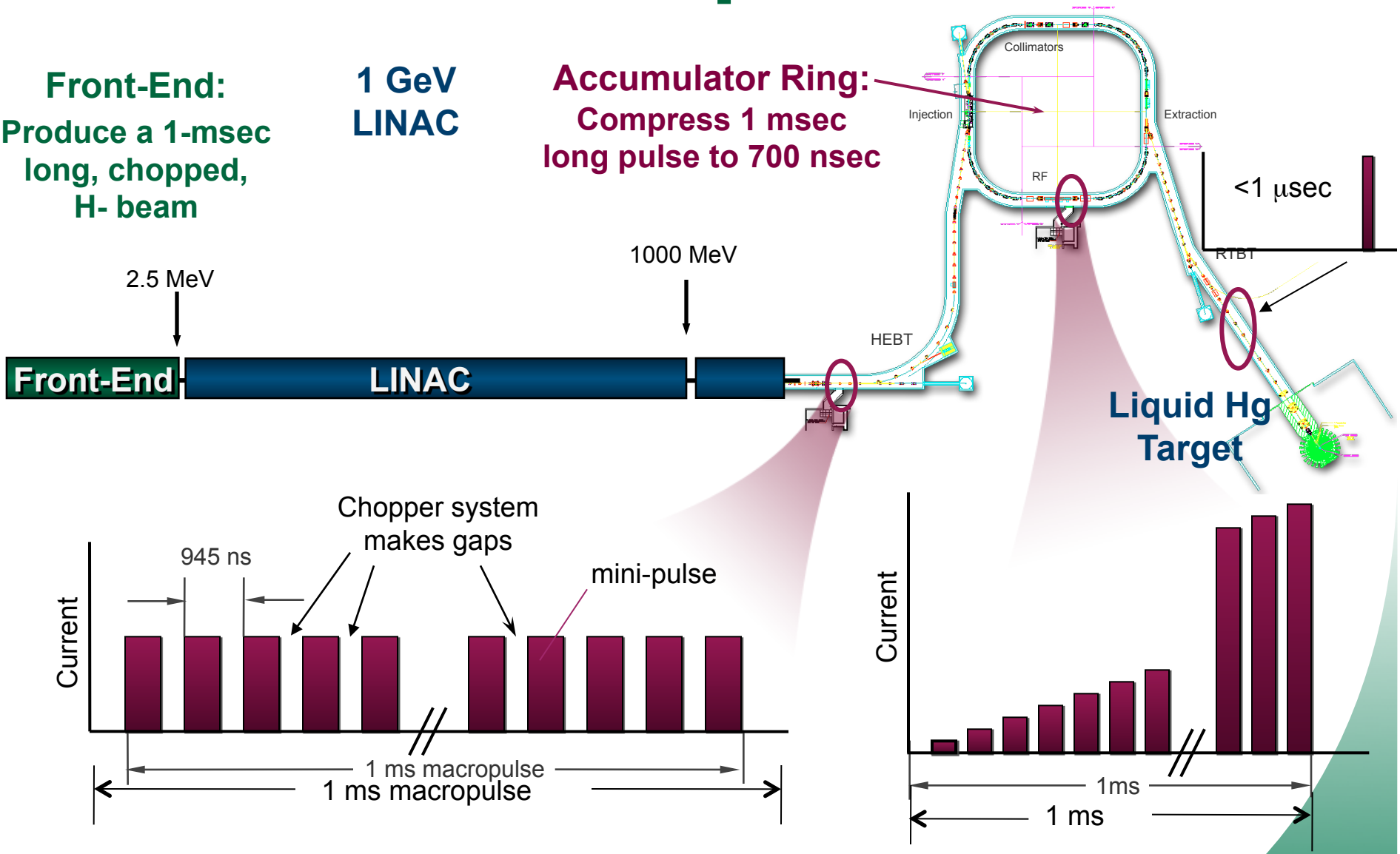

Courtesy of J. Galambos

OAK RIDGE National Laboratory

SNS Achieves 1 MW Beam Operation

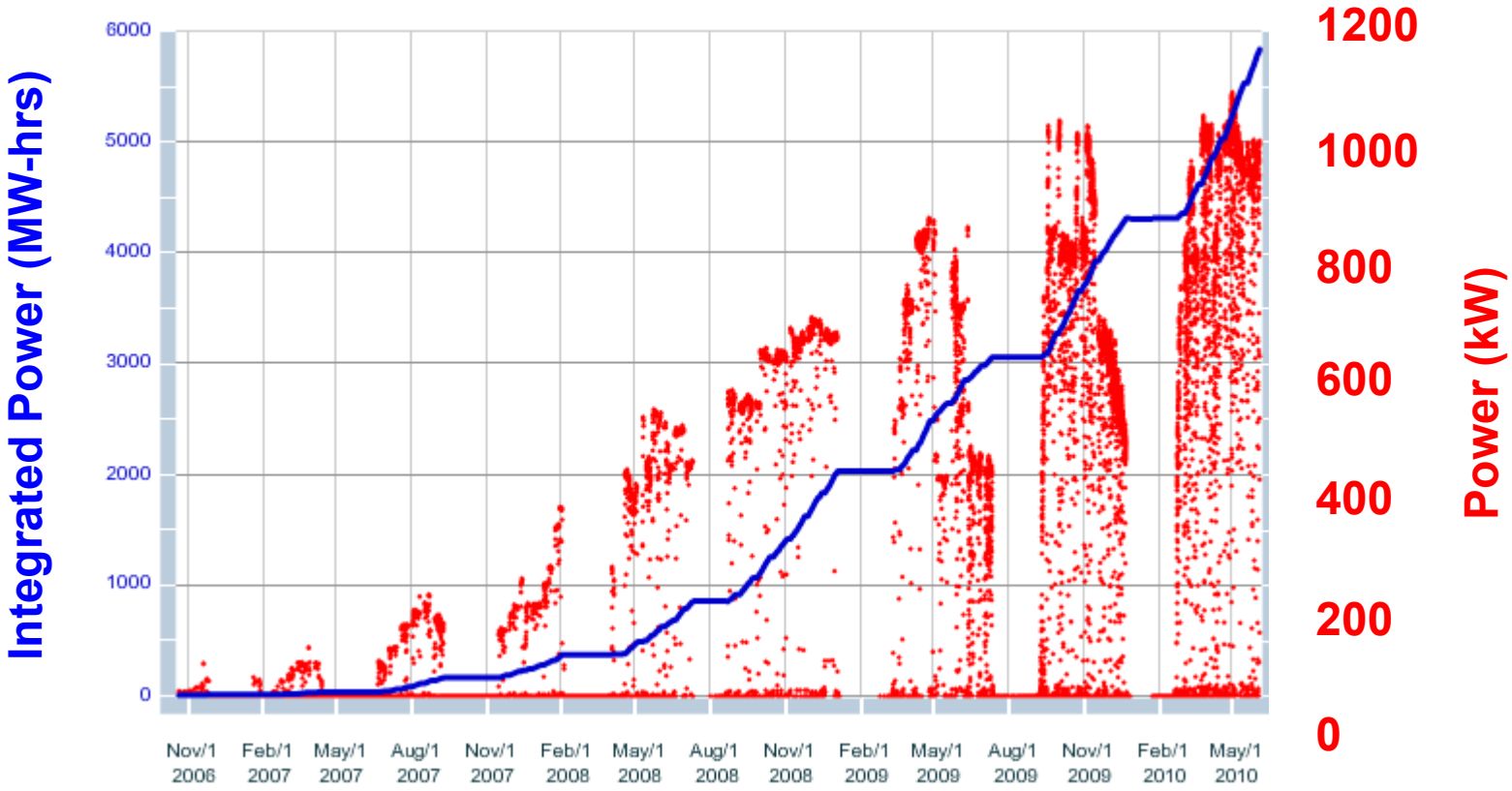

- **Power Ramp-up since start of operations in October 2006**
- **SNS achieves 1 MW operation on Sept 18, 2009**
- **Beam power is projected to reach 1.2 MW by 2010 and 1.4 MW by 2011**

Courtesy of J. Galambos

OAK RIDGE National Laboratory

FY09 Metrics Data – SNS operations group

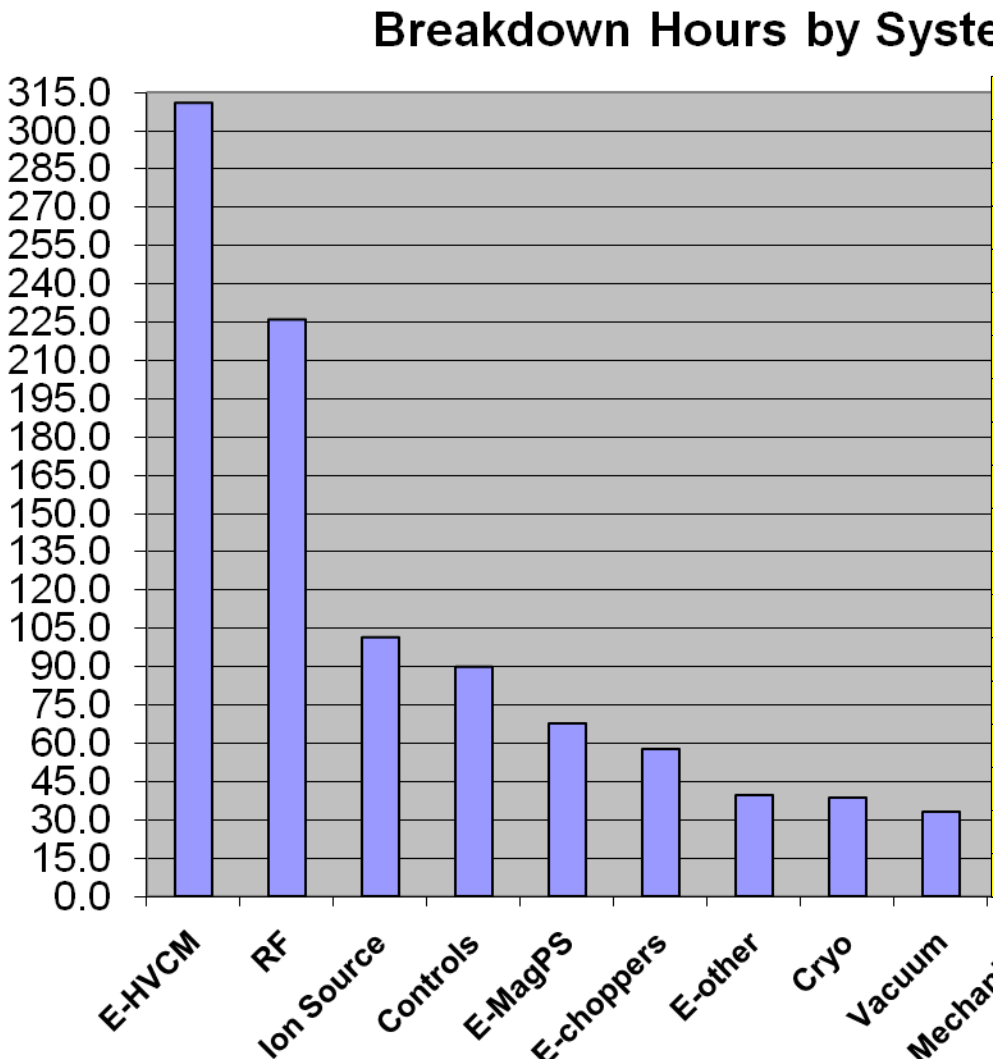

Group	Hours	% of breakdown total
E-HVCM	310.8	27.9
RF	226.4	20.3
Ion Source	101.8	9.1
Controls	90.4	8.1
E-MagPS	68.1	6.1
E-choppers	58.3	5.2
E-other	40.0	3.6
Cryo	38.9	3.5
Vacuum	33.7	3.0
Mechanical	31.7	2.8
Cooling	27.5	2.5
Prot. Sys.	26.4	2.4
AP	20.2	1.8
BI	16.2	1.5
Target	12.0	1.1
Ops	6.6	0.6
ESH/Rad. Safety	2.0	0.2
Misc.	1.8	0.2

- **Overall availability in FY09 has been ~80% (4526h / 5643h) AP+NP**
- **In FY09 ion source downtime is higher than usual due to testing of the external antenna source (46h-contribution).**

Courtesy of J. Kozak and S. Passmore

Future SNS Project Plans

- **Power Upgrade Project**
  - **Energy upgrade (1 to 1.3 GeV) + associated source current upgrades (power increase from 1.44 to 2-3 MW)**
  - **Linac current 38 → 59mA with present duty-factor**
  - **CD-1 approved**

- **Second Target Station**
  - **Add second target station (possibly long pulse)**
  - **CD-0 approved**

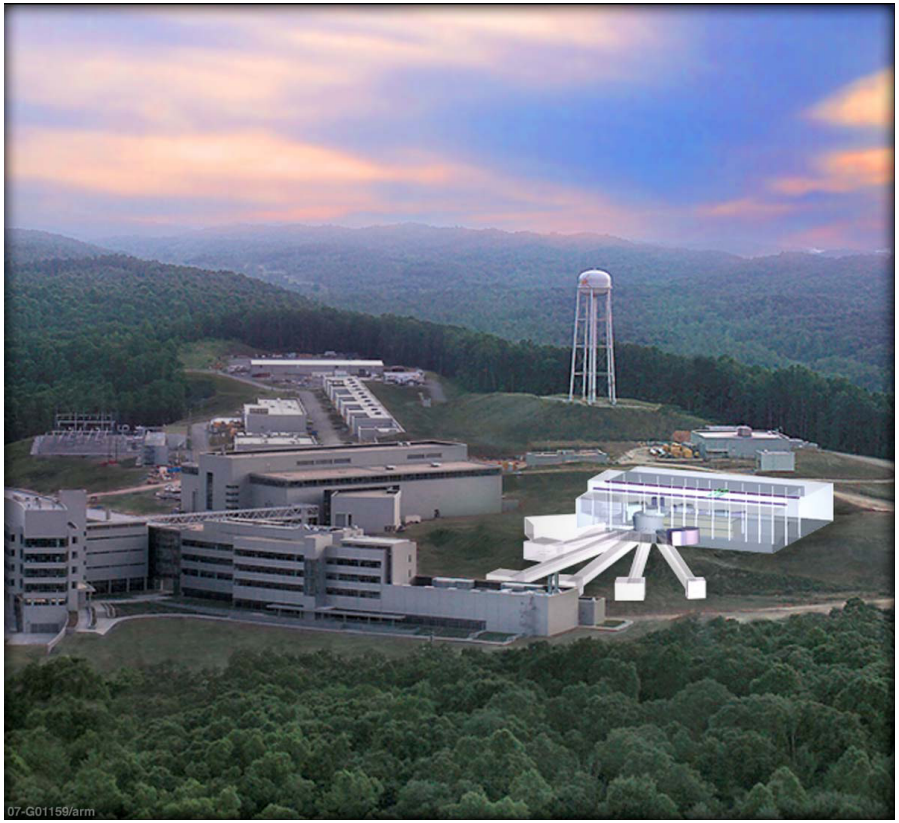

Courtesy of J. Galambos

OAK RIDGE National Laboratory

The SNS Baseline Ion Source and LEBT

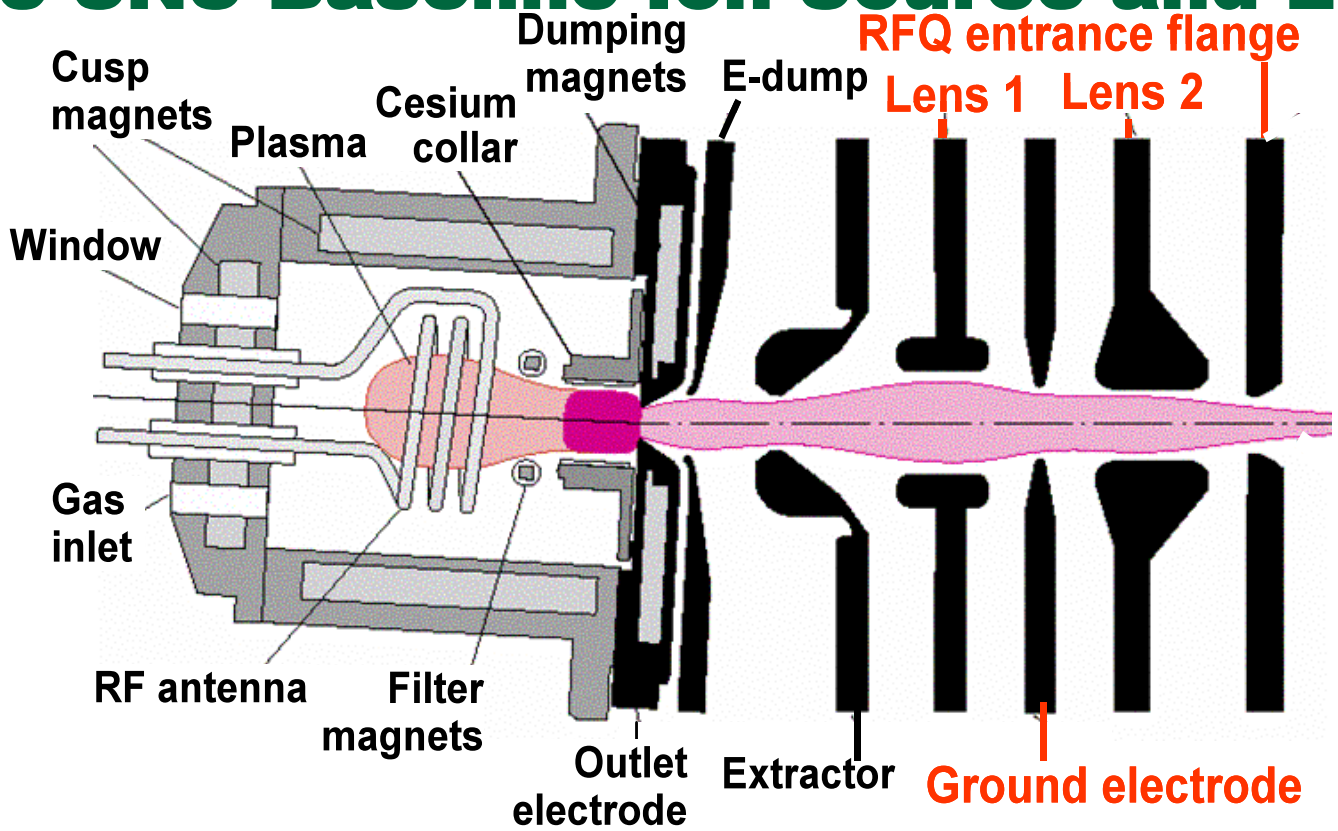

- LBNL developed the SNS baseline ion source, a cesium-enhanced, multicusp ion source. Typically 250 W from a 600-W, 13-MHz- amplifier generate a continuous low power plasma. The high current beam pulses are generated by superimposing 30-70 kW from a pulsed, 80-kW, 2-Mz amplifier.
- The two-lens, electro-static LEBT is 12-cm long. Lens-2 is split into four quadrants to steer, chop, and blank the beam.

OAK RIDGE National Laboratory

SNS Ion Source & LEBT Plan and Performance

Production Run	Duty factor	Pulse length	mA required	mA in MEBT	RF [kW]	%Availability	Comments
FY06-1		~.1 ms	20	28-20	~70	99.9	1 ion source, 1 cesiation, raise collar temp
FY07-1	0.2%	~.25ms	20	30-16	~70	99.98	1 ion source, 1 cesiation + 24h @115°C
FY07-2	0.8%	~0.4ms	20	20-10	60-80	70.6	Arcing LEBT; antenna puncture after 37 days, start 2-week source cycles
FY07-3	1.8%	~0.5ms	20	13-20	80	97.2	Modified lens-2; e-target failures; tune for long pulses
FY08-1	3.0%	~0.6ms	25	25-30	35-50	99.65	modified Cs collar (Mo outlet)
FY08-2	3.6%	~0.6ms	25/30	20-37	uncal.	94.9	Restore matching network; new tube; Beam on LEBT gate valve
FY08-3 FY09-1	4.0%	0.69ms	32	32-38	48-55	99.22	Start 3-week source cycles; Ramp up e-dump
FY09-2	5.0%	0.8 ms	35	33-38	~50	97.52	Start "Perfect Tune";remove external antenna source after 8 weeks
FY09-3 FY10-1	5.6%	0.9 ms	38	30-42	45-50		Pre-align LEBT; start 4- & 5-week cycles reduce RF power to avoid amplifier trips
FY10-2	6.2%	1.0 ms	38				

The SNS Power Ramp Up Plan is simple:

1) With every run, ramp up pulse length and duty factor - up to 1 ms and 6%.
2) Start with accelerating 20 mA, then ramp by ~5 mA with every run up to 38 mA.
3) Simultaneously ramp up Source & LEBT availability from 95% to 99.54%.

So far the plan has mostly worked, except for a few things that went wrong.
However, all major failures are well understood and mitigated.

A 24-day cycle ran with 42 mA, 10% more than the 1.4 MW requirement!

Managed by UT-Battelle
for the Department of Energy
OAK RIDGE National Laboratory

FY09-2 baseline source performance: May to July 2009

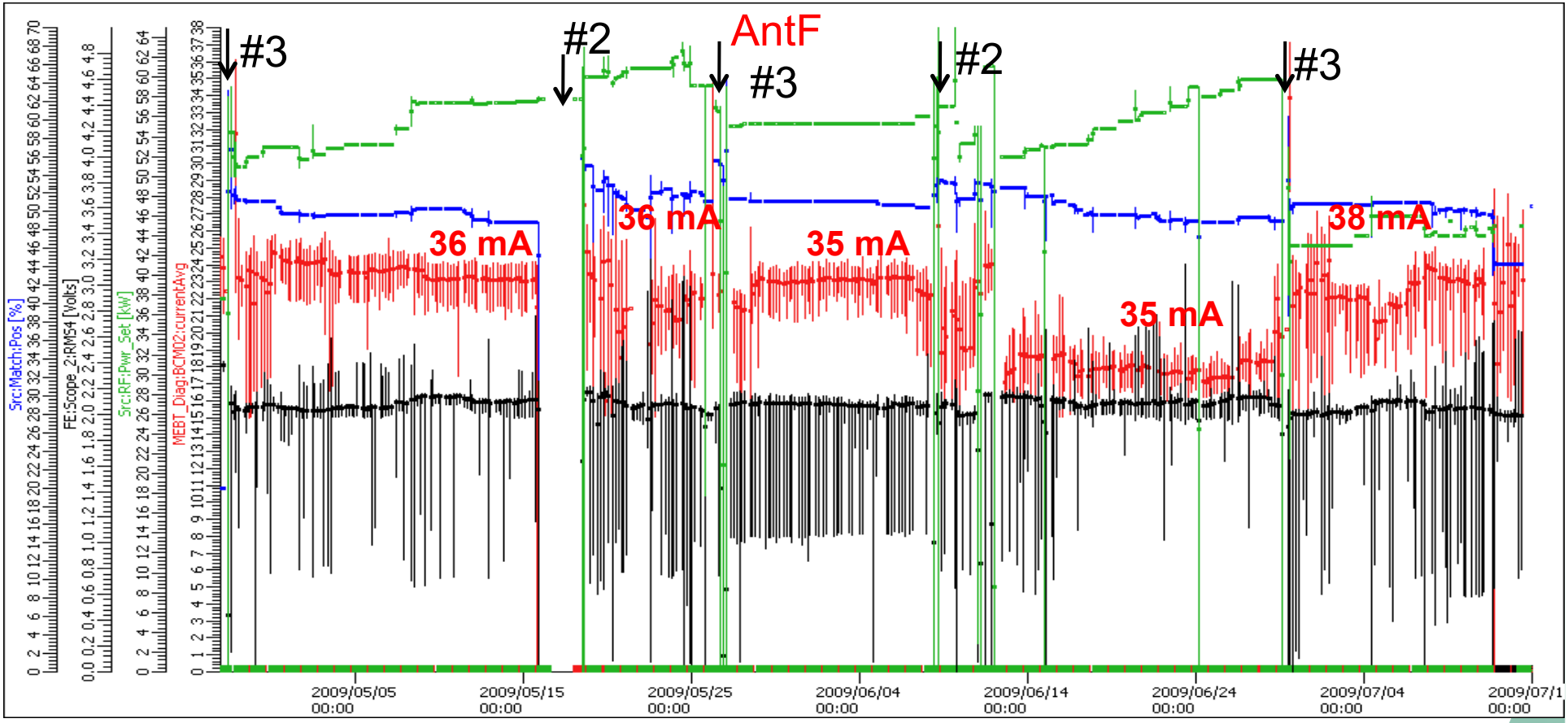

Infant mortality of internal antenna limits the source availability ~99.5%, insufficient for the desired 95% facility availability!

OAK RIDGE National Laboratory

High current operation of the baseline SNS source

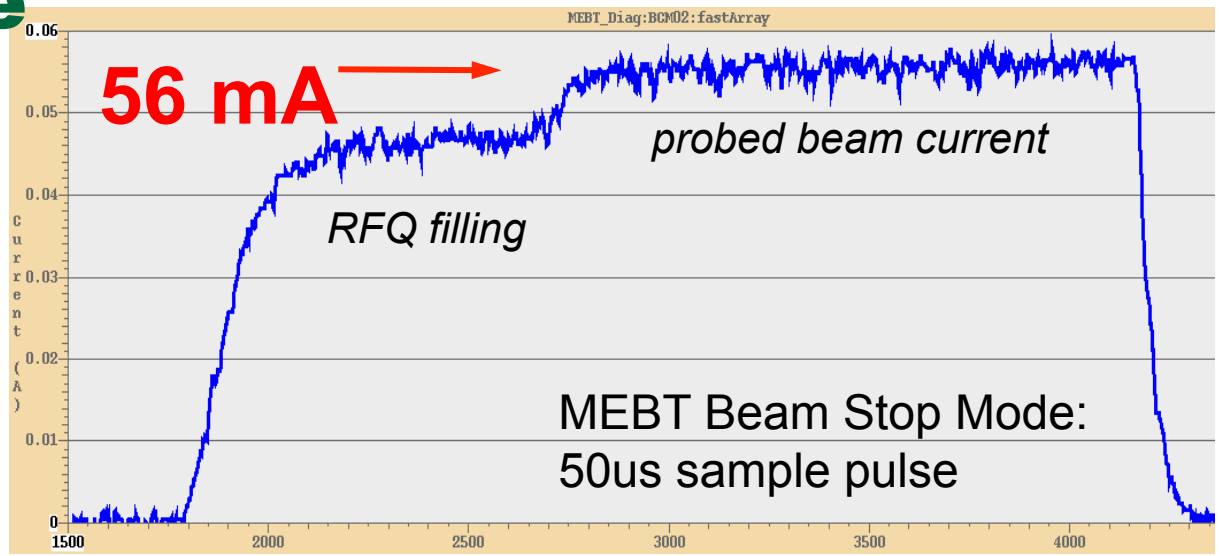

11-3-08, ~20 min. before shutting down the source after a 12 day production run.

- **Last fall 56 mA MEBT beam current was produced halfway through 0.69 ms long pulses at 60 Hz using <60 kW of 2 MHz after a 12 day production run - close to the 59 mA needed for 3 MW operation!**
- **Recently, 46 mA were produced for 32 hours at 5.4% duty factor.**
- **Also 24-day cycle ran with 42 mA - 10% more than the 1.4 MW requirement!**

Oak Ridge National Laboratory

SNS External Antenna Source

- In FY09 about 50% of the 22 internal antennas employed showed damage after operation - remarkably only 1-2 caused source failures
- In FY2010 we plan to extend source service from 3 to 4-5 weeks while increasing beam current and duty-factor.
- Infant mortality of internal antenna limits the source availability ~99.5%, insufficient for the desired 95% facility availability.
- We are therefore developing new ion sources featuring a water-cooled AlN plasma chamber and external antenna

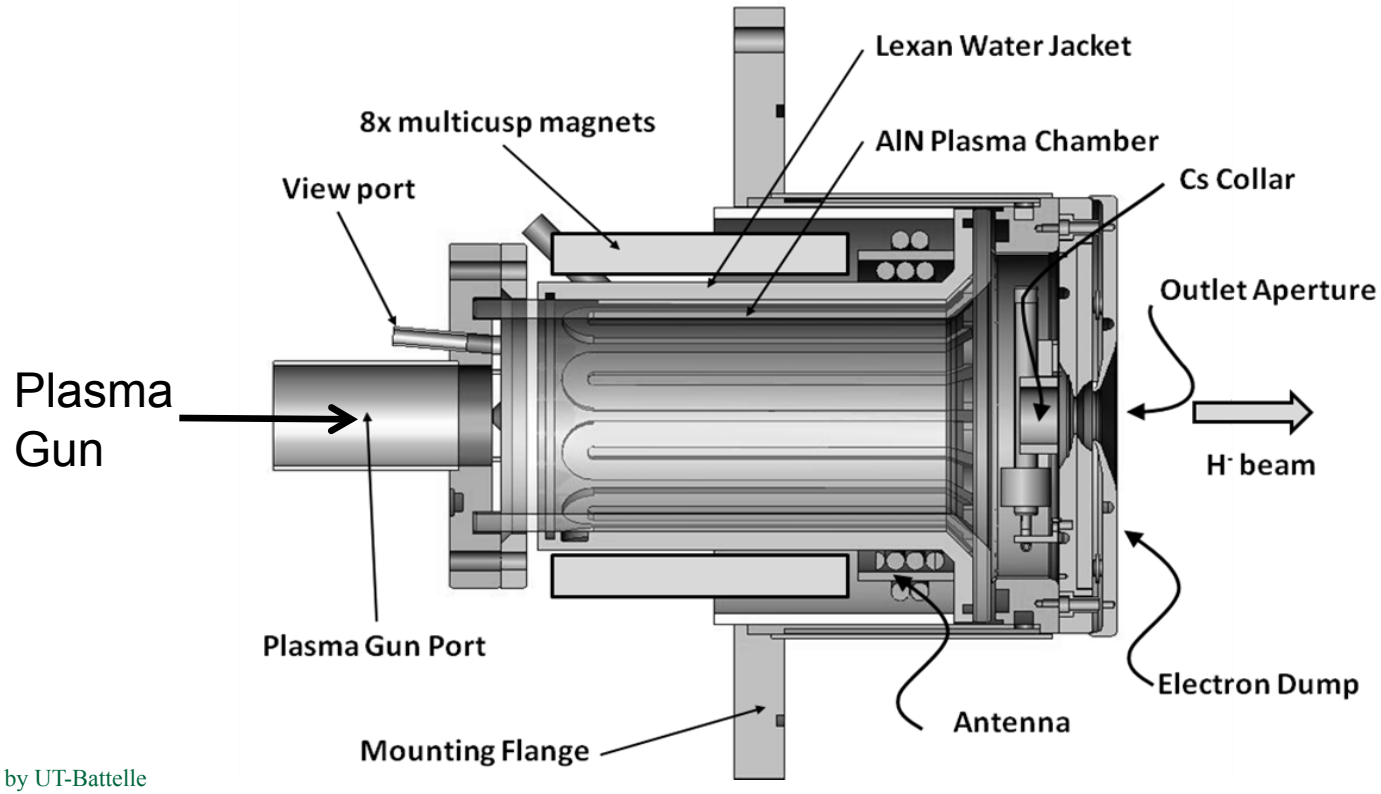

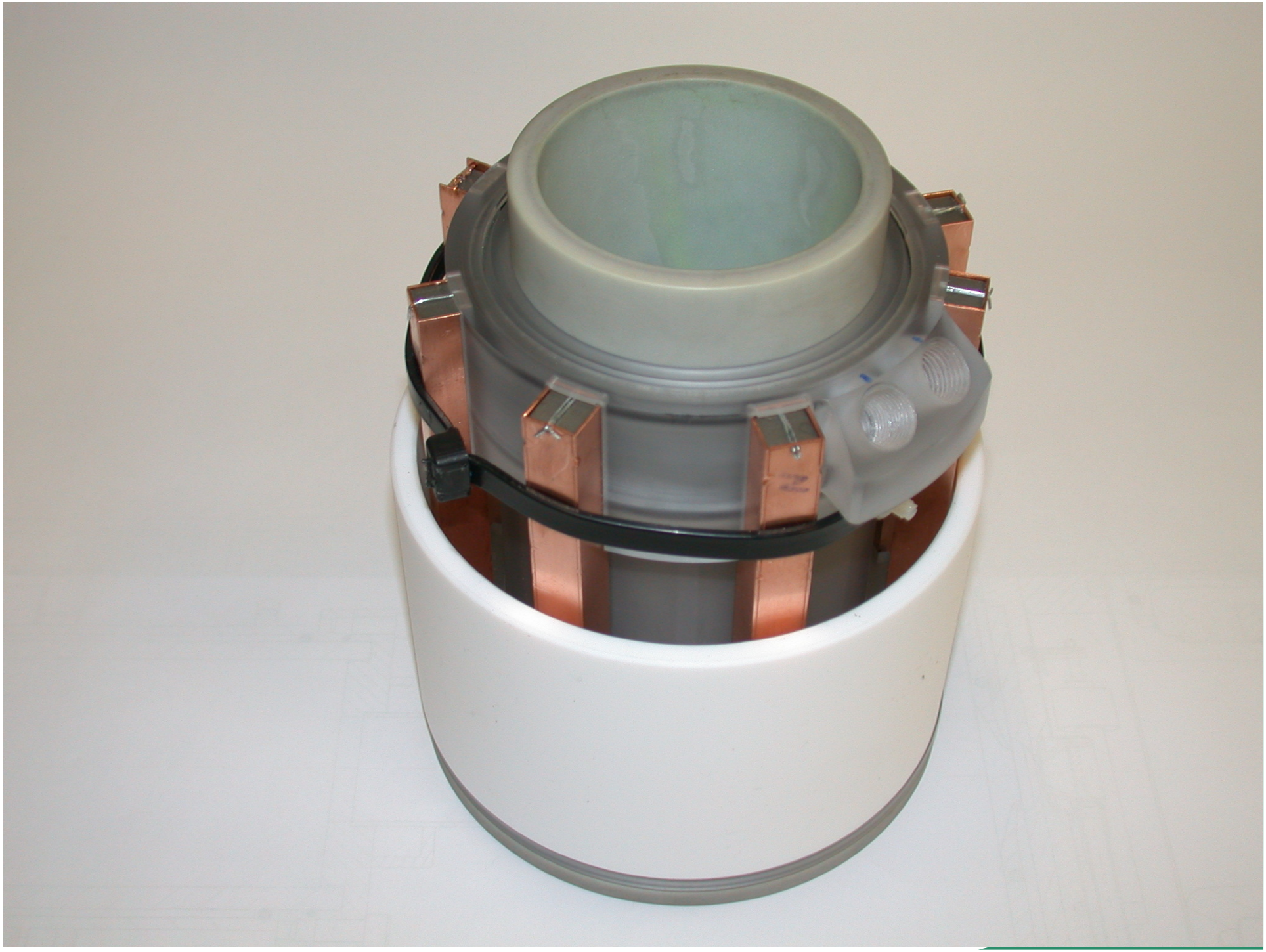

A brief history of testing of the AIN external antenna source

- AIN Source first tested on test stand January 2008
- Early testing on stand (Jan-July 2008) focused on the elemental Cs system – 100mA achieved!
- Later testing on stand (July 2008 to present) focused on using baseline chromate Cs system
- Early tests on SNS front end spanned only a few days and showed that ~40 mA could be transported through the RFQ (July 2008)

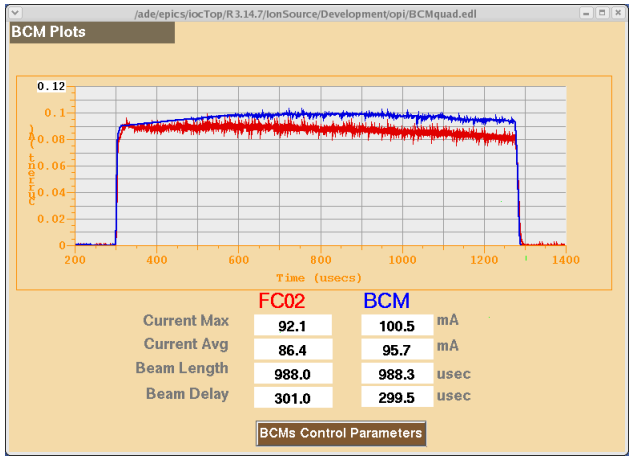

- 4 production versions of the source were prepared and testing on the stand began in Nov 2008

- Front end operation spanned Feb – April 2009 and provided us with invaluable operating experience with this source.

OAK RIDGE National Laboratory

Emittance of the external antenna source measured on test stand

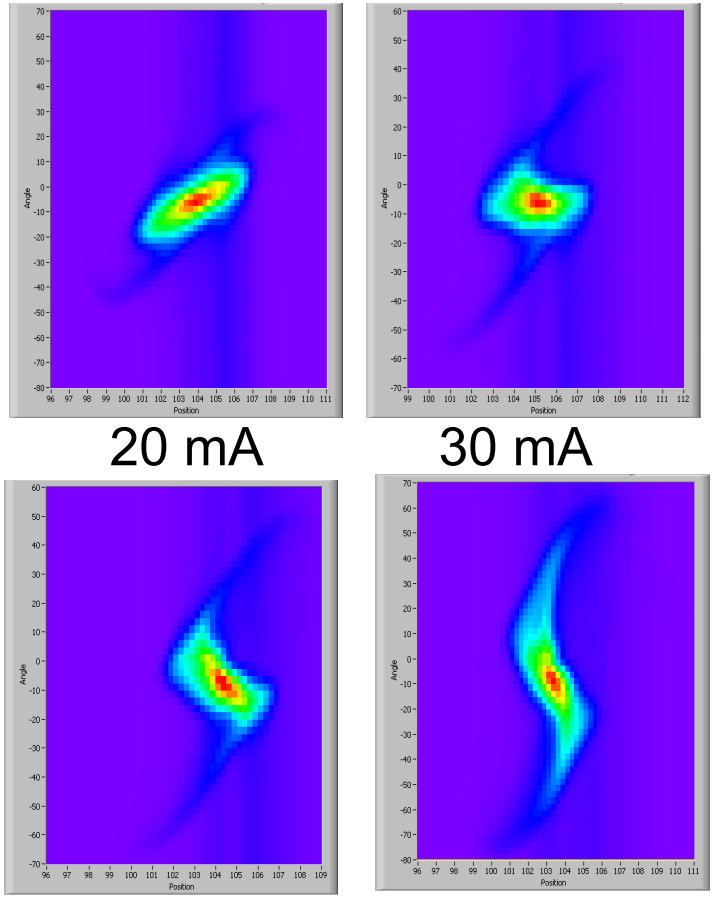

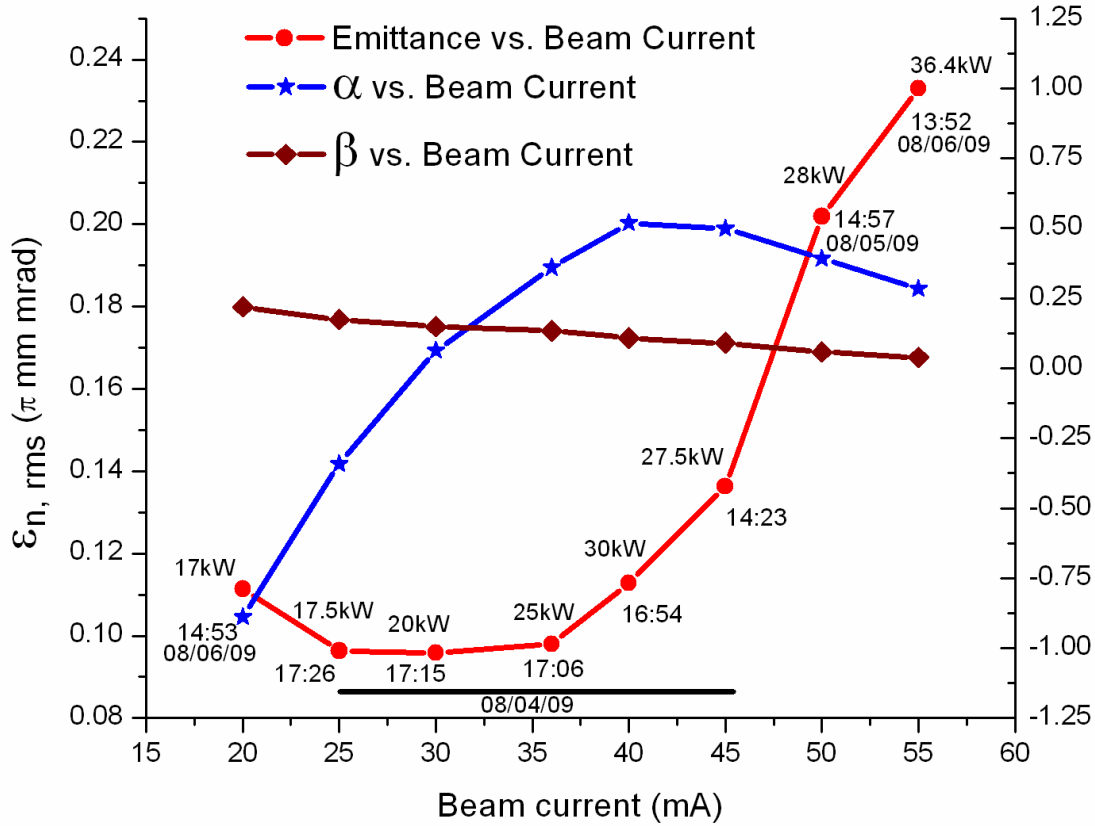

IS: -65kV, E-dump: -58.8kV, Extractor: 0, Lens1: -48.0kV, Lens2: -27.0kV, 10% thresholding

Courtesy of B. Han

External antenna source on FE (3/2-4/27/09)

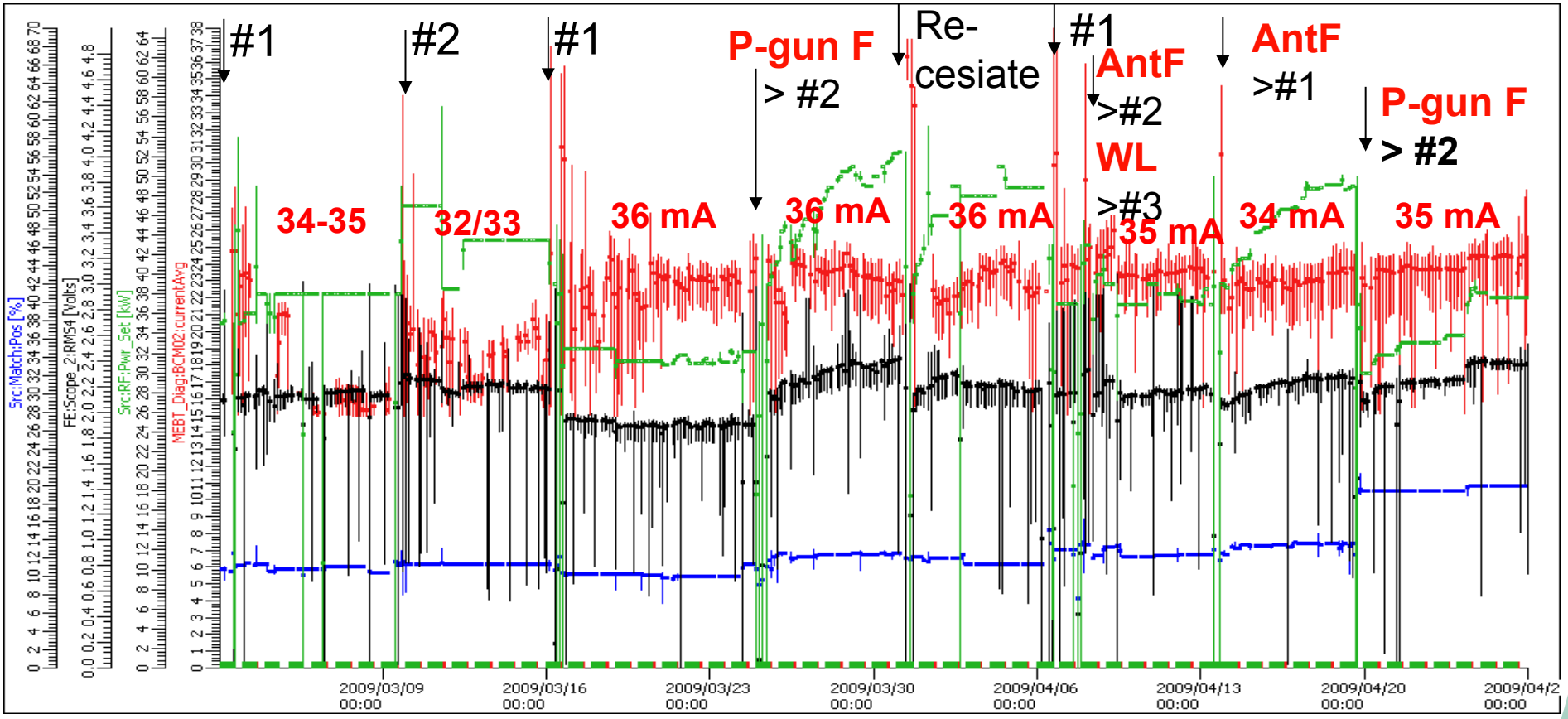

- **A concern is an unexplained poisoning effect, which, in some cases, requires increasing the antenna current by ~ 10% per week to maintain constant beam current. This problem is currently being studied on the test stand and needs to be resolved before further implementation on the SNS accelerator.**

OAK RIDGE National Laboratory

Summary of source performance

- So far LBNL H^- source provides approximately the same beam currents with less antenna current, but slightly RF higher power.
- Source availability during its first operational run was 96.6% due to:
  - 1 water leak in cooling jacket (later found bolts not tight)
  - 2 antenna failures
  - 2 plasma gun failures
- The remainder of FY09-2 employed the LBNL H^- source also experienced an antenna failure, yielding an availability of 99.5%
- The ion source and LEBT system availability was 98.1%, mainly due to RF amplifier problems. This was below the desired availability of ~99%.
- The above engineering issues must be addressed before continued service of the source….

OAK RIDGE National Laboratory

Improved Plasma Chamber Cooling Jacket

- Early versions were made from unannealed polycarbonate which developed small fractures from residual stress and deformation under water pressure leading to small leaks which would terminate source operation
- The current version employs a both dimensionally stable PEEK and stainless steel materials, see photo below
- Jacket is performing well during initial testing on the test stand
- **No failures** of revised water jackets yet noted

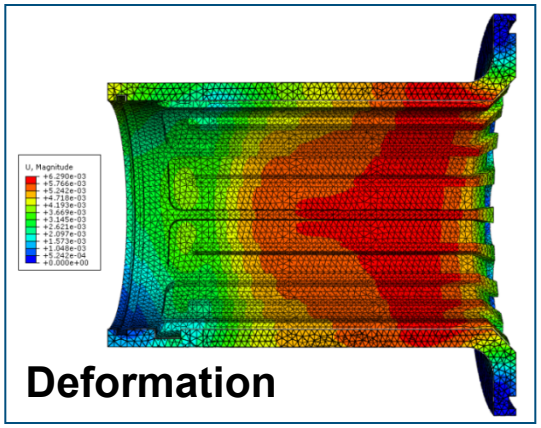

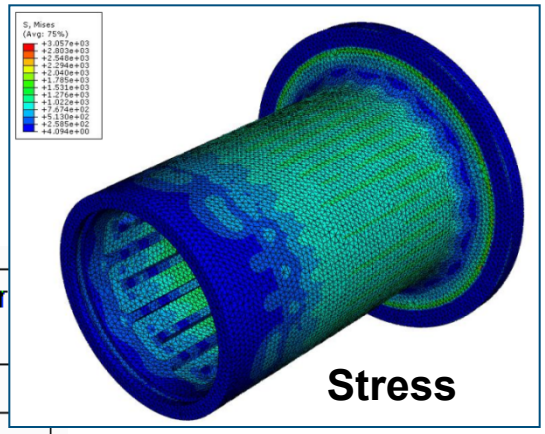

	Original Polycarbonate Water Jacket	Revised Polycarbonate Water Jacket	Revised PEEK Water Jacket
Maximum Stress (psi)	4,000	1,500	1,500
Tensile strength (psi)	8,700	8,700	13,800
Factor of Safety (FOS)	2.175	5.800	9.200
Maximum Axial Deflection (Backward from Flange)	0.02	0.005	0.005
Maximum Cylindrical Swelling (Radially away from Axis)	0.02	0.008	0.006

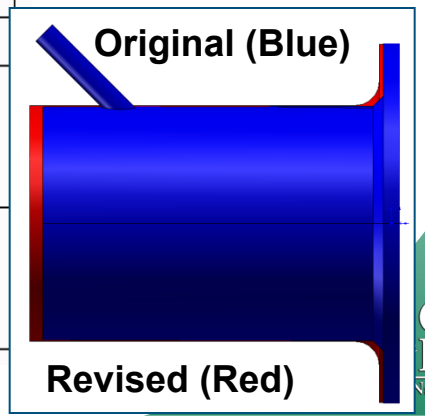

PEEK Cooling Jacket and SS Manifold

Improved RF Antenna and Ferrite Backing

- Several antenna failures were noted during operation - burning of the polyolefin insulation
- It was discovered that during antenna fabrication inner and outer turns were no sufficiently separated resulting in RF electric fields which exceeded the breakdown strength of air.

- Inner and outer turns were then separated (as in the original design) using a 3/32 inch Teflon separator and **no failures** were noted thereafter over several experimental runs
- To further reduce the peak and overall electric fields of the antenna a 3.5-turn antenna and Teflon holder have been designed
- Alternatively, potting the antenna also remains a promising approach
- Optional Ferrites backing the antenna will enhance the inductive coupling efficiency with the plasma and are in new design

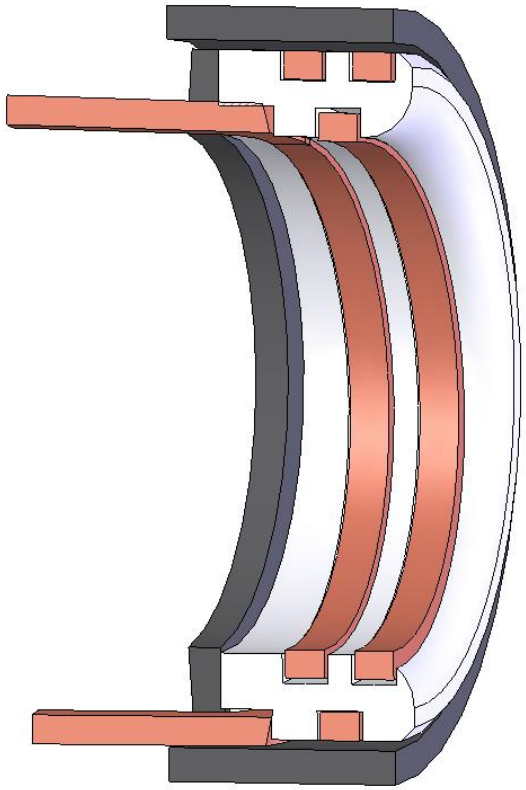

OAK RIDGE National Laboratory

Improved Magnet Cooling and Confinement

- Multicusp confinement magnets in the external antenna source occasionally overheat. New magnet configurations provide better cooling as well as higher magnetic confinement fields. Combines magnet holders and water manifold.

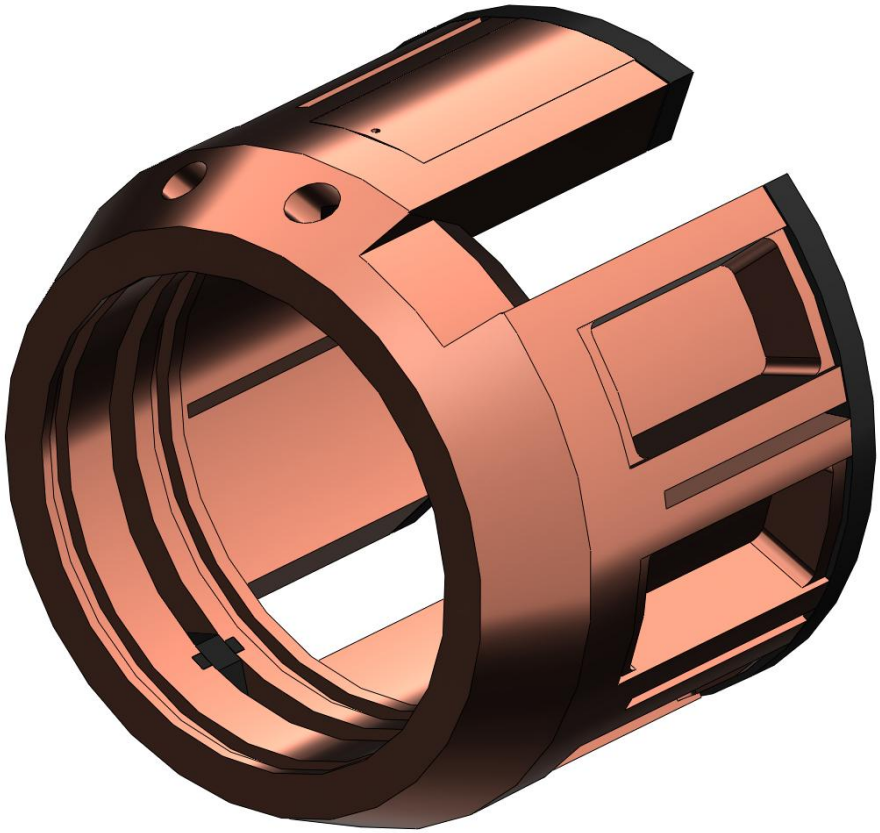

Improved Magnet Cooling

- RF power dissipation on the surfaces of the magnet holder was calculated from CST MICROWAVE STUDIO and used as loads for Cosmos Floworks….

Octapole

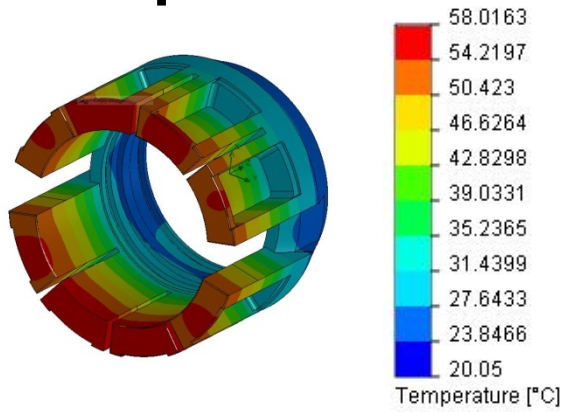

Hexapole

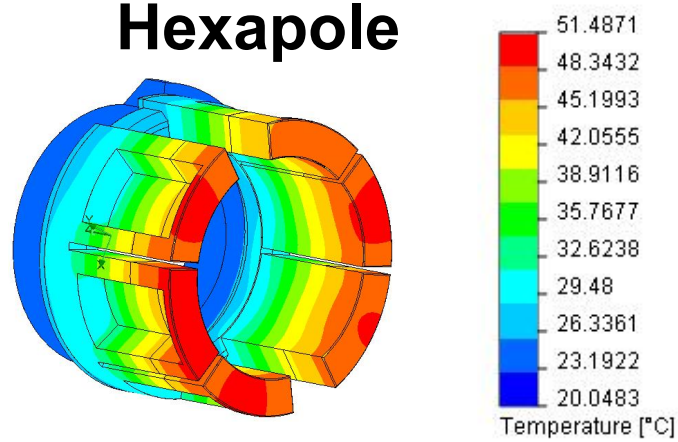

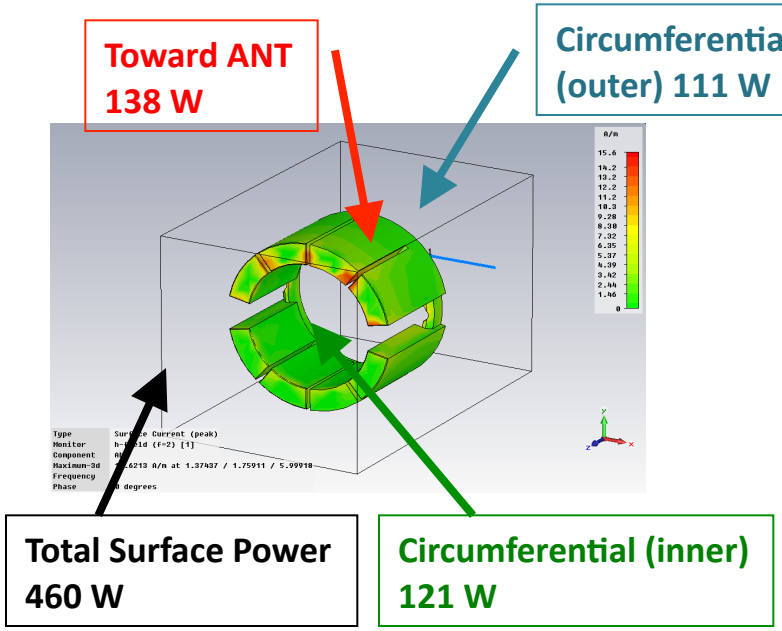

- Thermal simulations show that for a net RF power of 50 kW (6% duty-factor) and cooling of 1.5 GPM the maximum temperature where the magnets contact the holder as <50 ºC and ΔT of water as 1.5 ºC.
- Calculations performed under worst case scenario: no plasma present to absorb power
- Actual temperature is less since the plasma and ferrites will significantly reduce heating.

OAK RIDGE National Laboratory

Improved Magnet Confinement

- Work of T. Kuo shows increasing confinement benefits H^- production
- The new configuration offers 1.7 (octapole) and 2.3 (hexapole) -fold increase in magnetic plasma confinement fields as well as improved cooling.

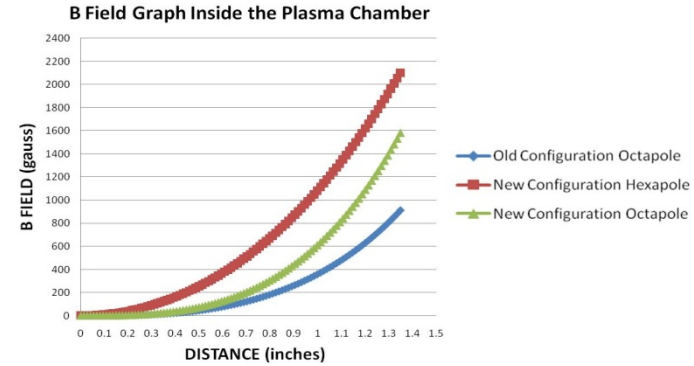

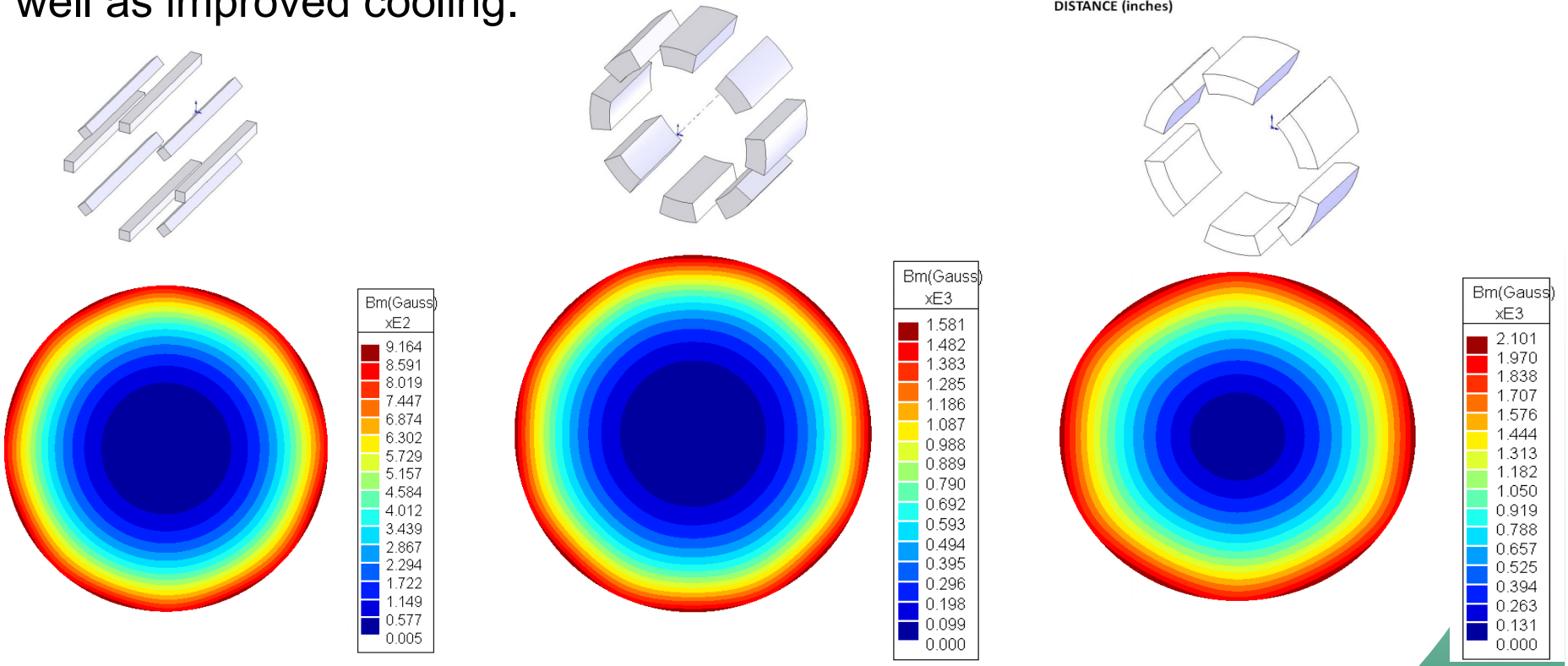

Current Hexapole

Proposed Octapole

Proposed Hexapole

Improving Plasma Ignition…

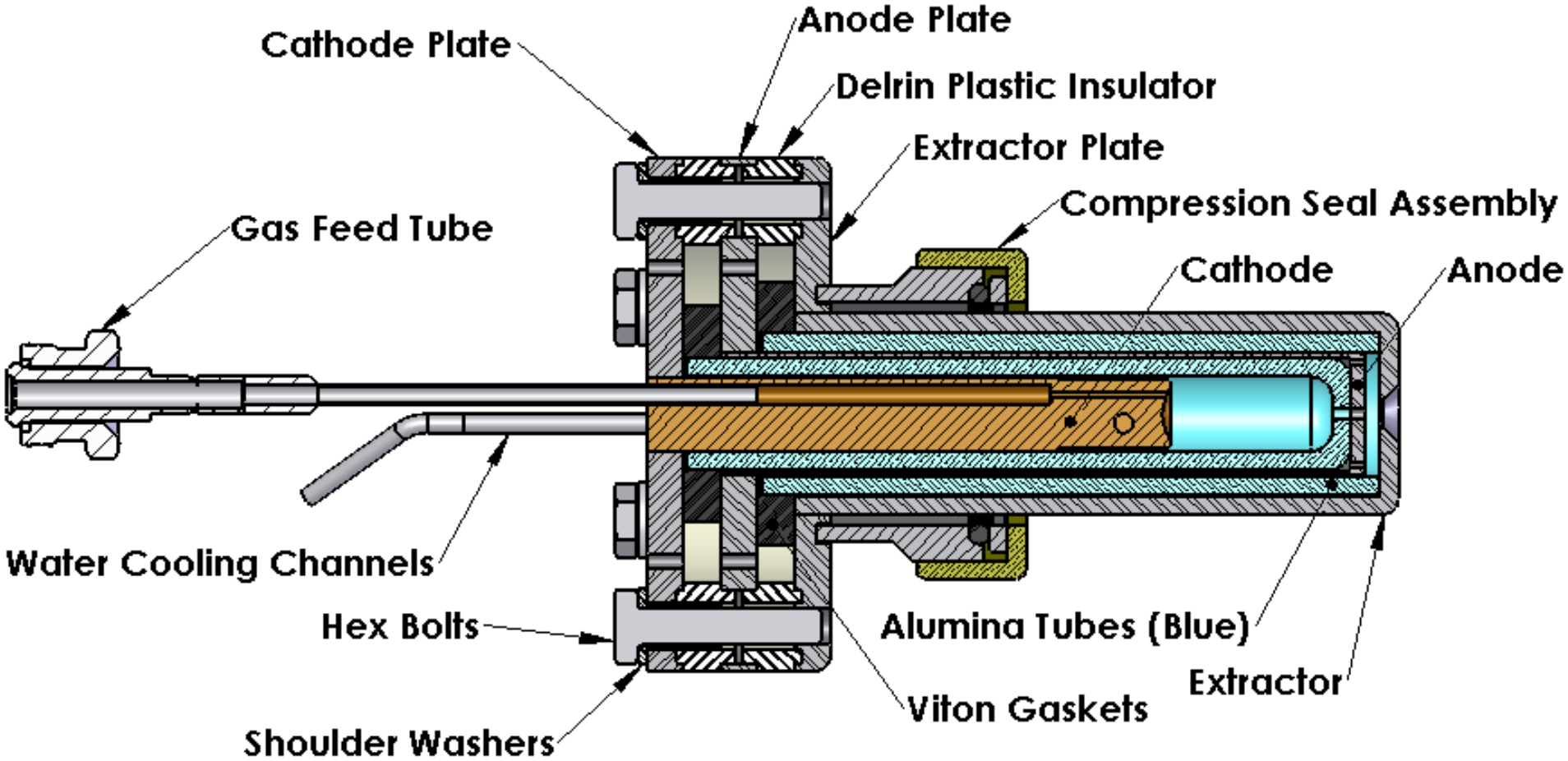

- Reliable plasma ignition remains as a major problem with this source
- Currently CW plasma guns (shown above) affixed to the rear of the source – guns usually require about 5 W of discharge power.
- Alternatively CW 13 MHz can be used for plasma ignition.

OAK RIDGE National Laboratory

Improving Plasma Ignition

- Plasma guns based on **Cu cathodes** have shown long-lifetimes but are not ideal since they sputter-inject noticeable layers of Cu into the plasma chamber. Figure shows gun emission current for a 4-month run.
- **Mo cathodes** offer less sputtering but some seem to exhibit an unexplained poisoning effect after 1-2 weeks of operation rendering the source inoperable.

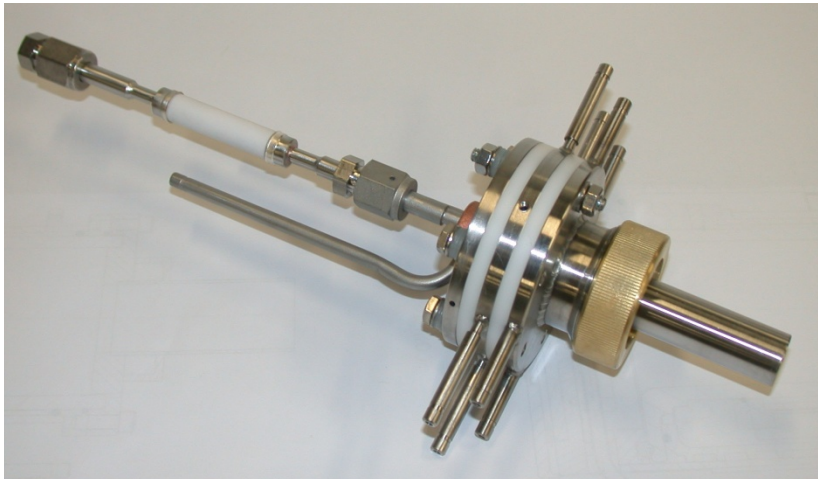

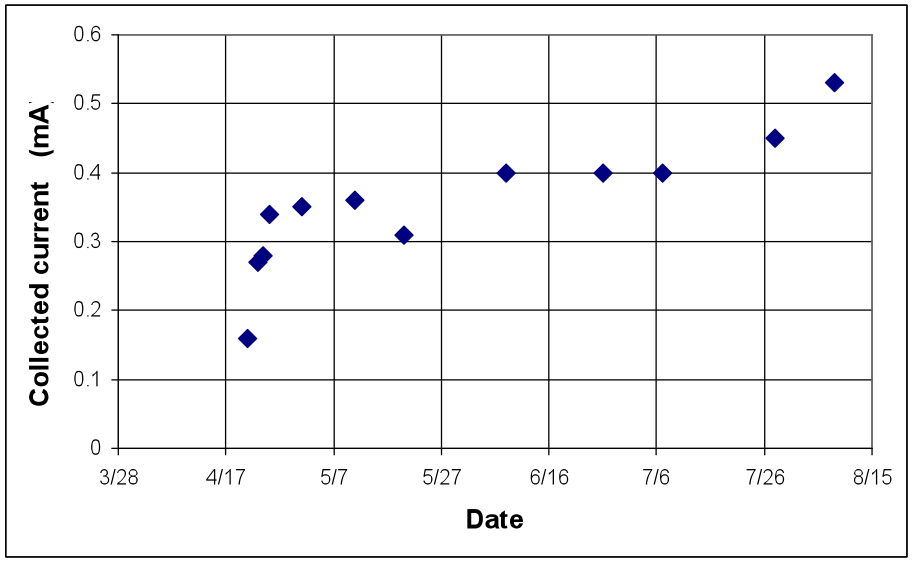

- The application of 13 MHz RF directly to the primary antenna requires high RF CW power-levels of 0.5-1 kW (increasing with time) for reliable ignition and suffers from cross talk issues between the 2 and 13 MHz systems.

Improving Plasma Ignition

Several approaches are being pursued:

- Identifying and testing, on a multiport, long-lived, low-sputtering cathode materials employed in hydrogen thyratron devices.
- An 13MHz RF plasma gun has been designed to replace the existing DC plasma gun on the source.
- Contingency plan: obtaining a commercial electron gun (see Heatwave slide)

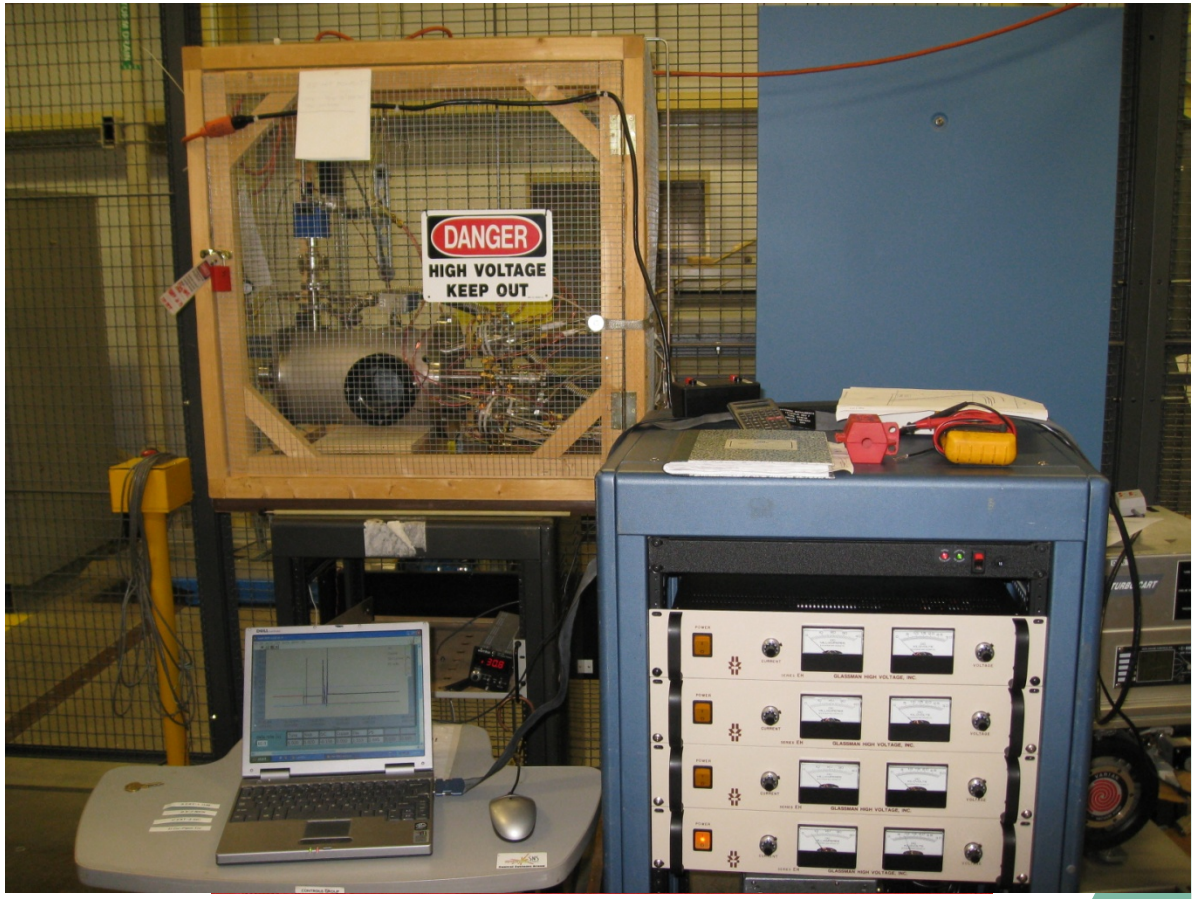

OAK RIDGE
National Laboratory

Plasma Gun Test Stand : Cu, Ni, SiC and W Cathodes Tested

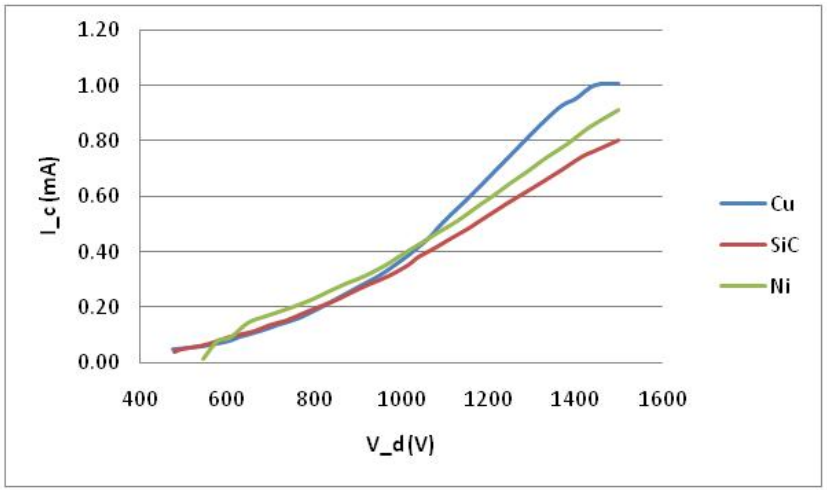

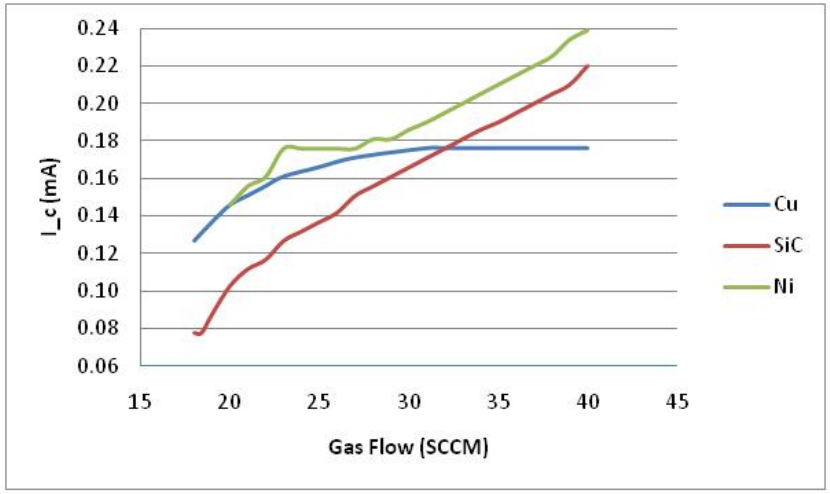

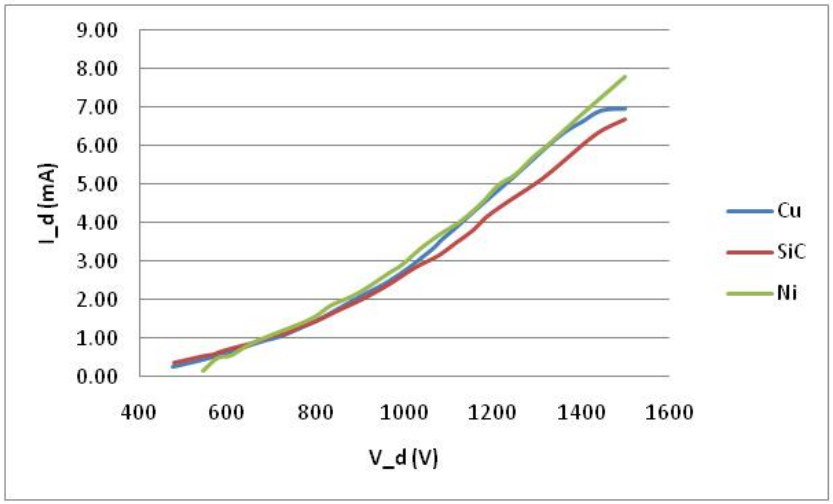

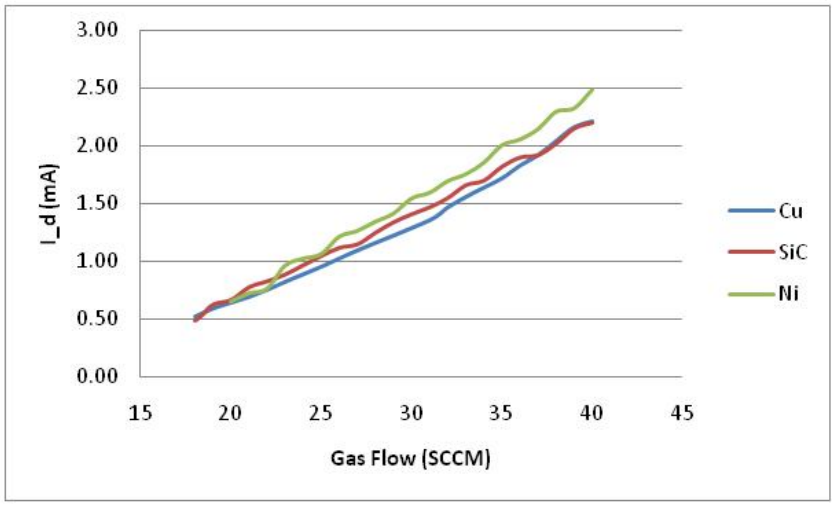

- **For varying voltage plots, gas flow held constant at 30.9 SCCM. For varying gas flow plots, voltage held constant at 800 V.**
- **Lifetime tests will follow using several guns running in parallel**

OAK RIDGE National Laboratory

Improving Plasma Ignition

- An RF plasma gun will take advantage of the existing 13MHz RF system used with the baseline source. This should allow significant decoupling of the 2 and 13 MHz RF systems, reduced RF power requirement due to operation closer to the Paschen minimum (higher pressure) and power deposition into a separate cooling system.
- Offers sputter-free operation in contrast to DC plasma guns
- Preliminary test conducted at LBNL ignition achieved with ~10 W!

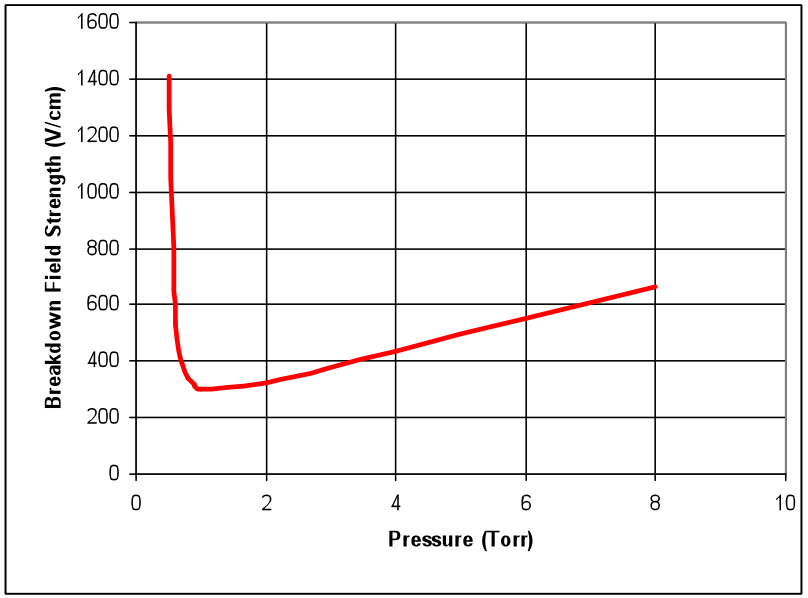

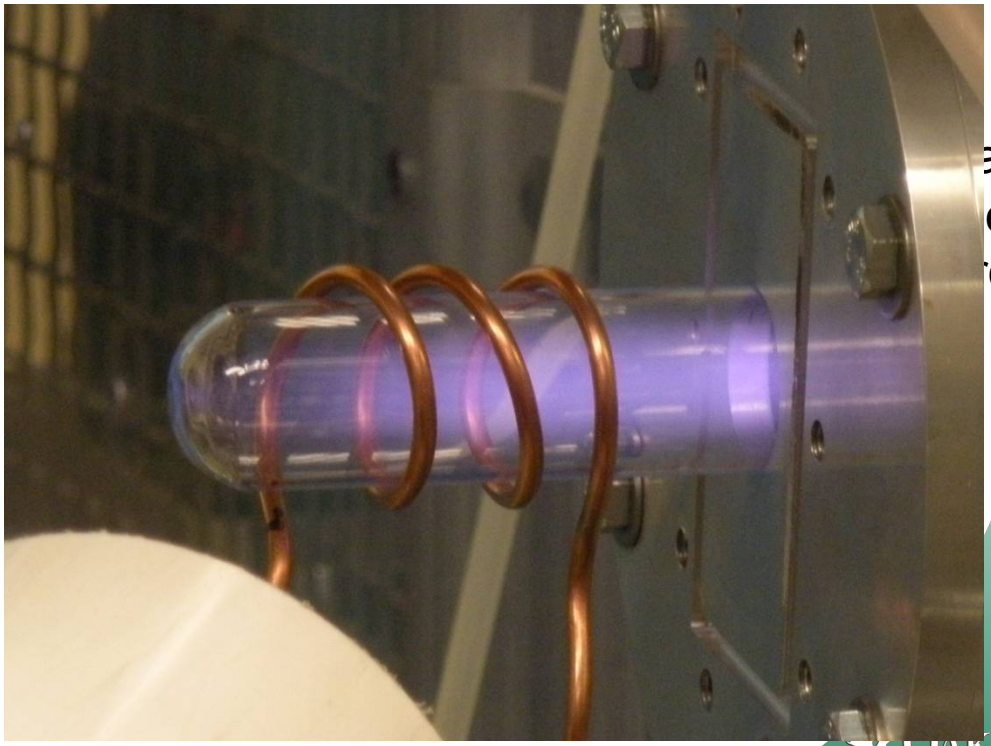

Integrating RF gun, cooling jacket, magnet holder, antenna and ferrites together

Designs are being finalized by the SNS mechanical group and fabrication should begin in early in 2010

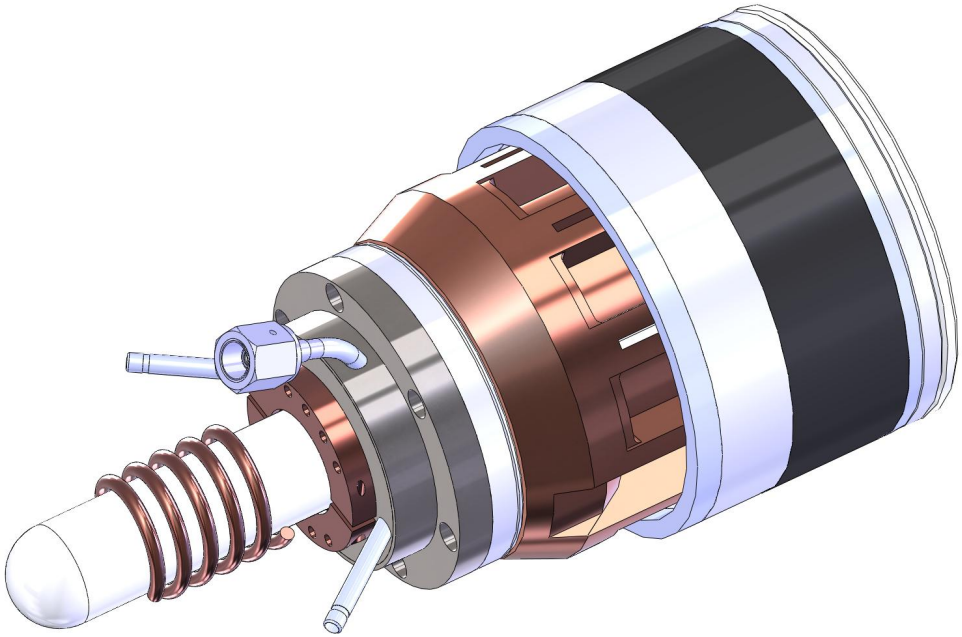

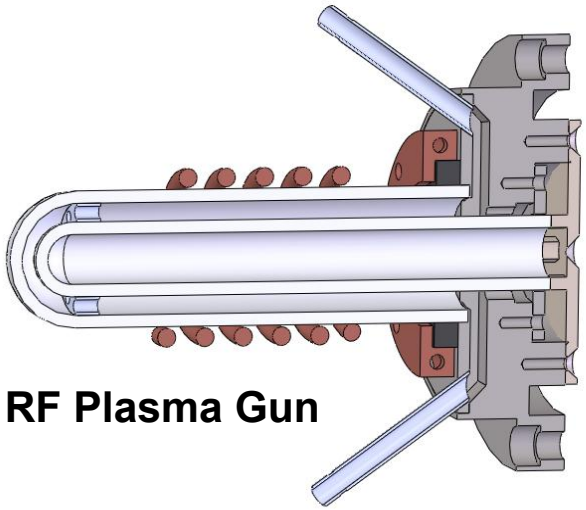

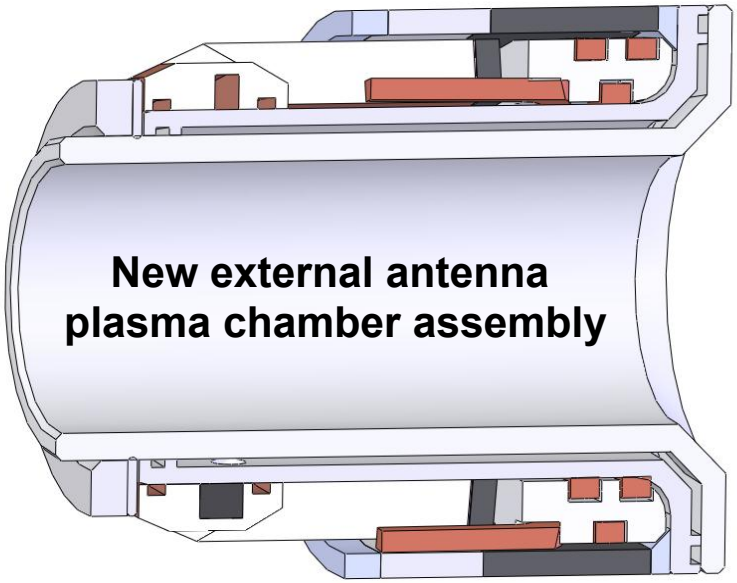

OAK RIDGE National Laboratory

Future directions: New extraction systems

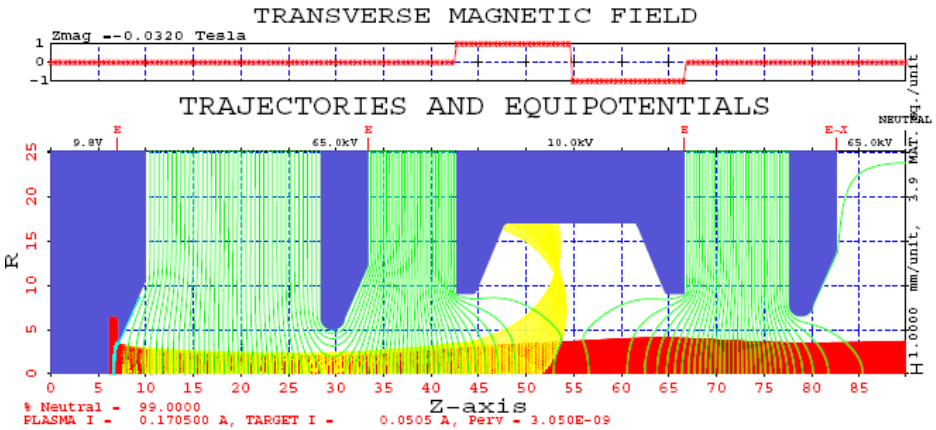

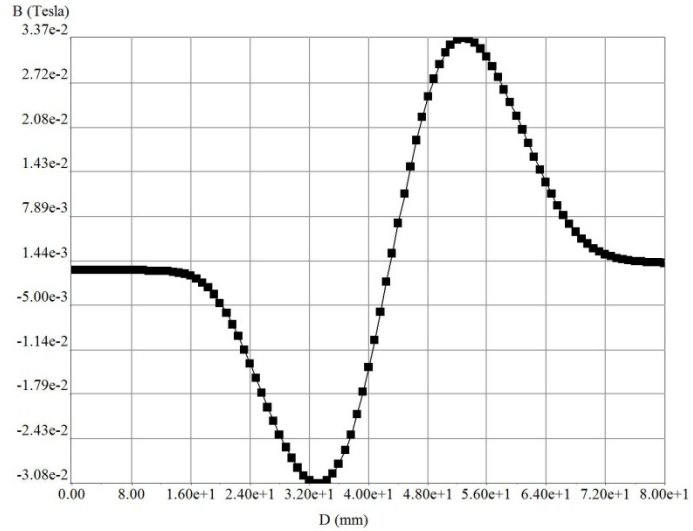

- Comparison with other H^- sources (SSC, DESY) suggests source efficiency may be improved with a higher electric extraction fields.
- Space charge from co-extracted electrons caught in transverse B-field may impede H^- extraction.
- Both PBGUNS and Lorentz simulations show that emittance can be improved using a high E-field extraction system ε_n (rms) = 0.11 versus 0.17 π mm mrad.

- New design significantly increases the E-field in the extraction region while virtually eliminating the transverse B-field in extraction region.
- Symmetrical dumping field removes electrons & corrects ion beam trajectory

New extraction system

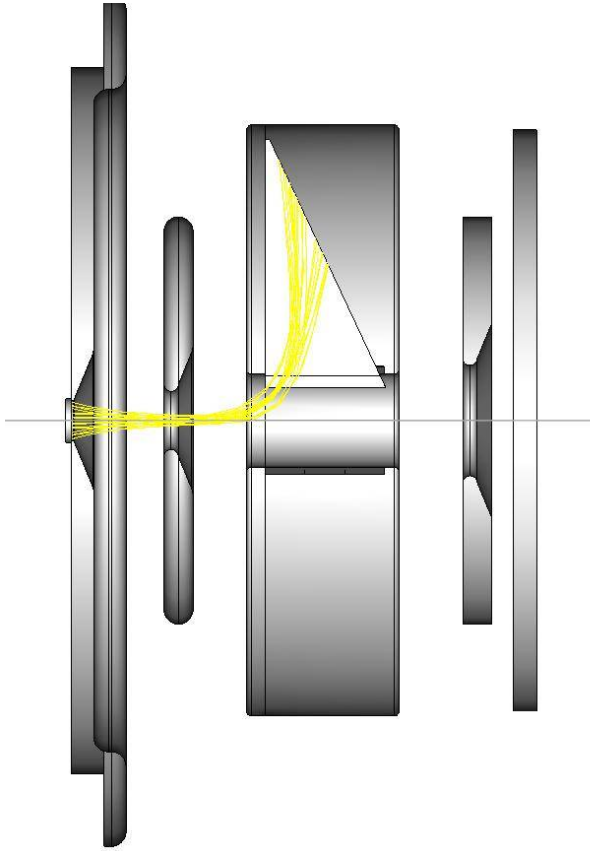

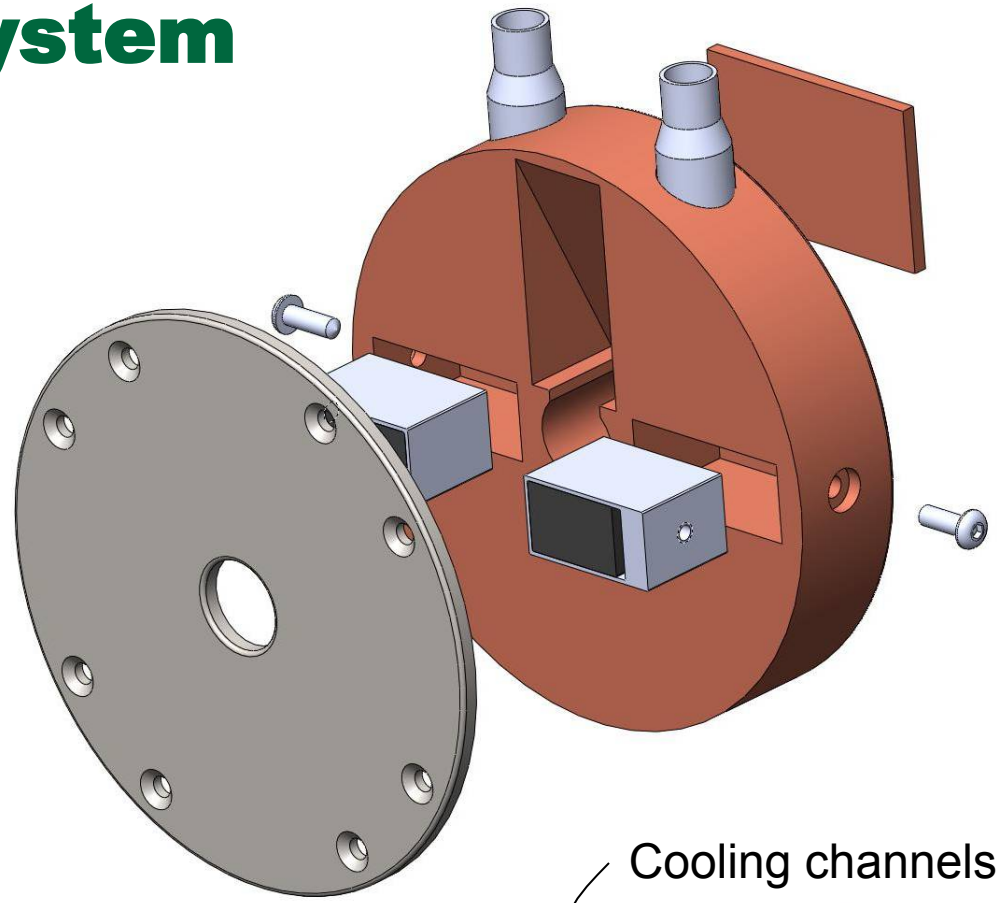

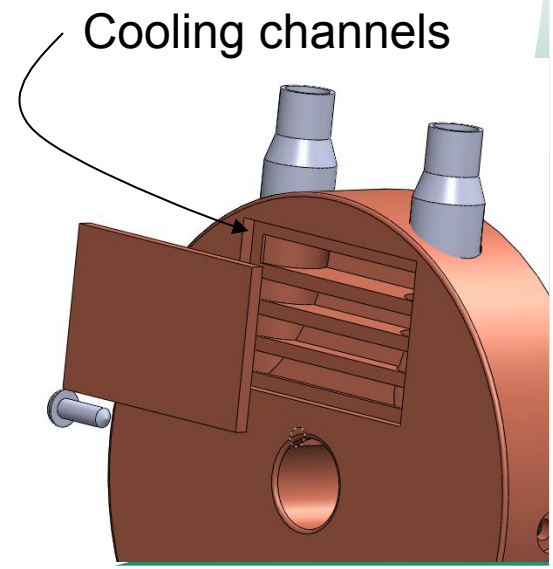

- Lorentz (space charge beam trajectories) and Cosmos (fluid and heat transfer) simulations tools show that dump can accommodate 1 A or electrons at 10kV at full duty-factor
- Temperature and thermal stress allow the use of OFHC copper as opposed to Glidcop

Future directions: Helicon plasma generation at ORNL

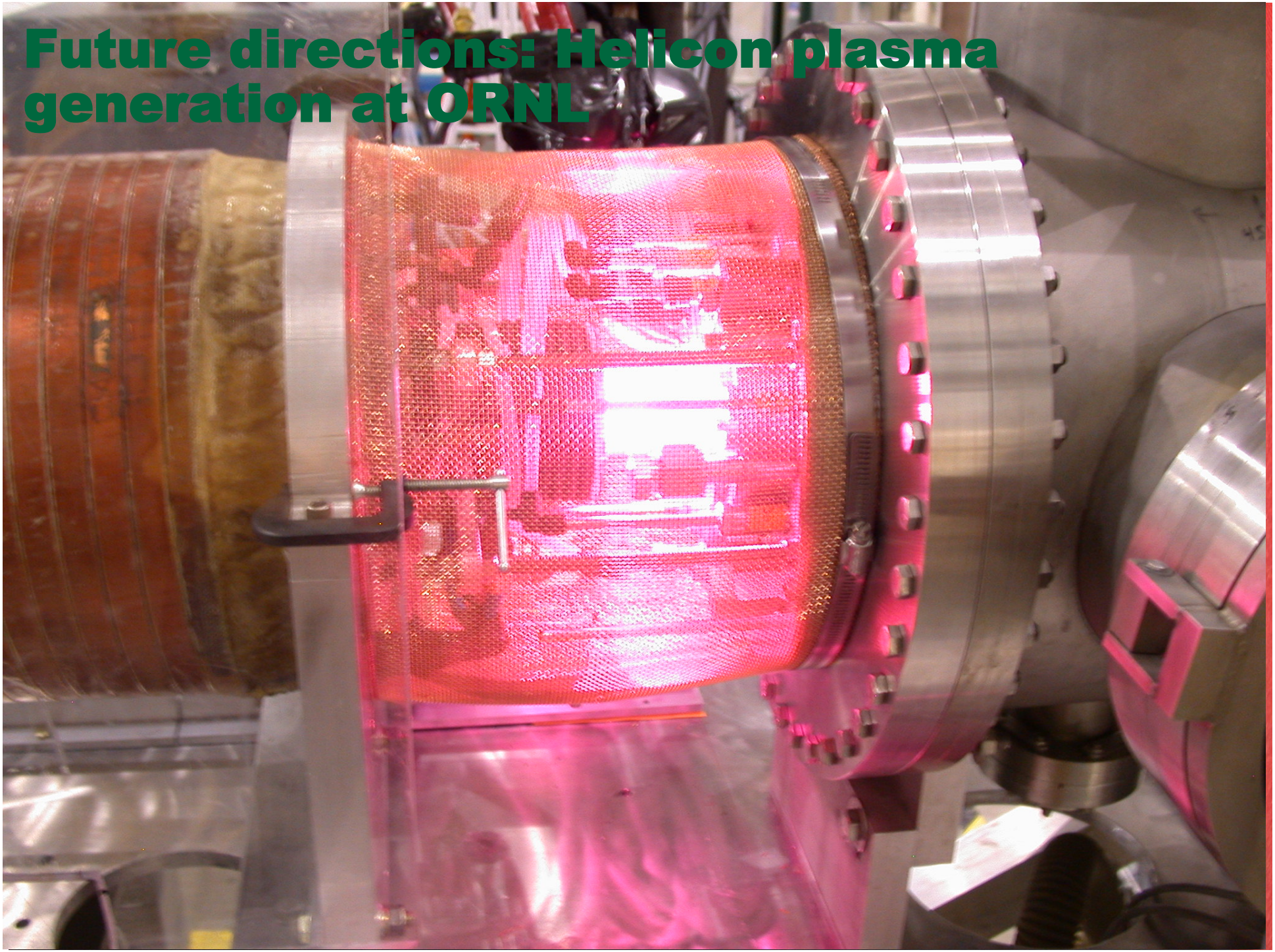

Fusion Energy Division Helicon Test Sta

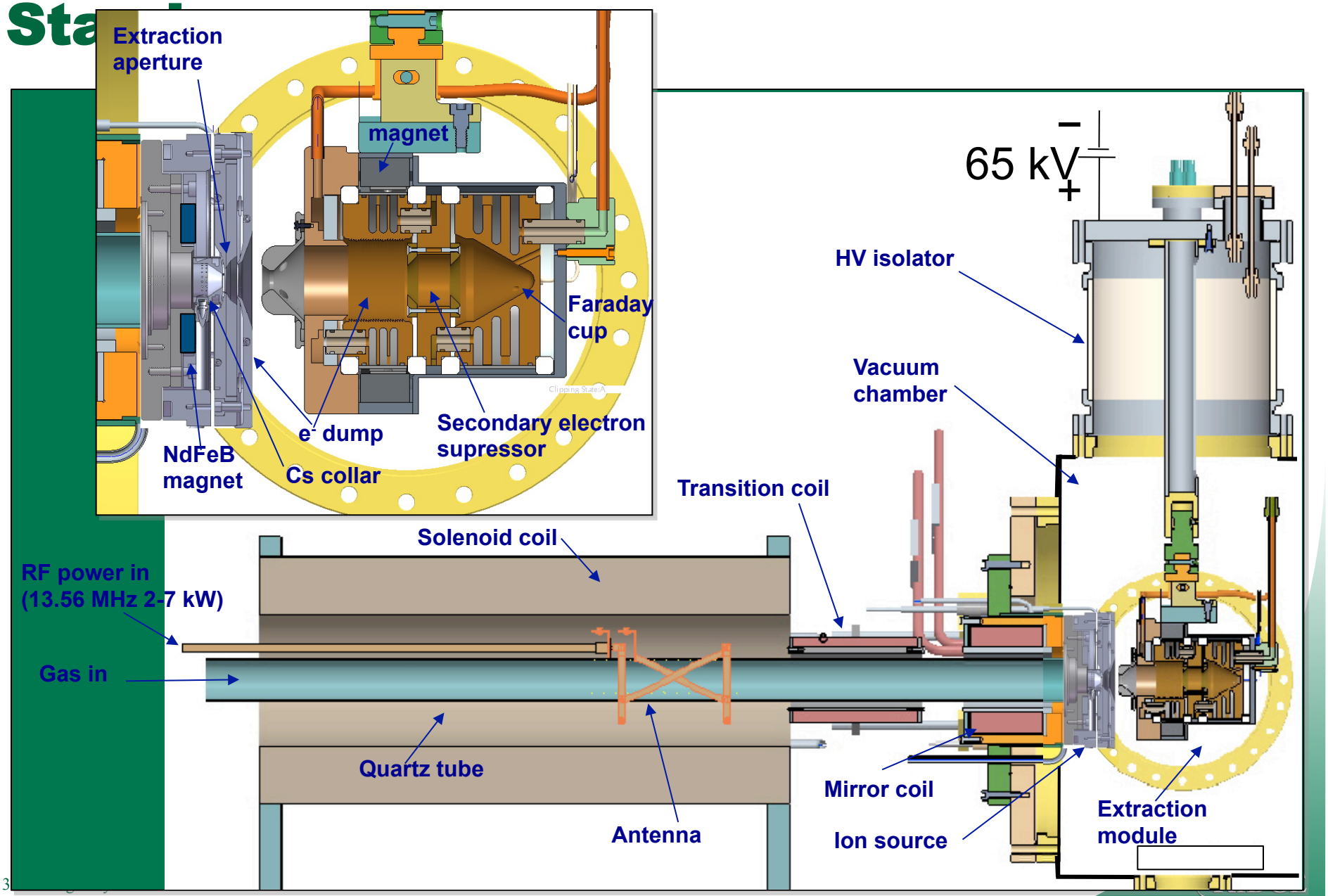

Summary

- SNS has achieved 1 MW operation and is on track to meet 1.2MW by 2010 and 1.4MW by 2011. Beam losses are largely as expected and availability is our main focus.
- Modified baseline source has been the workhorse employed in achieving 1 MW operation but infant mortality of internal antenna limits the source availability ~99.5%, insufficient for the desired 95% facility availability.
- External antenna sources promise higher availability and issues discovered during accelerator operation are being addressed.
- Fundamental concepts such as helicon plasma generation and alternative extraction systems are being explored in context of the SNS

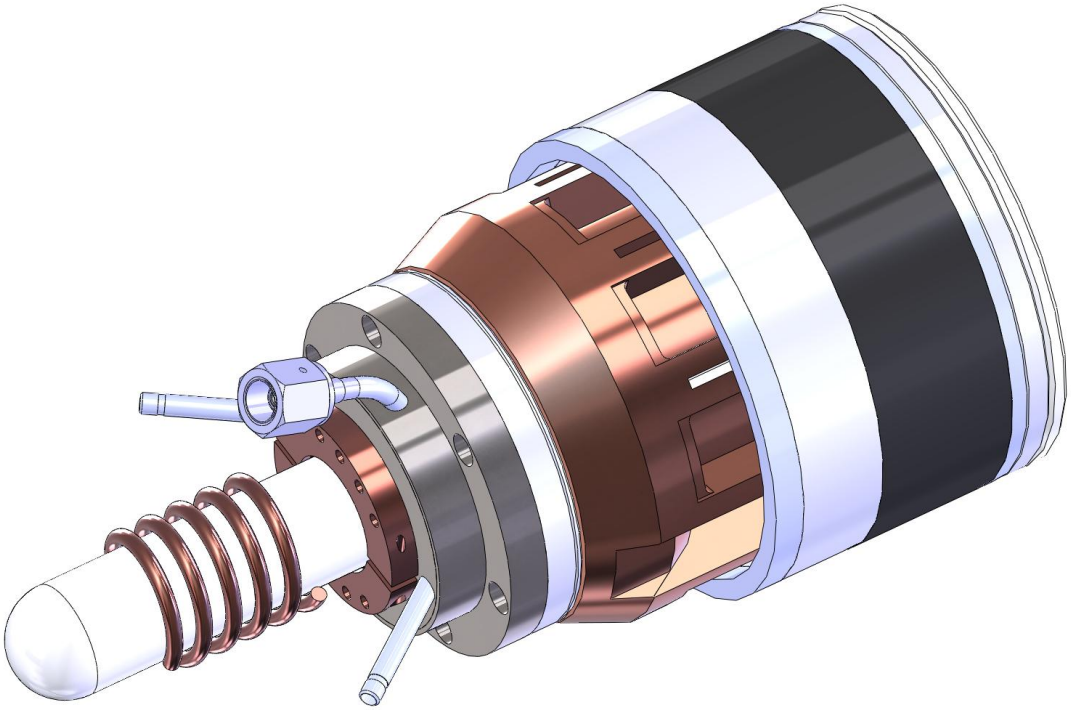

OAK RIDGE National Laboratory

For Ref: Operational history of the AIN source

Build number	gap (mm)	elog entry	notes	Performance: beam current	Antenna Current	RF power set/actual (bbb meter)	edump	gas flow	steering delta	collar temp (C)	f1 (kV)	f2 (kV)	end of run notes
ext3-01-14-09	0.12		cesiated on 1/27 no beam extracted										routine source removal
ext1-12-11-08	0.76	2-12-09-16:08	after cesiation	40mA	540A	37/kW	6.5kV	32.8	300	~30	46	46	
				35mA	520A	34/ kW	6.5kV	32.8	300	~30	46	46	routine source removal
		2-13-09-12:28		32mA	520A	34/ kW	6.5kV	31.8	300	~30	46	44	ceramic edump insulators
		2-13-09-17:44	recesiated	35mA	520A	35/27kW	7.0kV	27.3	500	~30	46	39	found arc-through due to high
		2-16-09-06:30	edump insulators found damaged	38mA	520A	35/27kW	7.0kV	37.3	500	~30	46	39	edump voltage
ext2-02-12-09	0.43	2-20-09-20:10	brief tune after Cs	33mA	520A	35/27kW	5.7kV	36.2	600	~30	48	44	
		2-23-09-12:23	2min cesiation	10-30mA									
		2-23-09-15:43	power study:	32mA	520A	35/27kW	6.3	31.2	500	~30	48	46	unable to maintain lite plasma
				35mA	540A	40/30 kW							source replaced due to
				38mA	560A	49/ kW							antenna / pgun problems
			New LEBT feedthrough issues										LBNL source tested 35mA / 31kW (44kW set)
ext3-02-03-09	0.36		pgun, RF amp & matching network water leak issues										
		2-27-09-22:58	before cesiation	35mA	520A	35/27 kW	5	45.4	200	~30	45	44	routine source replacement:
		3-1-2009-13:27	recesiated	33mA	520A	35/27kW	6.2	43.8	400	~30	45	41	high gas flow required
				34mA	600A	58/ kW	6.2	43.8	400	~30	45	41	backflange Ta shield not installed
ext1-02-20-09	0.76	3-3-09-15:09	alignment brought +7mA	35mA	540A	38/26kW	6.2kV	27.3	200	~40	48	45	routnie soruce replacement no findings upon source inspection
ext2-02-26-09	0.6	3/9/2009		32-33mA	600A	46/30kW	6.2	42.7	300	40	47	46	
		3-11-09-12:38	after cesiation	35mA	560A	39.5/kW	6.2	41.6	100	48	47	46	routine source replacement
		3-16-09-17:50	after cesiation	35mA	480A	32.5/kW	6.2	38.3	0	44	48	46	high H2 flow - outlet gap found
ext1-03-11-09	0.46	3-16-09:17:50	source conditioned w 560A	35mA	480A	32.5/kW	6.2	38	0	44	48	46	split backflange ring collapsed into antenna resulting in antenna damage pgun did not lite
ext2-03-18-09	0.61	3-25-09-10:59	source turn-over	36mA	540A	39/kW	6.2	27	100	47	48	46	routine source change
		3-26-09-10:35	1st heating of collar	37mA	580A	41.5/kW	6.2	24	200	150	48	46	
ext1-03-26-09	0.66	4-6-09-19:24	source ready for ops	36mA	520A	37/kW							antenna failure
ext2 -04-07-09			did not run										water leak in Lexan (bolts not tight)
ext3 - 03-06-09		4-8-09-1:12	source ready for ops	36mA	580A	43/kW	6.2	32.3	300	155	48	46	antenna failure
		4-8-09-8:45		38mA	500A		6.2	32.8	300	149	48	46	
ext2-04-07-09	0.61	4-13-09-19:36	source ready for ops	35mA	520A	39/kW	6.2	33.9	500	155	48	46	pgun failure
ext1-04-09-09	0.56	4-19-09-21:03	two-layer antenna	35mA	540A	31.5/kW	6.2	28.7	0	145	48	46	
		4-20-09-10:03	edump resistor failure										routine source change

OAK RIDGE National Laboratory